Thermal Design (Vacuum) & Assembly Concepts

LSST Camera –Face-to-Face Meeting

17-18 October, 2005

BNL

Timothy S. Thurston

SLAC/TTC

Topics:

- CCD module/thermal strap analysis
- Thermal system vacuum analysis
- Camera assembly concept

CCD Module Thermal Strap Analysis Summary

- Thermal Configurations :
  - Basic CCD Module
    - 42x42mm x .15mm CCD,
    - 1mm, 3mm, & 5mm AlN mount plates
    - .01mm epoxy bonds
    - 2 – 80 pin connectors and cables
    - 1 or 2 Cu thermal straps
    - Connector and thermal straps, solder/braze connected to AlN
  - Thermal Parameters:
    - -100º C center point CCD temperature
    - .70 Watts radiation on CCD surface
    - .08 Watts generated on two CCD edges (overhangs)
    - .78 Watts extracted from thermal Straps
  - Analysis configurations
    - Single thermal strap center location, AlN #2 connected
    - Double thermal straps, AlN #2 connected (outside of 80-pin connecters)
    - Double thermal straps, AlN #3 connected (Inside walls of AlN #3 stiffener)
    - Double thermal straps, AlN #2 connected with thick AlN #2
    - Double thermal Straps, AlN #3 connected (Inside walls of AlN #3 stiffener), Reduced CTC

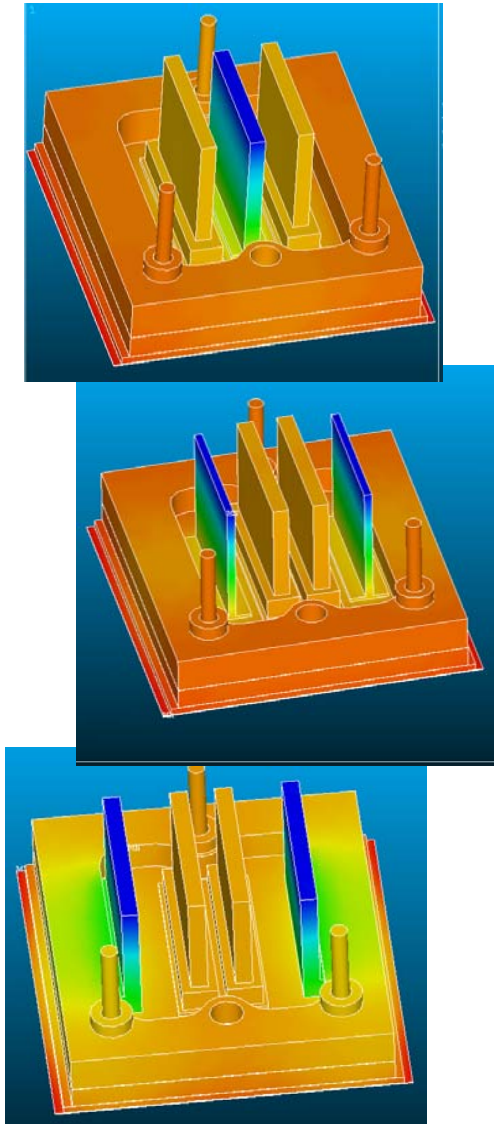

Thermal Model - Case Comparisons

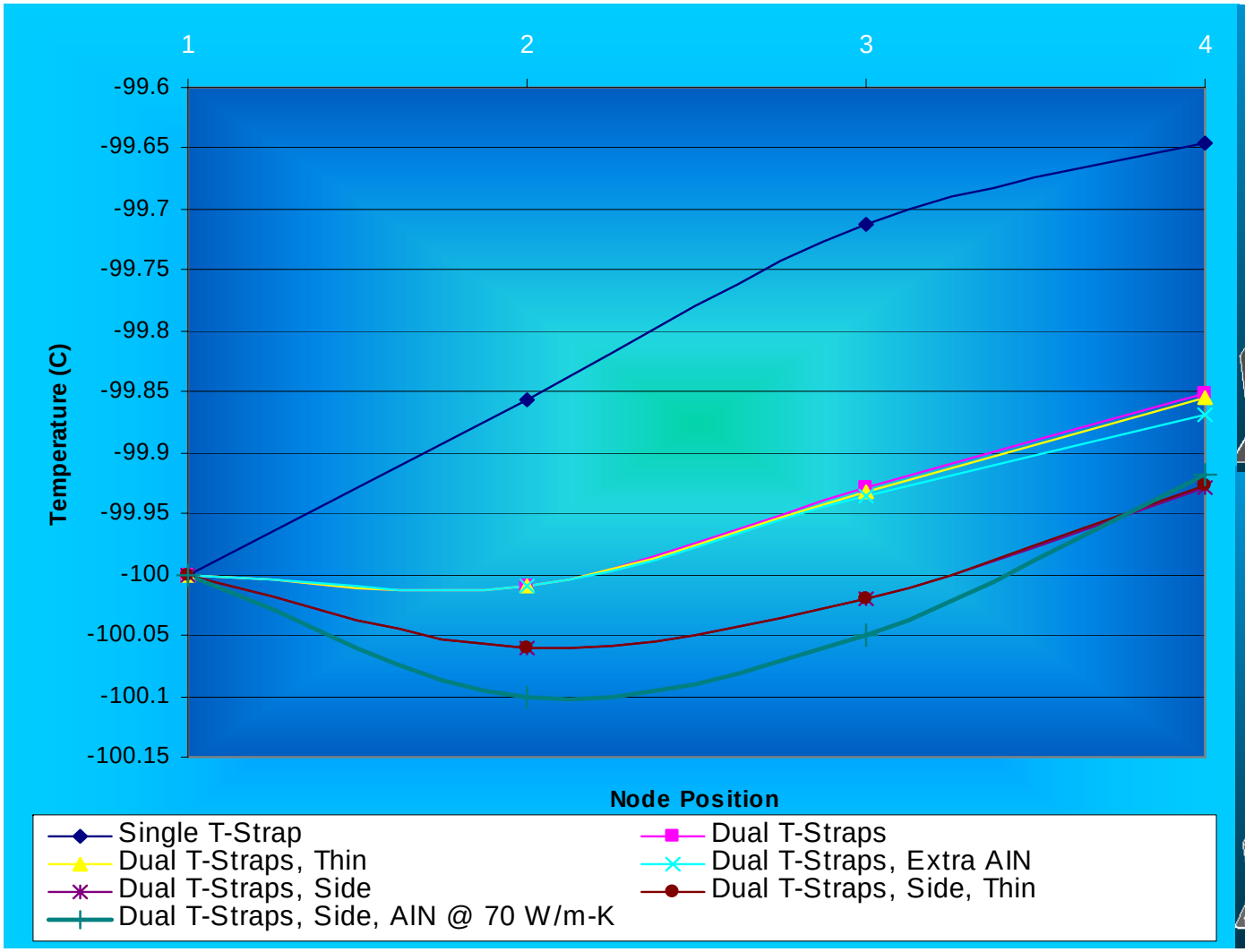

Nodal Positions

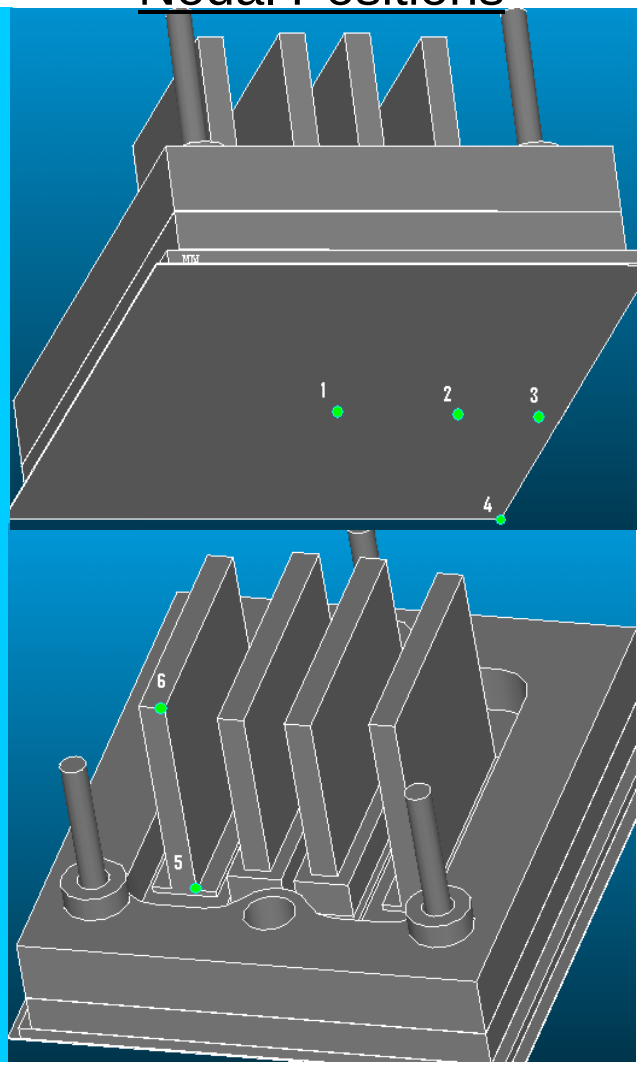

Camera Thermal System – Objectives

- Control detector surface temperature by removal of radiative and generated heat from sensor.
- Provide temperature uniformity of the individual detectors and the entire focal plane
- Provide continuous thermal stability
- Minimize thermal impact on FP mechanical requirements (flatness and stability)
- Minimize impact on telescope operations (vibration, Field of view, etc)
- Maximize operational -ilities

Camera Thermal System – Overview

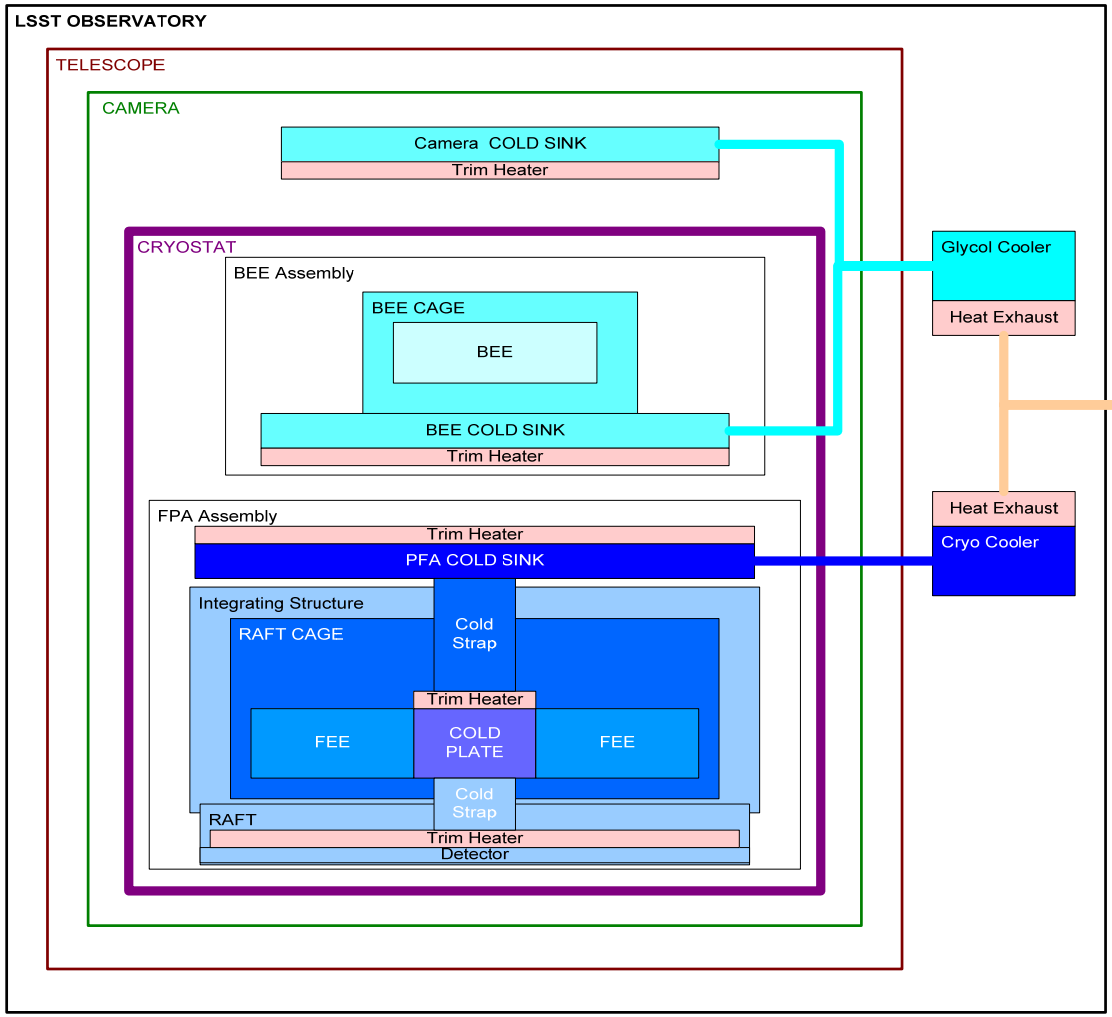

Features:

- Thermal control of detector temperature at either single or raft detector level
- Integrating structure and detectors maintained at common temperature.
- All detectors and FEE heat extracted through raft cage
- BEE controlled on separate thermal loop
- Camera internal environment control and dry
- Cryostat, BEE and FPA held vacuum to minimize heat gain

Cryostat Vacuum Configruation

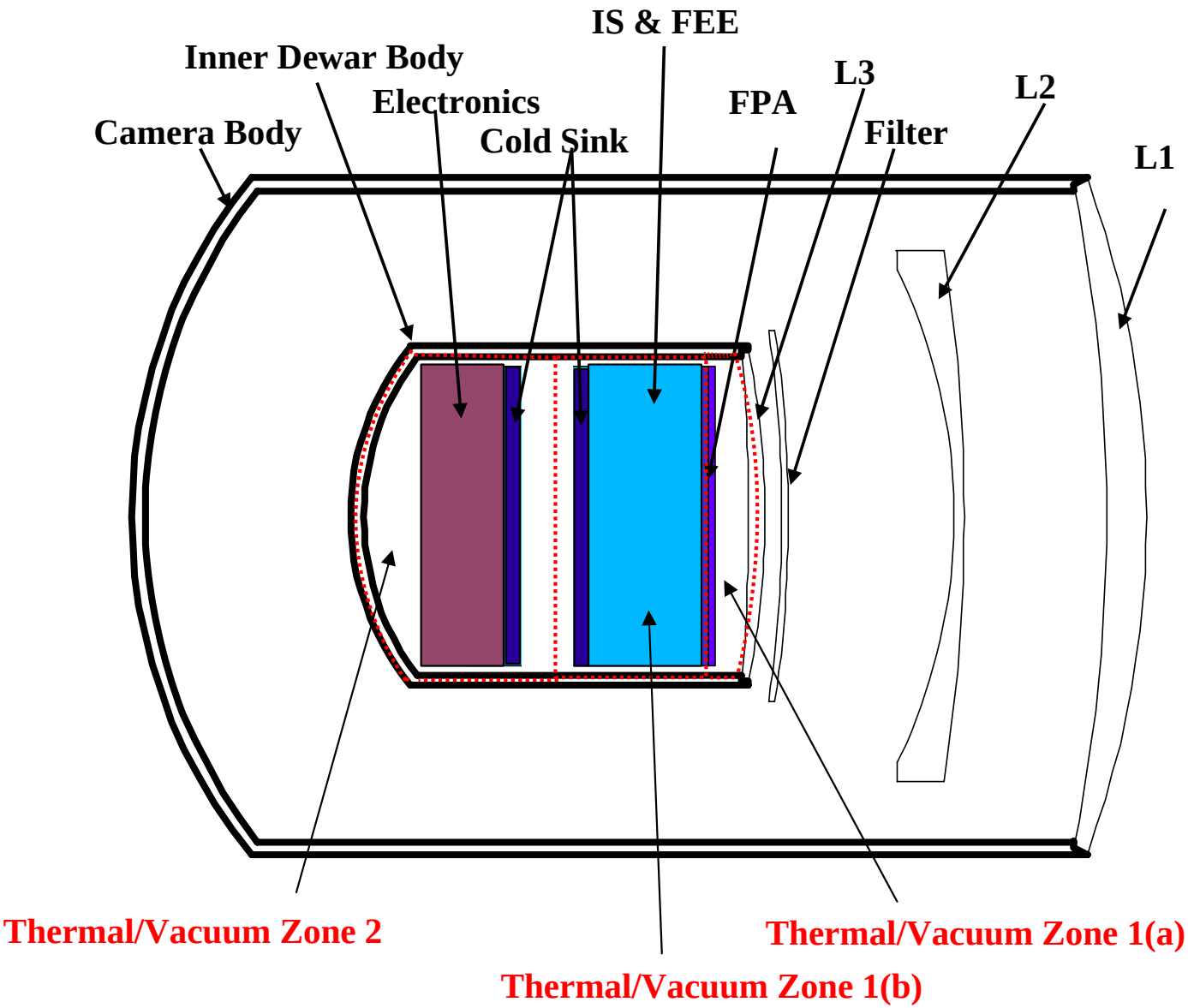

Thermal/Contamination – Control Concept

- **System configuration**
  - **Pumping :**
    - **Roughing/Conditioning: supplemented with cryo pumps/traps for initial pump down, valved-off and disconnected thereafter.**
    - **Vacuum Maintenance: continuous pumping via getters and Ion gauges, configured for regeneration**
  - **Contamination control: controlled zone purge, pump regeneration capability, cryo/getter traps between thermal zones 1(a), 1(b), & 2 , detector, raft, and IS skirts to establish thermal/vacuum zones.**

Thermal/Vacuum Zone 1 Barrier

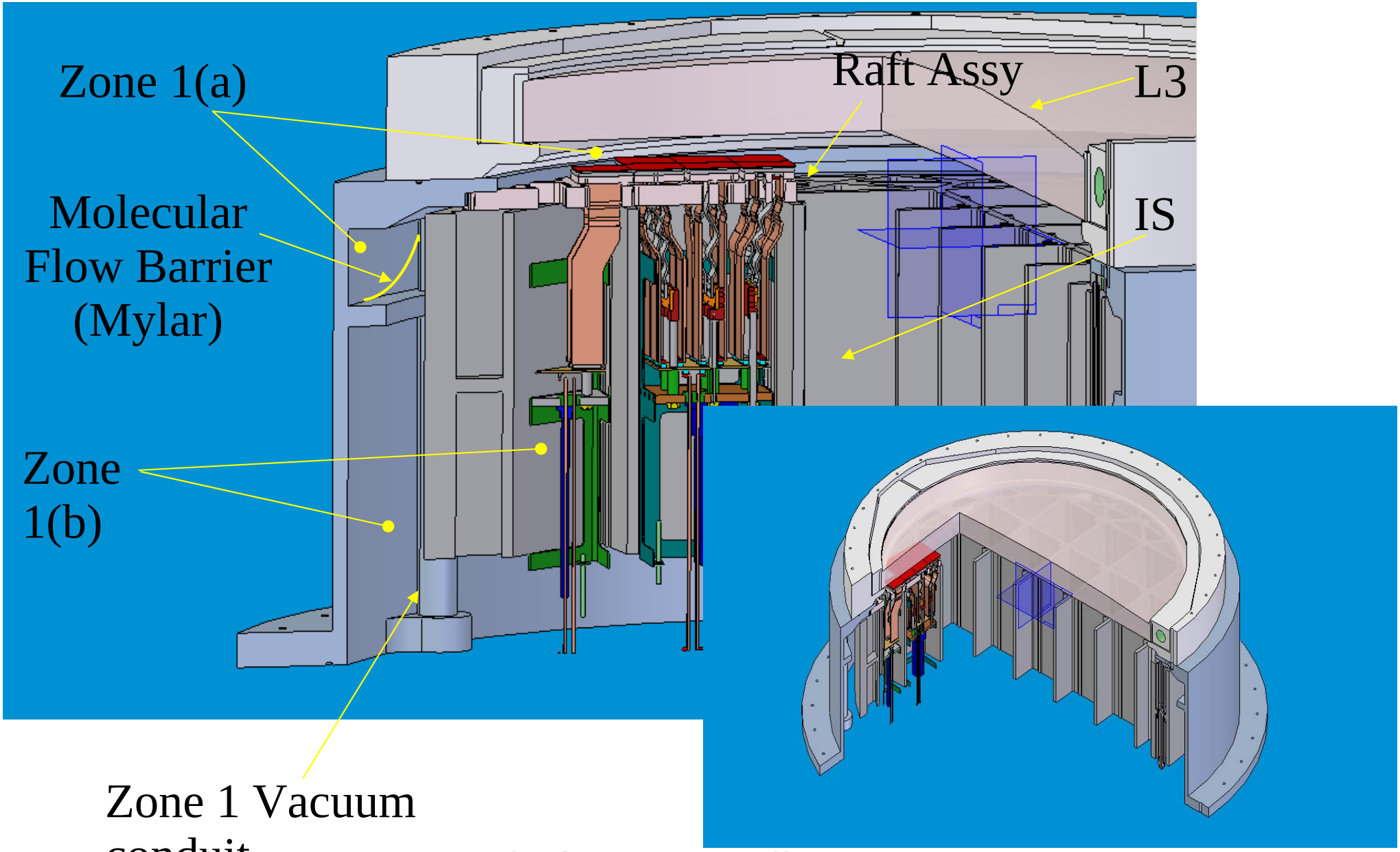

Raft/Sensor MF Barriers

Cut-away of Raft Assembly installed in IS

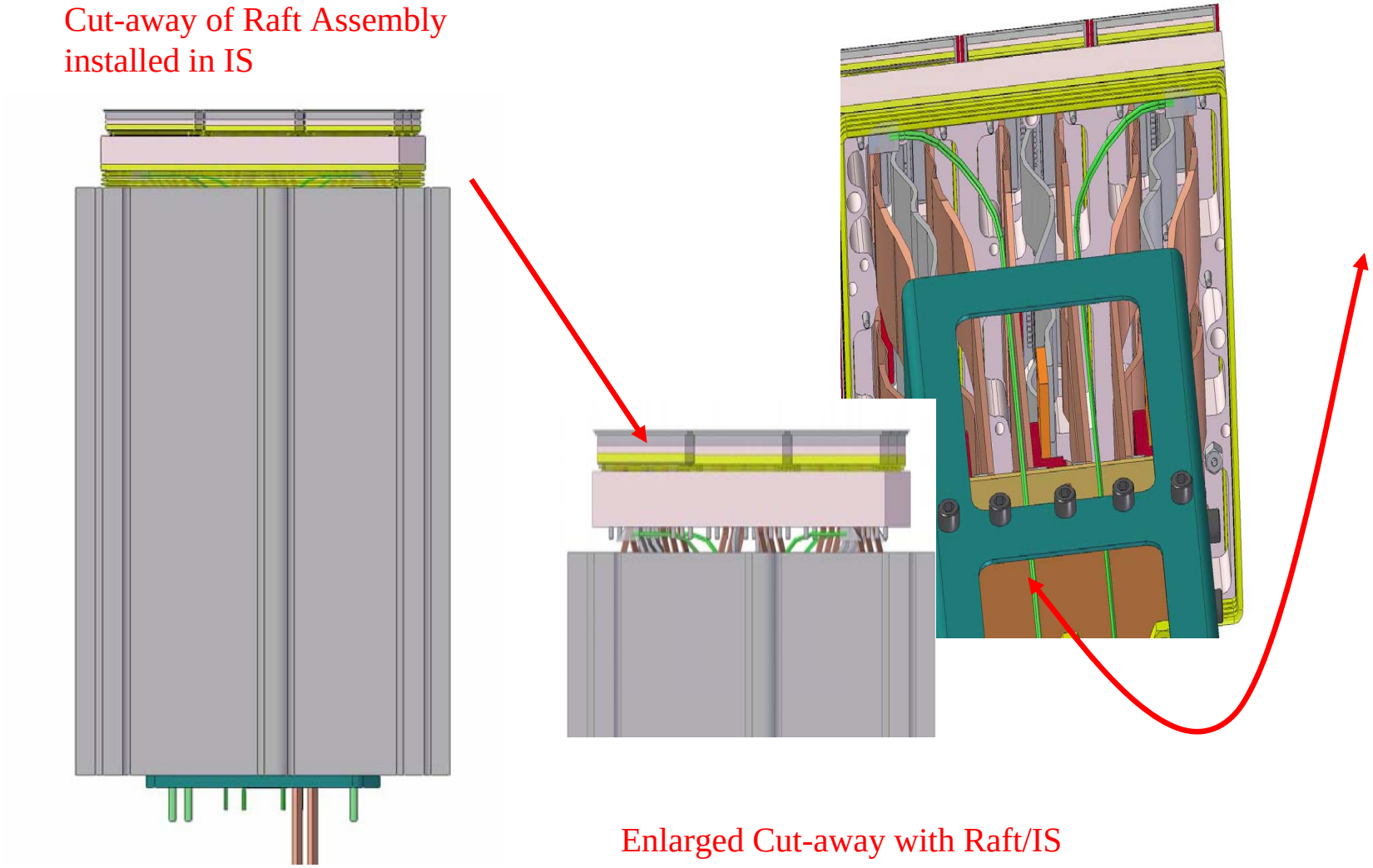

Enlarged Cut-away with Raft/IS Barrier removed.

Cryostat Material Survey

	Camera Surfaces/Area Exposed to Vacuum							
	All Zones		Zone 1(a) Area		Zone 1(b) Area		Zone 2 Area	
	Area(m^2)	Vol(m^3)	Area(m^2)	Vol(m^3)	Area(m^2)	Vol(m^3)	Area(m^2)	Vol(m^3)
Ag/Sn/Cu	6.8355	0.00204	0	0	6.8355	0.00204	0.0000	0
Al	5,750.2572	0.00177652	25.7620987	0.0000328	5,603.3847	0.00155271	121.1104	0.00019101
AlN	2.2543	0.002048	1.8944	0.002048	0.3599		0.0000	0
Cu	11,283.0614		0		11,282.1503		0.9111	
Dacron	1.1495	1.7765E-05	0.00515221	3.28E-07	1.1207	1.5527E-05	0.0237	1.9101E-06
G10/Conf	10.7126	0.00042076	0	0	4.5920	0.00018075	6.1207	0.00024001
Glass	0.8639		0.86393798		0.0000		0.0000	
Mylar	2,863.1422	0.00784172	0.00515221	0.000082	2,803.4078	0.00356871	59.7293	0.00419101
Plastic	3.1181	0.001516	0	0	2.3101	0.001116	0.8080	0.0004
Silicon	0.3599	3.5986E-05	0.359856	3.5986E-05	0.0000	0	0.0000	0
SiC	5.6250	0.02636719	2.8125	0.01318359	2.8125	0.01318359	0.0000	0
SS 416	12.0464		1.5754773		1.5683		8.9010	
Titanium	0.7098		0		0.5933		0.1166	

Vacuum Levels

	Outgassing rate (10 hrs in vacuum/clean/baked)			
	All Zones Area	Zone 1 Area	Zone 2 Area	Zone 3 Area
	W	W	W	W
Watts	0.00678254	0.00167765	0.00440841	3.0599E-05
Torr-L/sec	0.05019078	0.01241462	0.03262223	0.00022643
Pressure (Torr) @ 500L/S pumping	0.00010038	2.4829E-05	6.5244E-05	4.5286E-07
Pressure (Torr) @ 1000L/S pumping	5.0191E-05	1.2415E-05	3.2622E-05	2.2643E-07
Pressure(Torr) @ 5000L/S pumping	1.0038E-05	2.4829E-06	6.5244E-06	4.5286E-08

Vacuum Recommendations

- Bake-out where ever possible. (Mylar, conformal coating, plastics, ceramics)
- Low-to-no humidity handling procedures for all cryostat parts.
  - Cleaning procedures
  - Inert operating, test and storage environments
- Material selection
- Material processing control

Assembly Concept

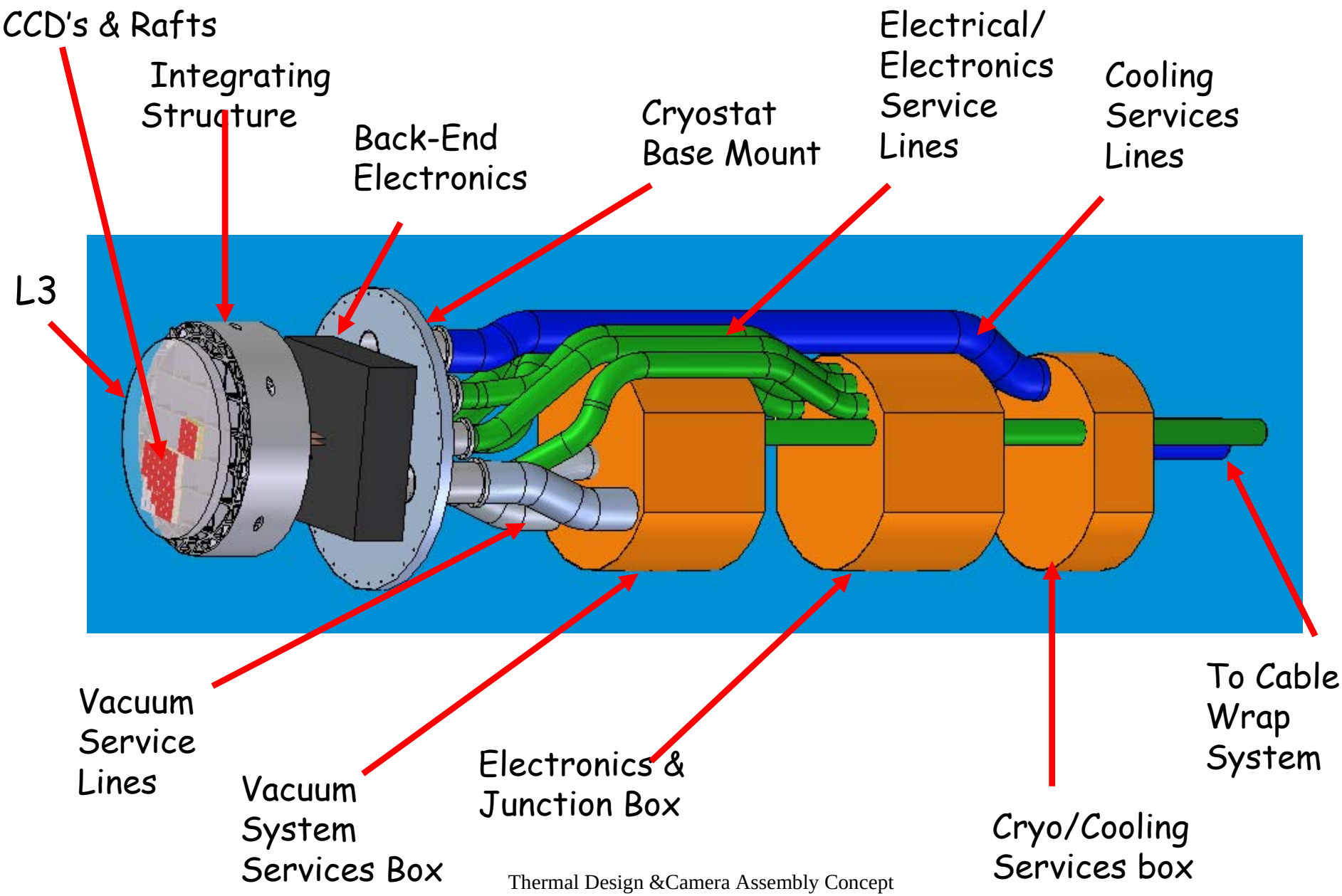

Assembly Concept (Cont)

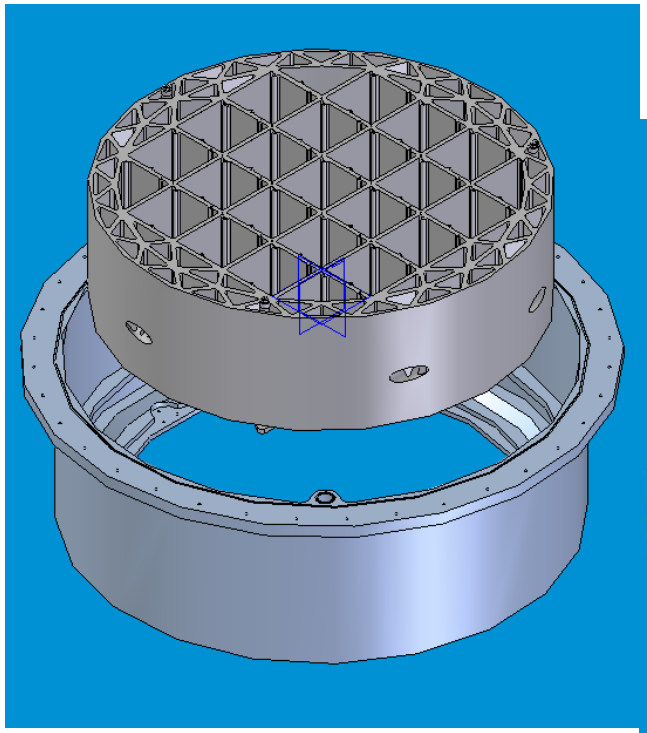

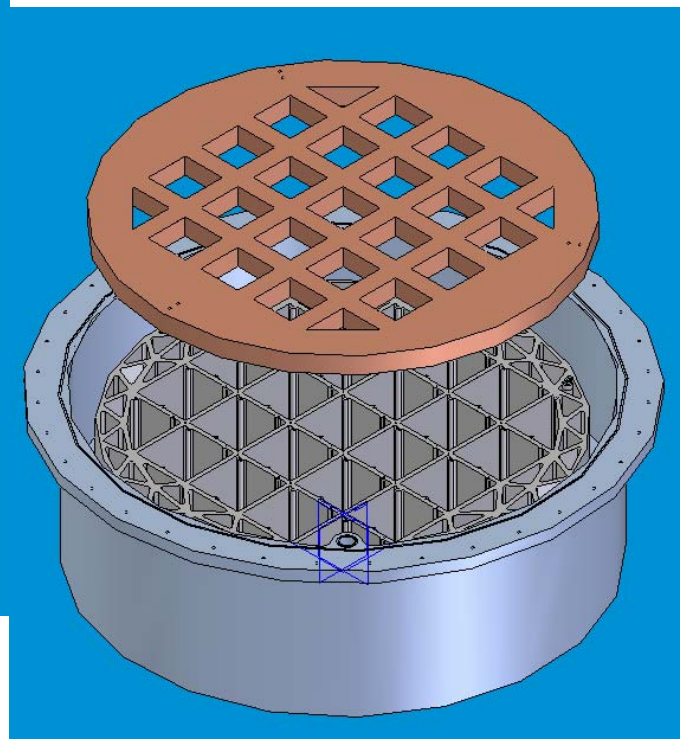

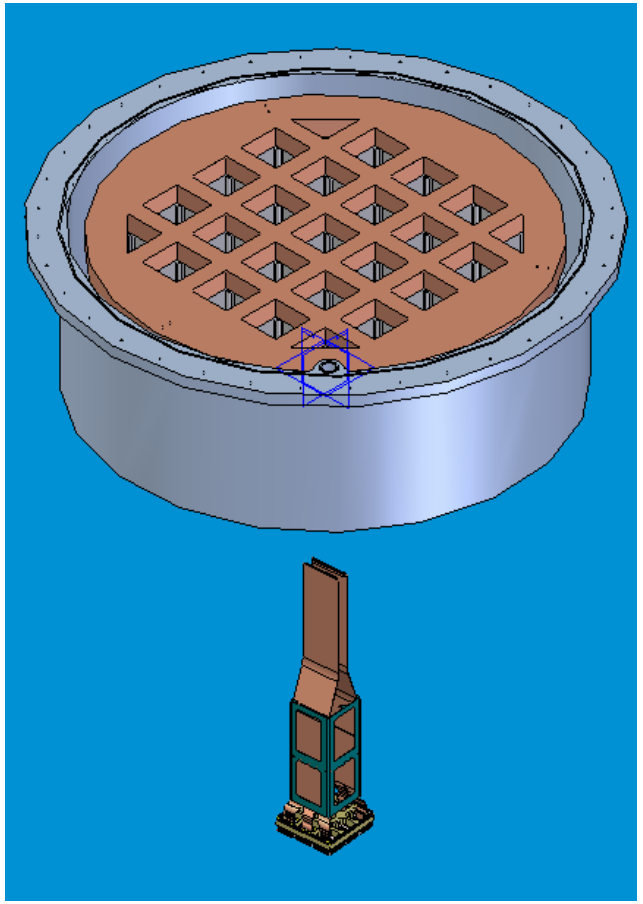

Cryostat Assembly Concept –
FPA Cryo Module

Assembly Concept (Cont)

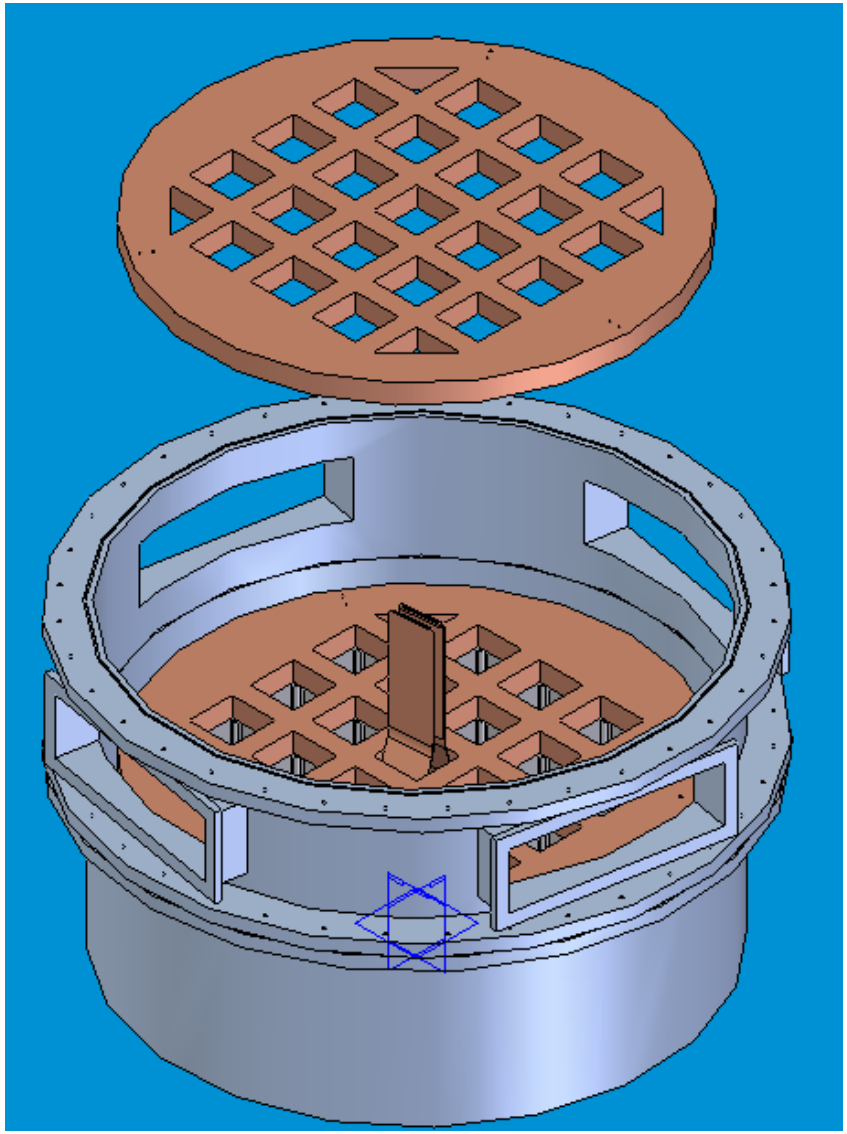

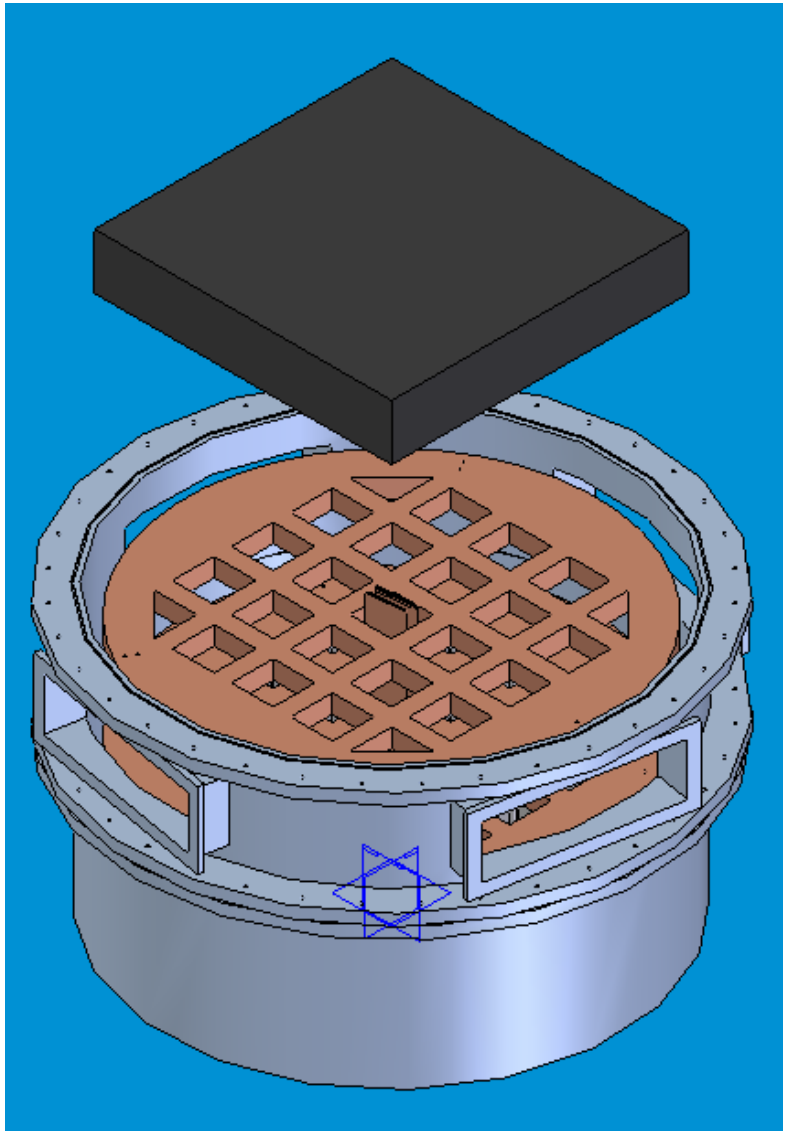

Cryostat Assembly Concept – FPA/BEE Cryo Module

Assembly Concept (Cont)

Assembly Flow

- Pre-assembled &Tested
  - Rafts
  - L3 Lens Assembly
  - Front-End Electronics
  - Back-End Electronics
  - Integrating Structure
  - Vacuum & Cooling System
  - Interface Electronics
  - Cryostat Components
- Cryostat Integration & Test
  - Complete Imaging System
  - Imaging Module loosely coupled remaining Camera systems

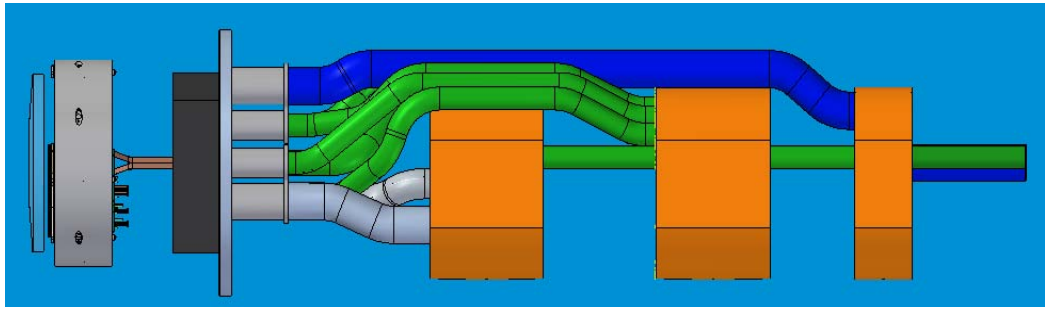

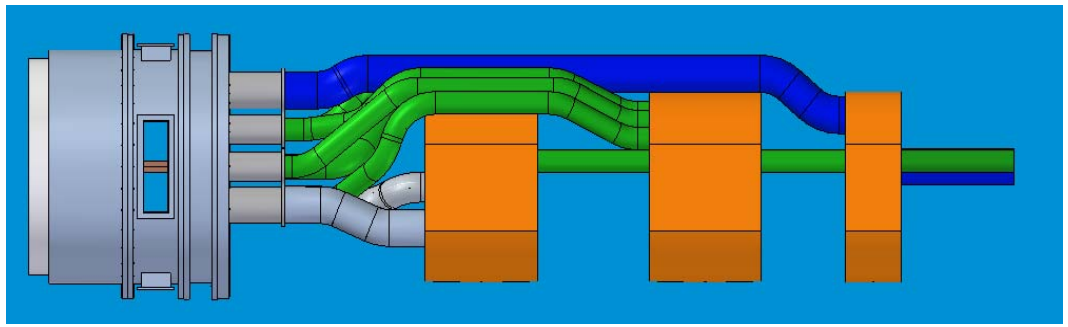

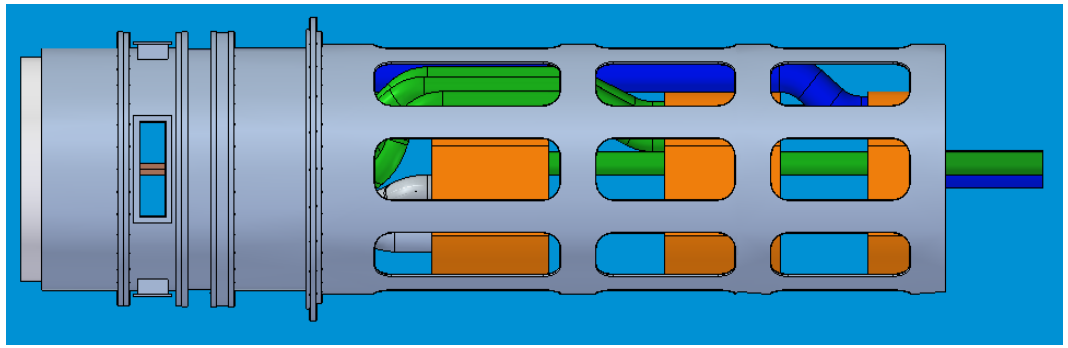

Assembly Concept (Cont)

Assembly Flow (Continued)

- Shutter & Filter Assembly
  - Maybe assembled in Camera Body without Cryostat – Imager could be installed after Filter Change and Shutter Assembled & Tested
  - L2 and L1 in second element of camera body
  - Shutter & Filter controls, instrumentation integrated at Cryostat insertion.

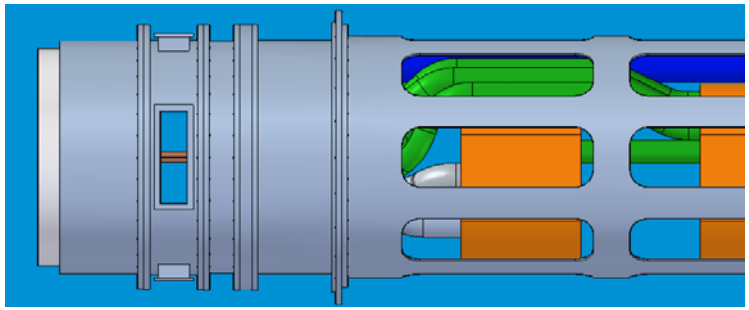

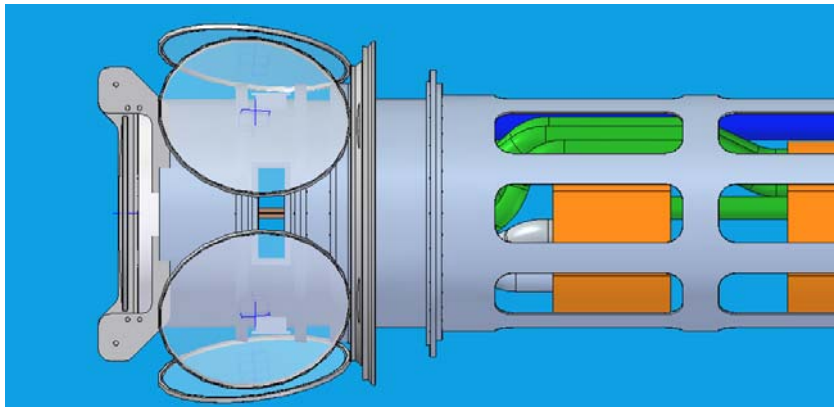

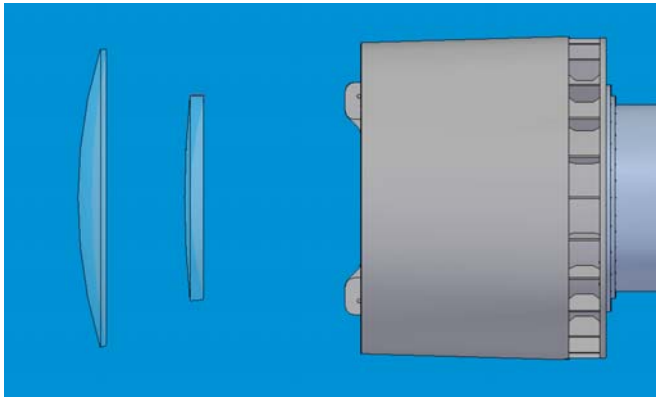

Assembly Concept (Cont)

Assembly Flow (Continued)

- L1 & L2 Lens Module
  - Lens integrating module provides light weight, ridged platform for stationary lens configuration.
  - Module attached to Cryostat/Shutter/Filter Assembly to complete Camera Module
  - Complete systems test of Camera Systems.

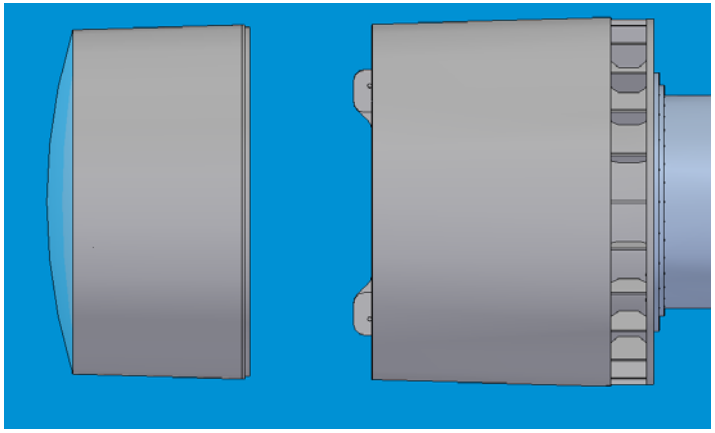

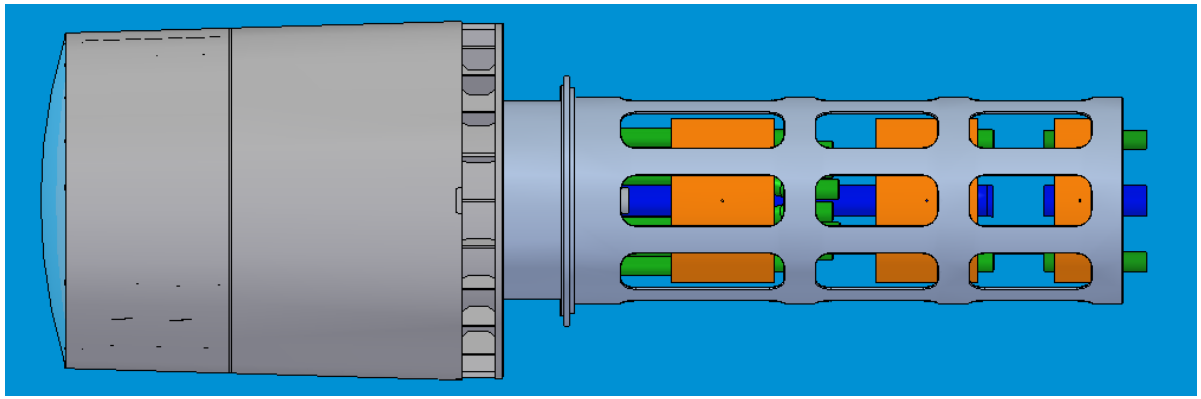

Assembly Concept (Cont)

Telescope Integration
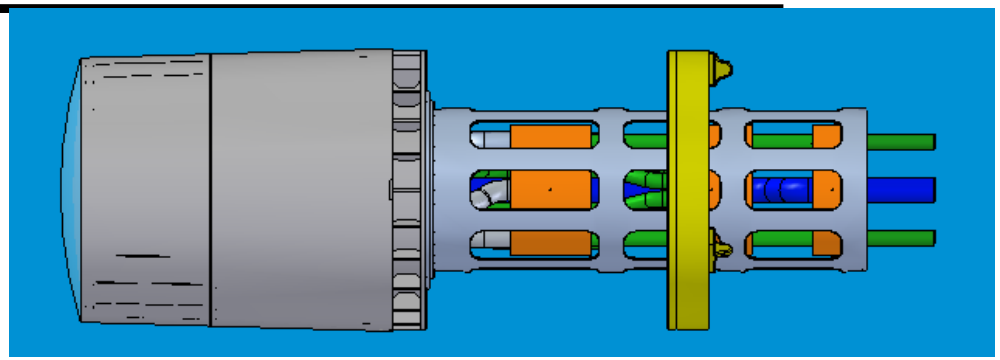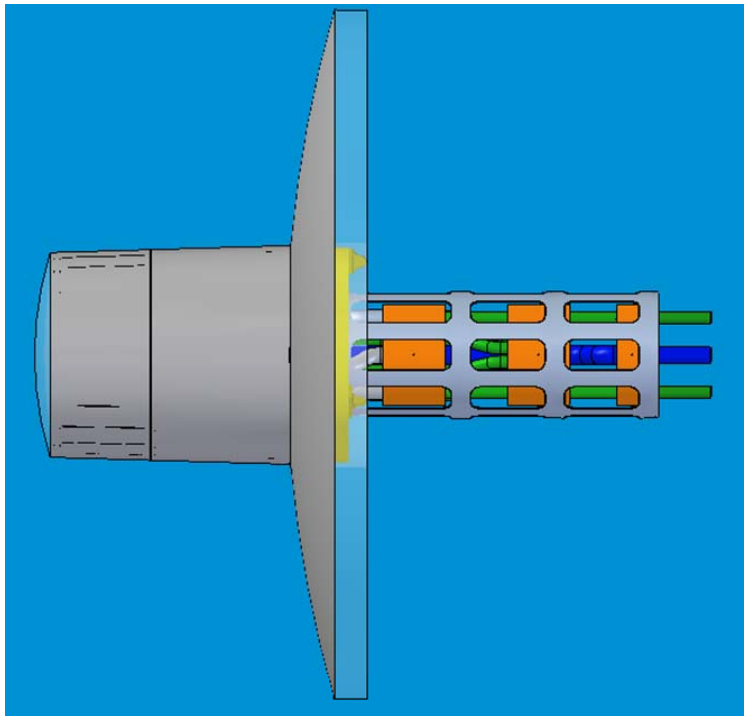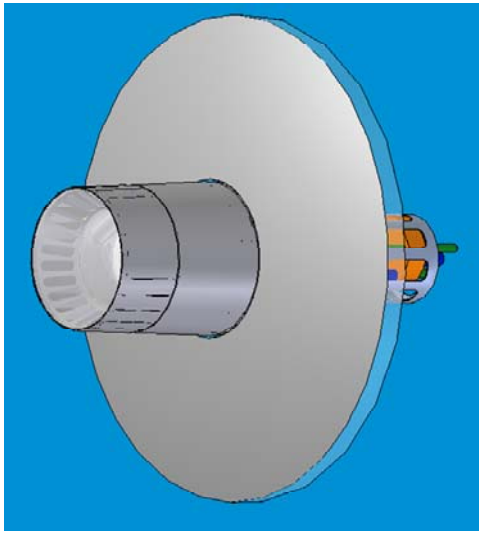
- Rotator Collar can be preinstalled on camera body
- Camera Hexapod attachment and pre-fit
- Camera Module insertion through M2