Camera Body
mechanical design

Layton Hale

Lawrence Livermore National Laboratory
7000 East Avenue, L-792
Livermore, California 94550
e-mail: hale6@llnl.gov

Large Synoptic Survey Telescope

LSST Camera Meeting
October 17-18, 2005

This work was performed under the auspices of the U.S. Department of Energy by Lawrence Livermore National Laboratory under contract No. W-7405-Eng-48.

Outline

- Component list and mass estimate
- Latest thinking on mechanisms
  - L2 actuation
  - Filter changer
  - Shutter
  - Image-stabilization actuators
- Front-end optic assembly (L1 & L2)
- Focal plane build/assembly strategy
- Priorities for FY06

The component list contains estimates of mass and cg location for parts and computes totals for assemblies

	F	G	H	I	J	K	L	M	N	O	P	Q	R
1	**Camera Component List**	**Qty**	**Size description**	**Volume**	**Density**	**Mass per item**		**Total Mass**		**Zcg w.r.t. FP**		**M*Zcg**	
2	Last changed on October 5 2005		(mm)	(l)	(kg/l)	(kg)		(kg)		(m)		(kg-m)	
3						est. value	± tol.	est. value	± tol.	est. value	± tol.	est. value	± tol.
4	*Camera-Rotator-Hexapod ass'y*	*1*				*3557.0*	*382.2*	*3557.0*	*382.2*	*-0.361*	*0.068*	*-1284.3*	*279.0*
5	*Hexapod ass'y*	*1*				*486.5*	*46.0*	*486.5*	*46.0*	*-1.155*	*0.053*	*-561.9*	*59.0*
16	*Rotator ass'y*	*1*				*183.5*	*25.0*	*183.5*	*25.0*	*-1.022*	*0.066*	*-187.5*	*28.3*
20	*Camera ass'y*	*1*				*2887.1*	*378.6*	*2887.1*	*378.6*	*-0.185*	*0.091*	*-534.9*	*271.2*
21	*Camera housing ass'y*	*1*				*1061.5*	*365.3*	*1061.5*	*365.3*	*-0.577*	*0.151*	*-612.1*	*264.4*
26	*Utilities & peripherals*	*1*				*45.0*	*13.0*	*45.0*	*13.0*	*-1.000*	*0.289*	*-45.0*	*18.4*
30	*Front-end optics ass'y*	*1*				*649.8*	*29.0*	*649.8*	*29.0*	*0.799*	*0.006*	*519.1*	*23.5*
40	*Filter carousel ass'y*	*1*				*264.0*	*24.2*	*264.0*	*24.2*	*-0.500*	*0.051*	*-131.9*	*18.1*
51	*Filter changer ass'y*	*1*				*36.0*	*8.2*	*36.0*	*8.2*	*-0.200*	*0.046*	*-7.2*	*2.3*
58	*Shutter ass'y*	*1*				*23.0*	*6.1*	*23.0*	*6.1*	*0.185*	*0.133*	*4.3*	*3.3*
64	*Cryostat ass'y*	*1*				*807.8*	*90.4*	*807.8*	*90.4*	*-0.324*	*0.049*	*-262.0*	*49.0*
65	Cryostat housing	1	Ø 1000 x 800 x 10	25.1	7.8	196.0	39.2	196.0	39.2	-0.400	0.060	-78.4	19.6
66	L3 optic	1	Ø 730 x 60 max	22.1	2.2	48.6	0.5	48.6	0.5	0.055	0.005	2.7	0.2
67	L3 mount	1	1000 OD x 700 ID x 40	16.0	7.8	125.0	62.5	125.0	62.5	0.055	0.005	6.9	3.5
68	L3 clamp ring	1	Ø 730 x 25 x 25	1.4	7.8	11.2	2.2	11.2	2.2	0.070	0.014	0.8	0.2
69	Rear feedthru flange	1	Ø 1000 x 32	25.1	7.8	196.0	39.2	196.0	39.2	-0.750	0.150	-147.0	41.6
70	Back-end electronics	25				2.0	1.0	50.0	25.0	-0.500	0.200	-25.0	16.0
71	Image stabilization actuators	3				3.5	1.4	10.4	4.2	-0.125	0.025	-1.3	0.6
72	Image stab. position sensors	3	20 x 20 x 40	0.0	7.8	0.1	0.1	0.4	0.2	-0.125	0.025	0.0	0.0
73	*Focal plane subass'y*	*1*				*170.2*	*23.2*	*170.2*	*23.2*	*-0.121*	*0.017*	*-20.5*	*4.0*
74	Integrating structure	1	770 x 770 x 200		3.2	80.0	20.0	80.0	20.0	-0.125	0.025	-10.0	3.2
75	FPA support flexures	3				2.0	1.0	6.0	3.0	-0.125	0.025	-0.8	0.4
76	Cold sink / heat exchanger	1	12x (Ø 13 x 1 x 630)	0.3	8.9	2.7	1.1	2.7	1.1	-0.250	0.050	-0.7	0.3
77	*Raft subass'y*	*25*				*1.0*	*0.2*	*24.0*	*4.7*	*-0.016*	*0.004*	*-0.4*	*0.1*
78	Raft frame	1	120 x 120 x 20		3.3	0.4	0.2	0.4	0.2	-0.030	0.005	0.0	0.0
79	Sensor	9	40 x 40 x 10	1.6E-02	3.3	5.3E-02	1.1E-02	0.5	0.1	-0.005	0.001	0.0	0.0
80	Sensor mount	27	Ø 7 x 10	3.8E-04	8.0	3.1E-03	1.2E-03	0.1	0.0	-0.015	0.003	0.0	0.0
81	*Raft cage subass'y*	*25*				*2.3*	*0.4*	*57.4*	*10.4*	*-0.151*	*0.029*	*-8.7*	*2.3*
82	Cage frame	1	2x (100 x 200 x 6)	0.24	8.9	2.1	0.2	2.1	0.2	-0.140	0.040	-0.3	0.1
83	Thermal strap, sensor	18	25 x 2 x100	5.0E-03	8.9	4.5E-02	8.9E-03	0.8	0.2	-0.050	0.020	0.0	0.0
84	FEE board	6	100 x 160 x 1.6	2.6E-02	1.8	4.6E-02	9.2E-03	0.3	0.1	-0.030	0.010	0.0	0.0
85	flex cables, FEE sensor	18	30 x 30 x 0.13					0.0	0.0			0.0	0.0
86	flex cables, FEE to BEE	12	100 x TBD x 0.13					0.0	0.0			0.0	0.0

Total mass = 3600 ± 400 kg, Zcg w.r.t. FP = -360 ± 70 mm

Large Synoptic Survey Telescope

Latest thinking on mechanisms

- **L2 actuation may no longer be required for Lynn Seppala's design**
- **Filter changer**
  - **Use straight and curved track sections**
  - **Proposed method to change the filter complement**
- **Shutter**
  - **Two-sheet shutter**
- **Image-stabilization actuators**
  - **Consider variable-reluctance motors with mass counterbalance**

Prefer a track-based filter changer over linkages to maneuver the filter through the confines of the camera

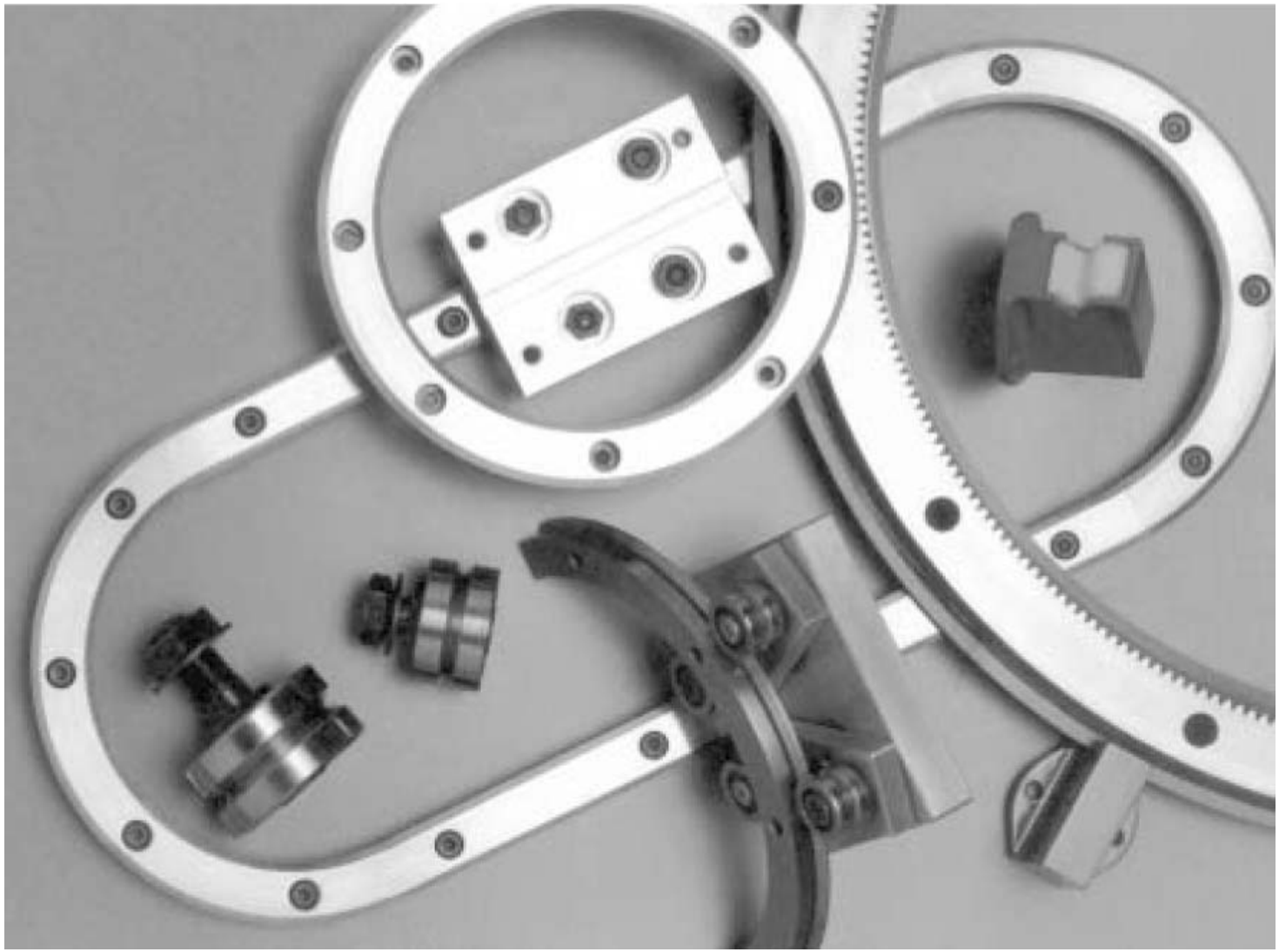

Standard bearing components from Bishop-Wisecarver

It's straightforward to piece together straight and curved tracks that a carriage can follow

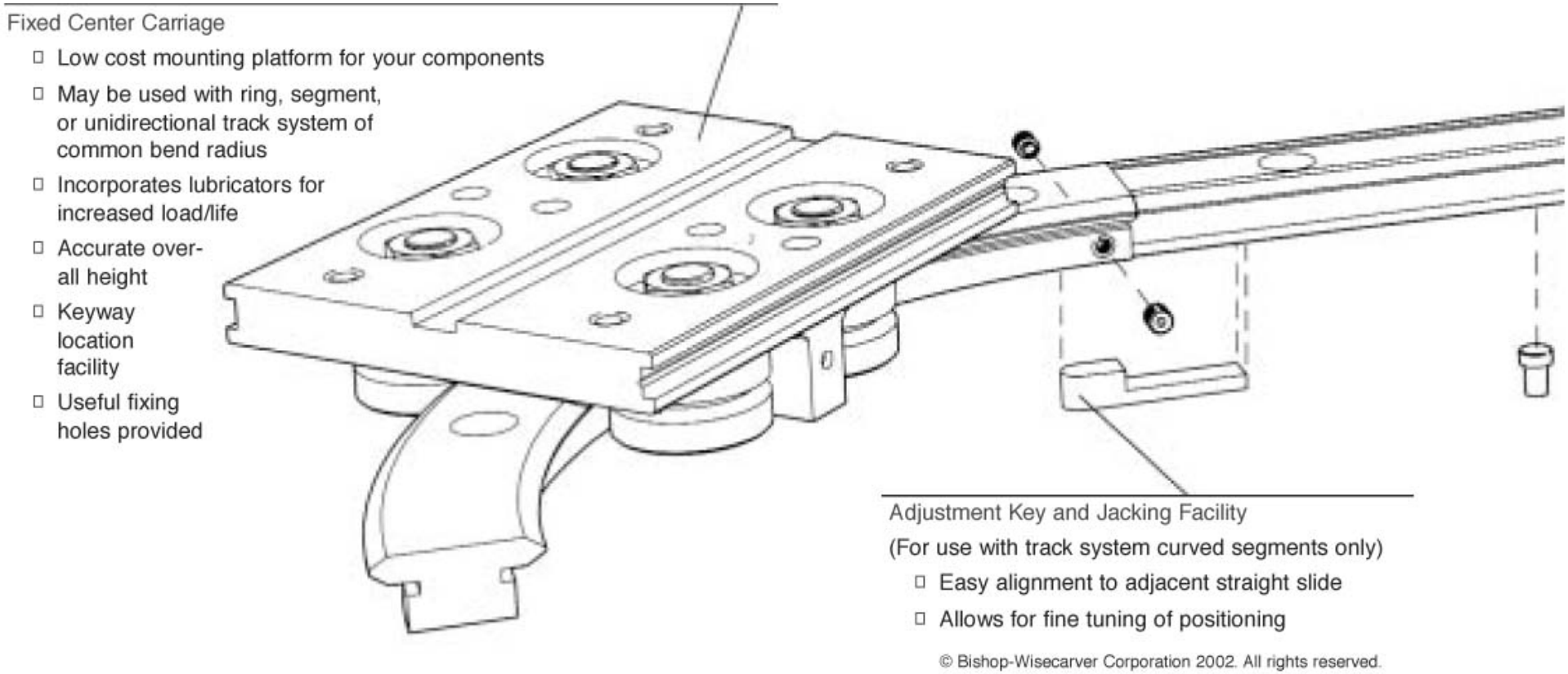

Motion of filter from carousel, to beam line, to change out

Filter location in carousel

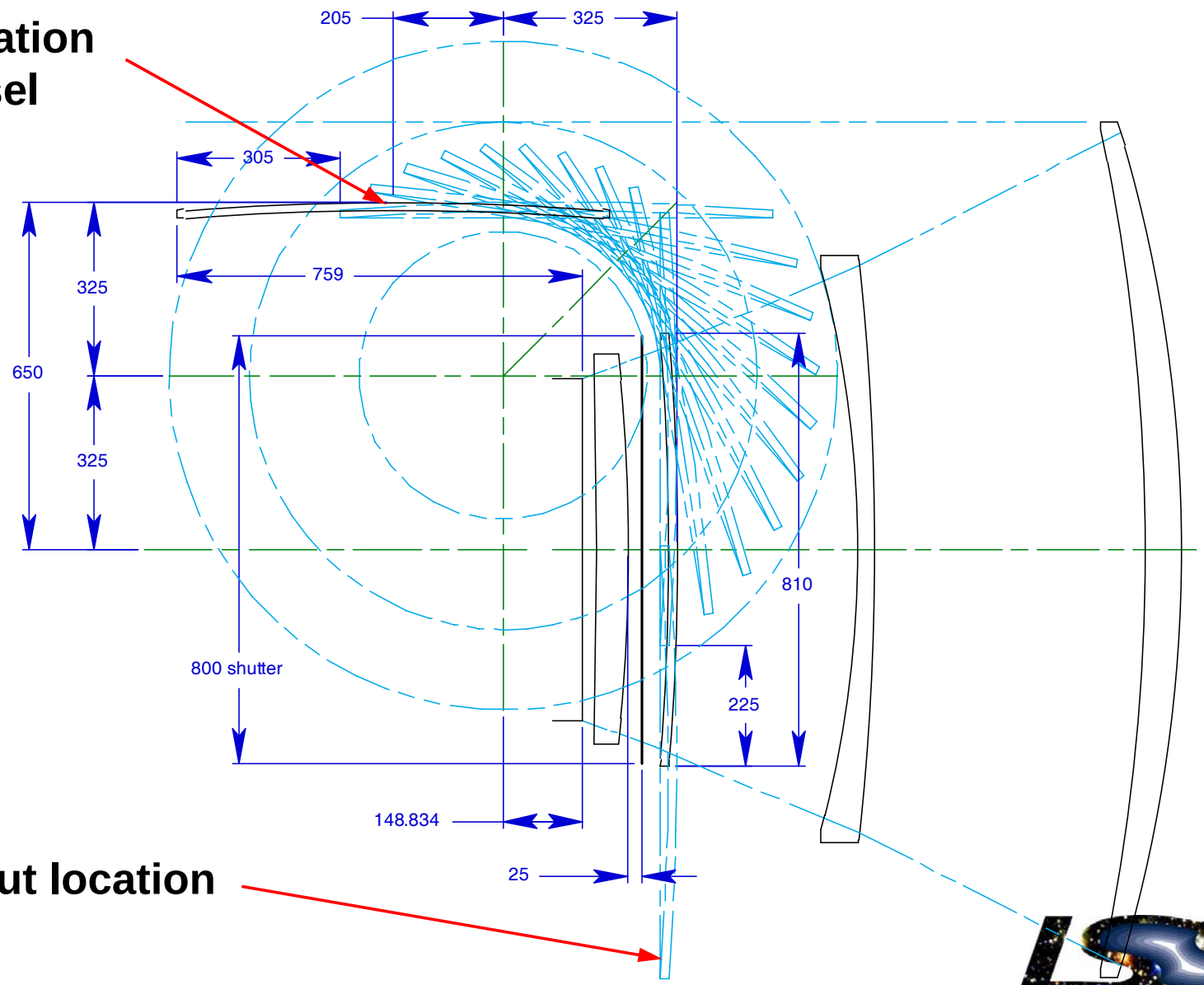

Change-out location

Large Synoptic Survey Telescope

Filters are 30 mm larger and further from L3 to provide needed space

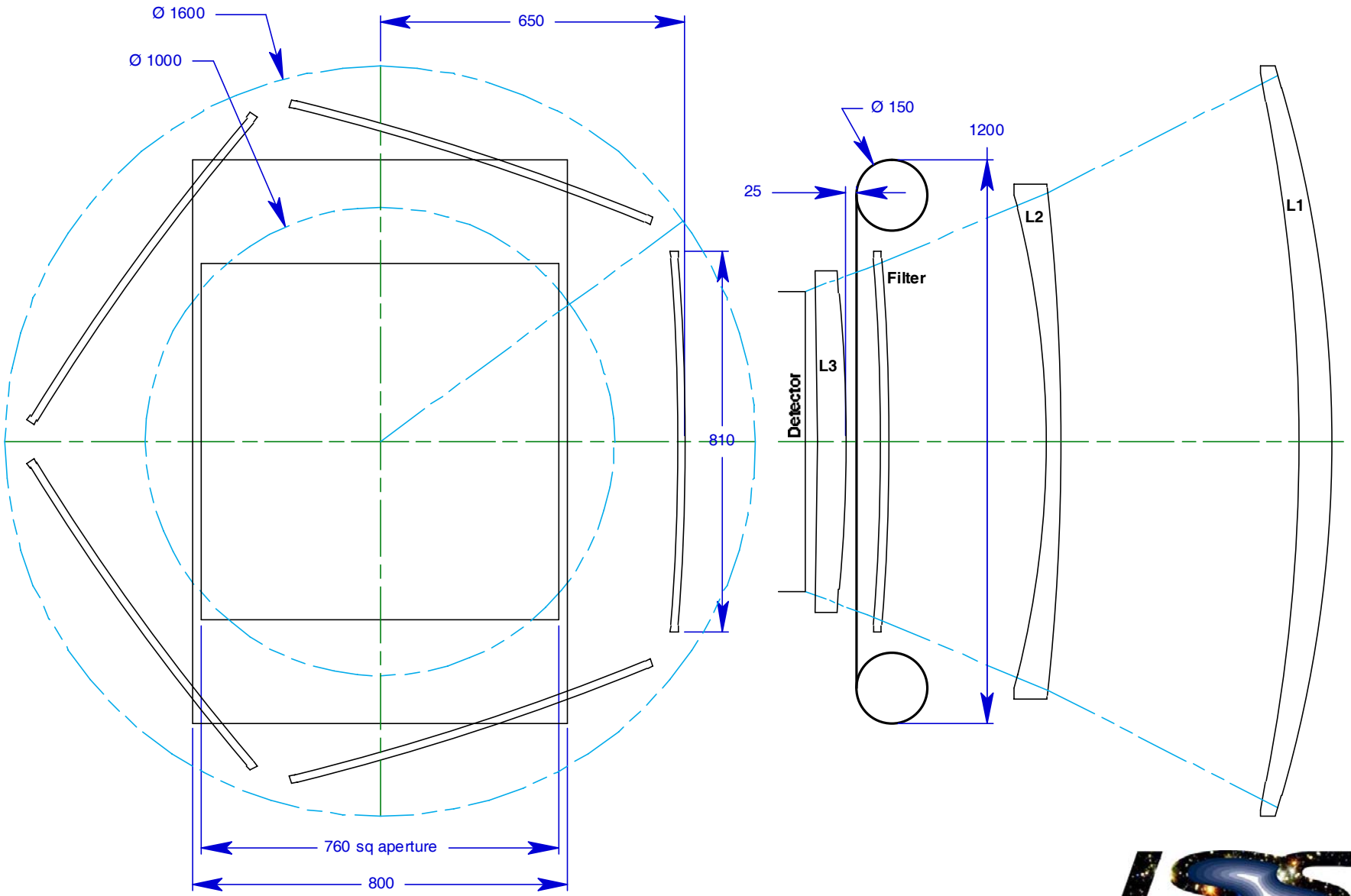

Two-sheet shutter allows a much shorter exposure time and simplifies several aspects of the design

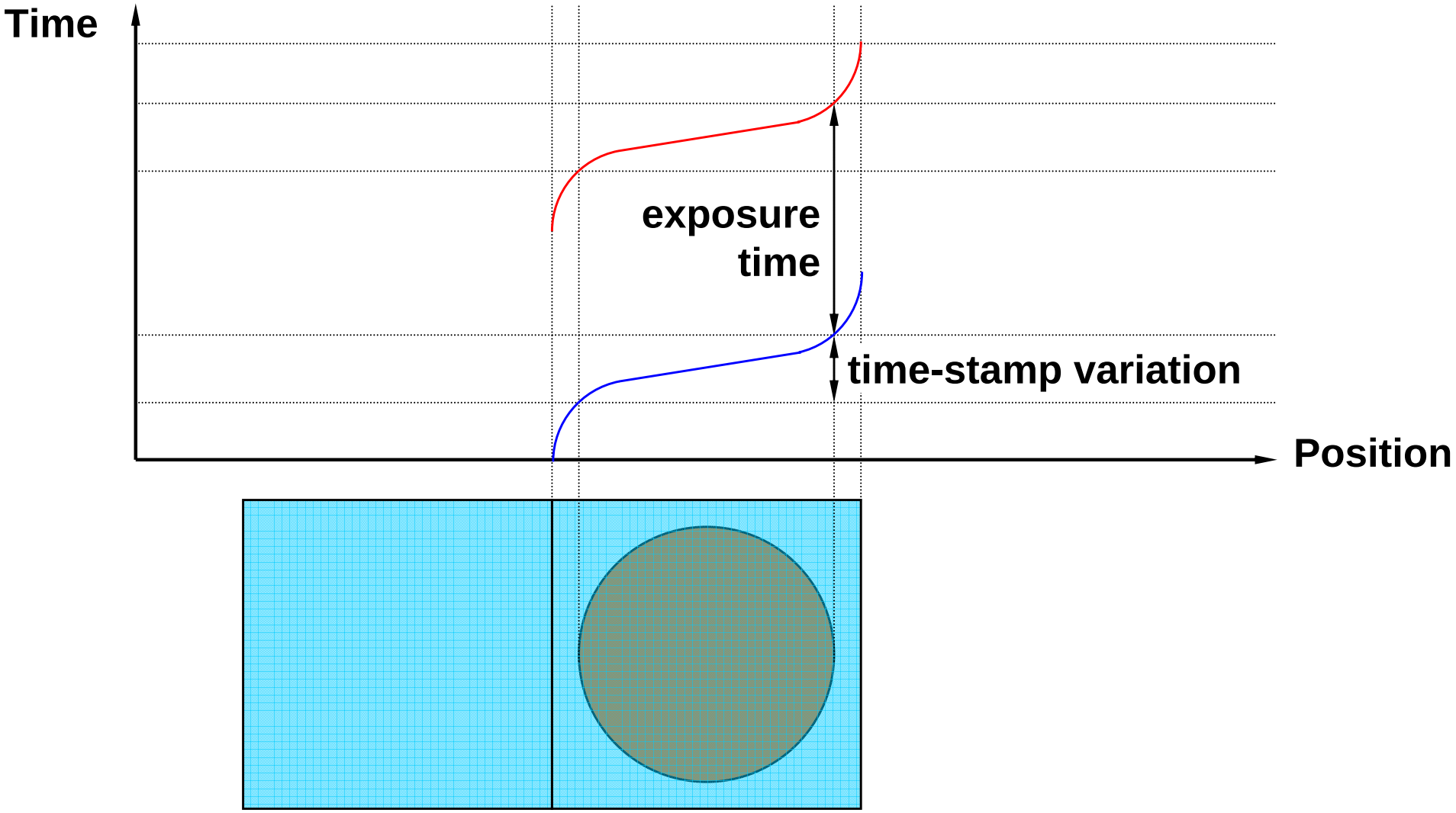

Reasons to favor two independent sheets:

- **Less total travel of sheets**
- **Edge stiffener doesn't have to roll up**
- **Simpler more robust sheets (avoid large rectangular aperture)**
- **May facilitate removal from the camera body**

The main challenge is in rolling up each sheet but I have several ideas to try. Some are very simple and some will work. Hopefully one very simple idea will work well.

Moving the focal plane array for image stabilization raises concerns about disturbance forces on the camera and top end

- **The actuators can be designed with mass counterbalance to largely eliminate disturbance forces**
- **Doing so obviously removes the gravity load on the actuators, making electromagnetic actuators more feasible**
- **Using a lever, the counterbalance mass may be reduced by the lever ratio, however the kinetic energy goes up by the same ratio**
- **The main mass of the actuator would be used for counterbalance**
- **The motion at the actuator is still relatively small so consider variable reluctance for greater power density**

Rick Montesanti at LLNL recently developed a fast-tool servo with 10 kHz bandwidth using a variable-reluctance motor

Finite element model of front-end optic assembly. Total mass is 650 kg using 10 Ga (.135”) steel walls and 1/2” steel flanges

L2 has 6 radial-motion flexures

6 adjustable attachments to camera body

3 beams spread load to 6 plcs on housing

L1 has 18 radial-motion flexures

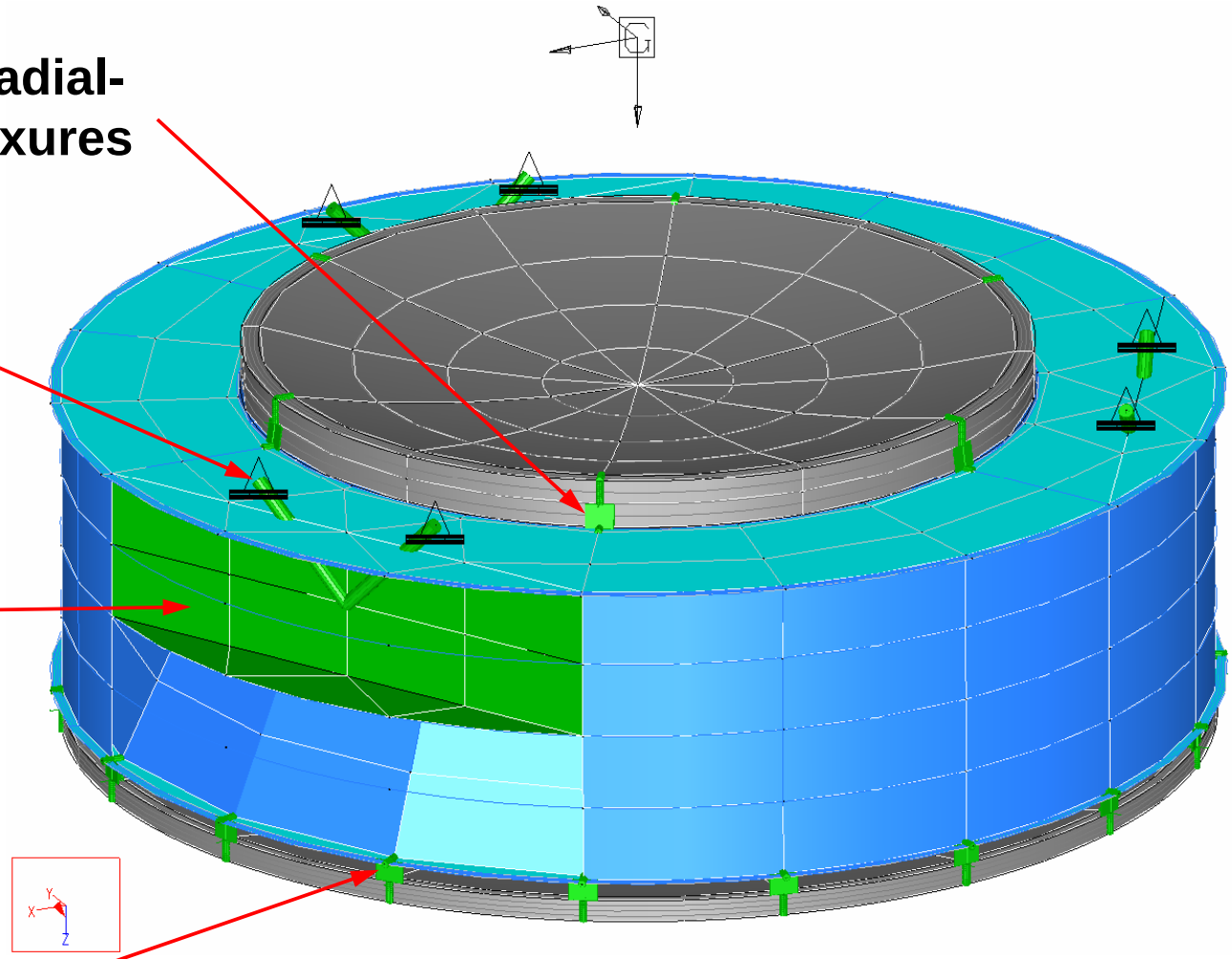

First four *suspension* modes on the kinematic support

Mode 2
89 Hz

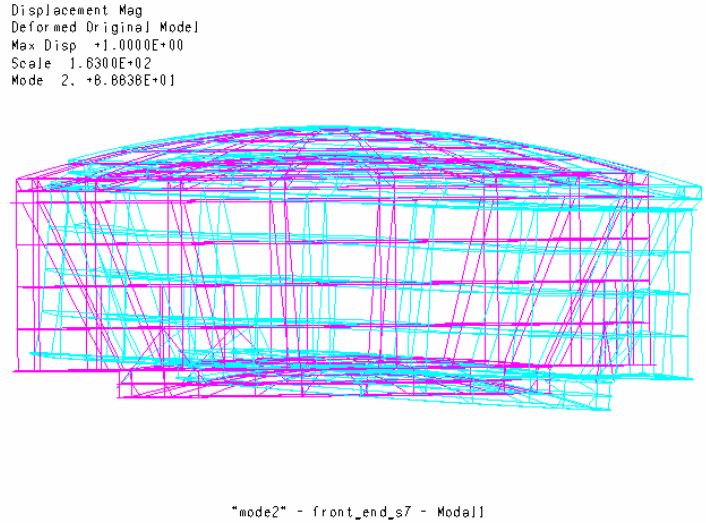

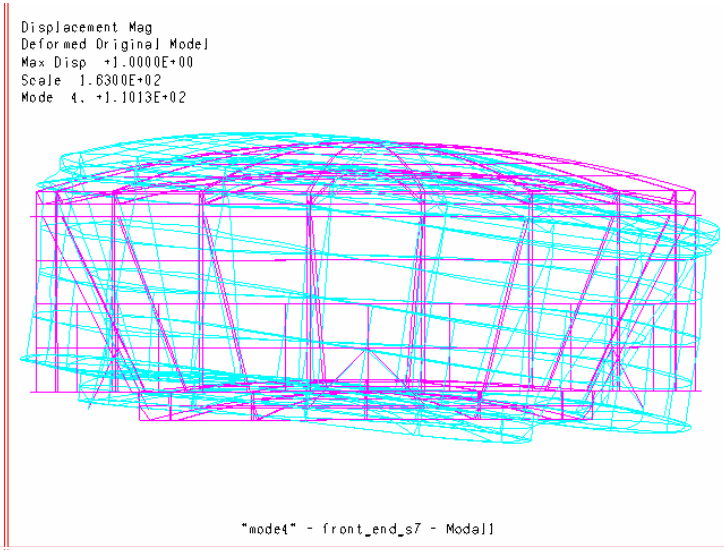

Mode 4
110 Hz

Mode 1
89 Hz

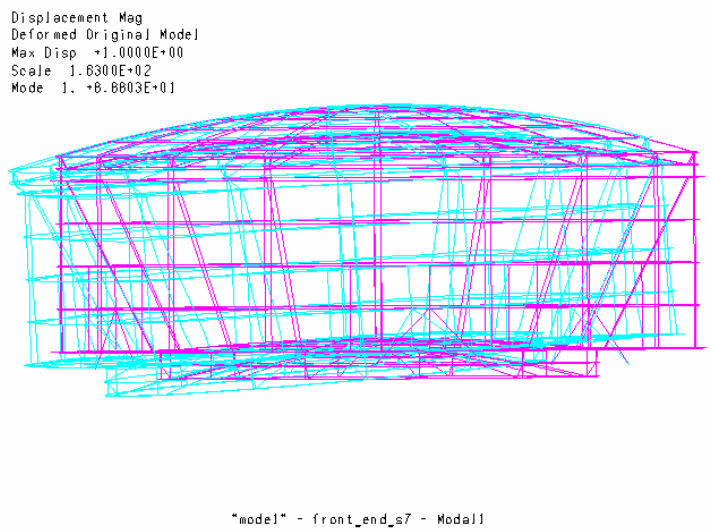

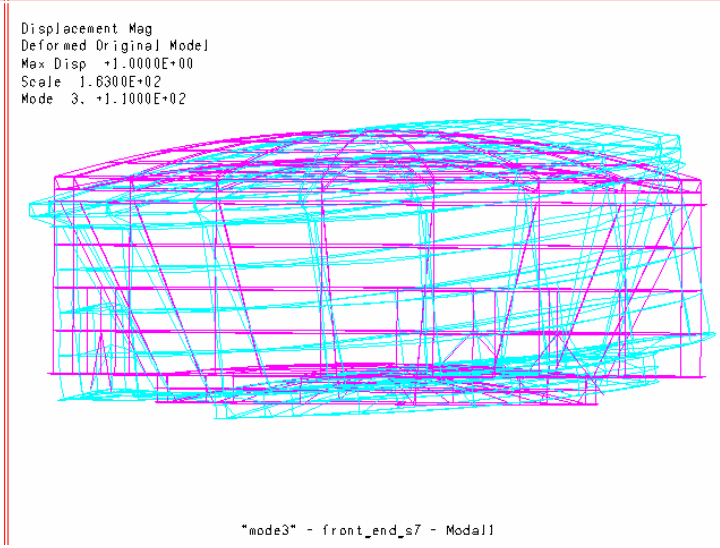

Mode 3
110 Hz

Contour plot showing Z displacement of L1 under 1g Z load (values appear on next slide)

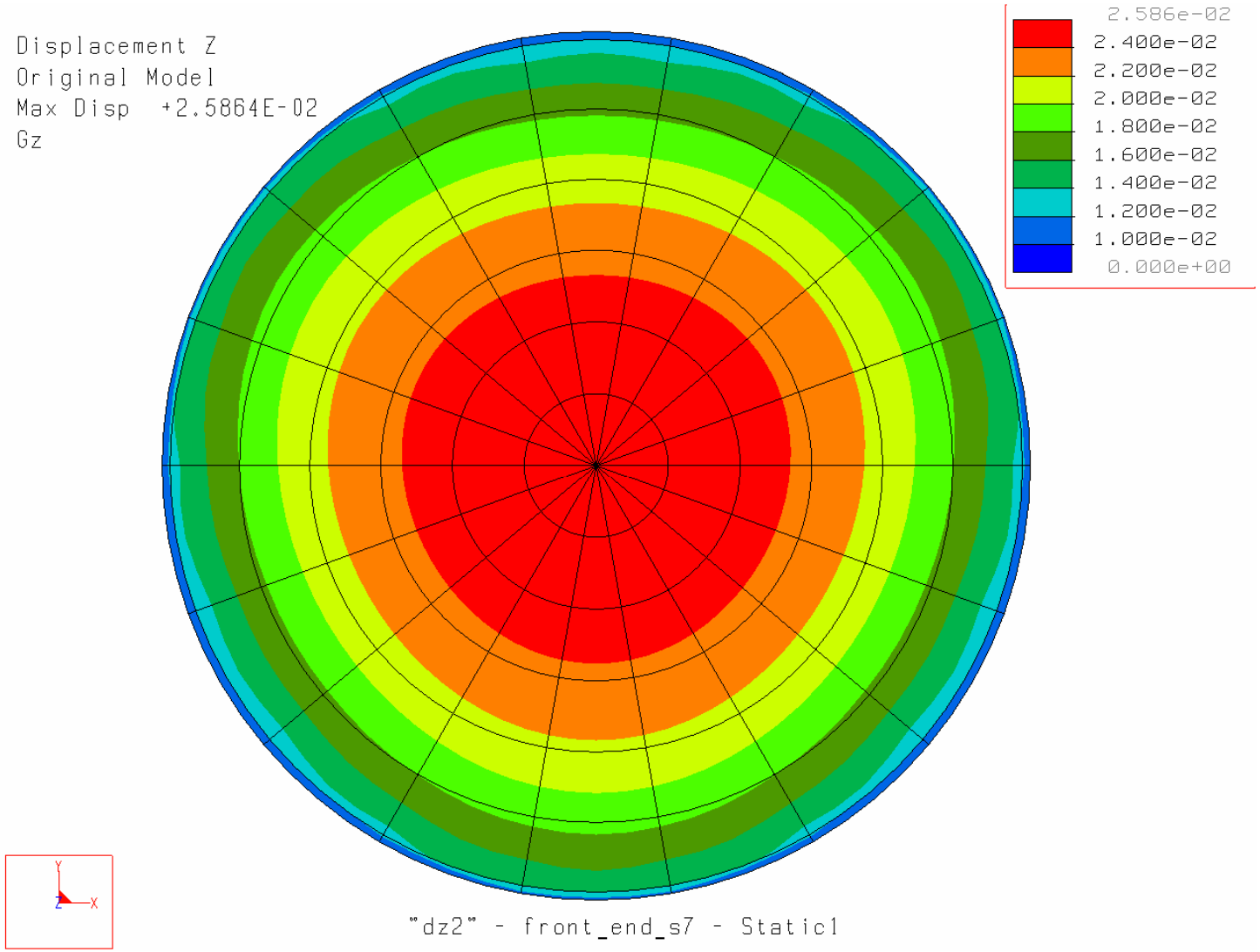

2 μm per fringe

Center-to-edge displacement is 13.3 μm. Three-fold edge displ. is 1.7 μm max, 18-fold edge displ. is 0.63 μm max.

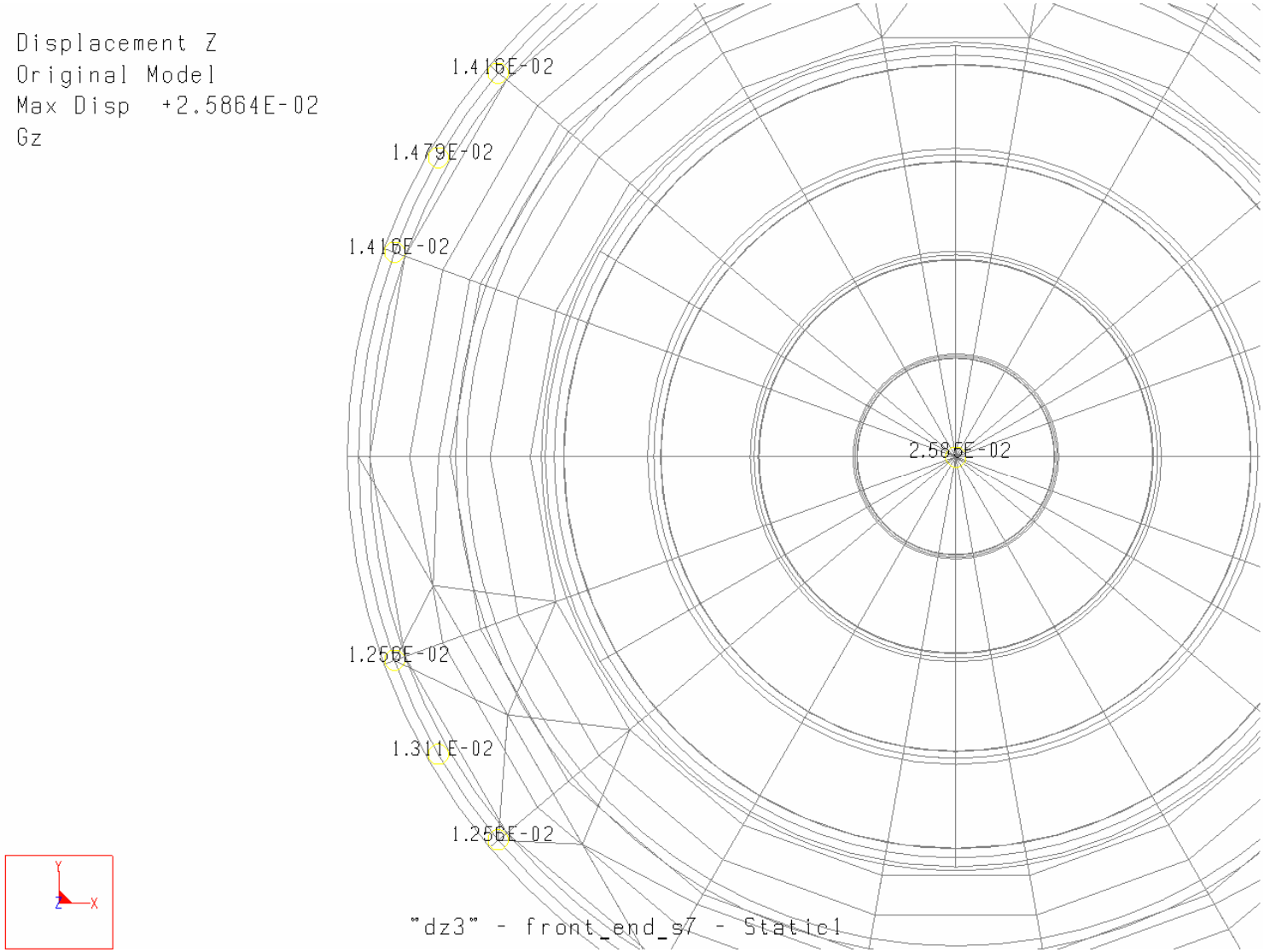

Contour plots showing Z displ. of L1 under 1g X & Y loads

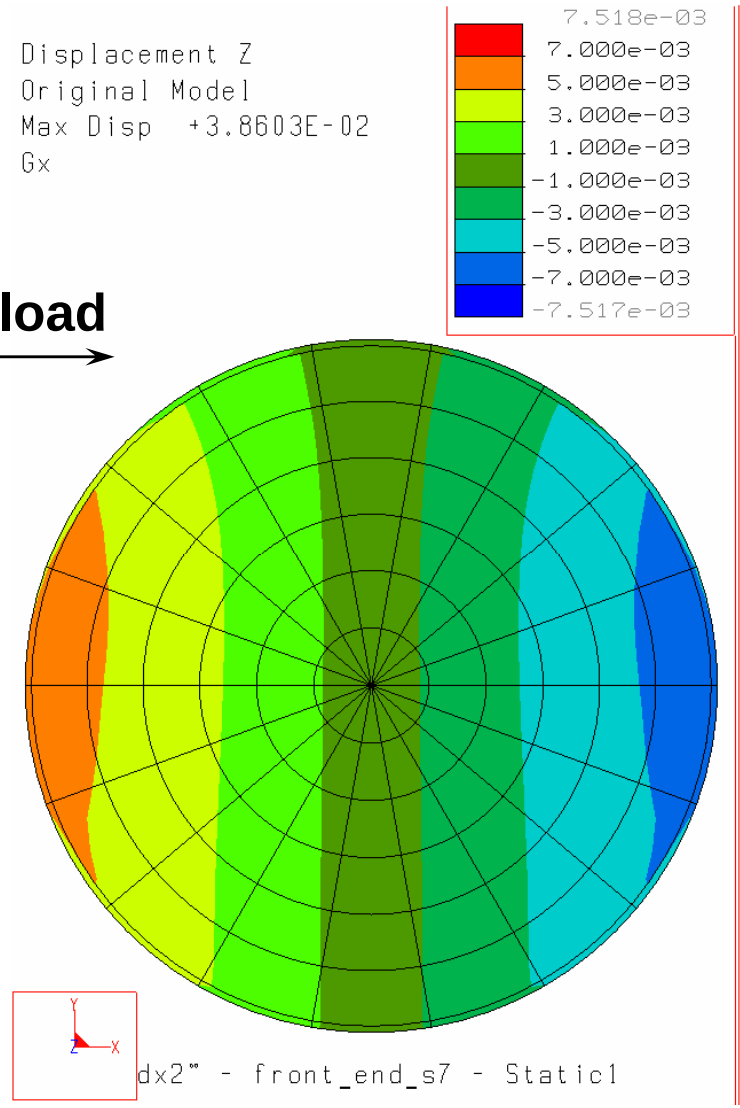

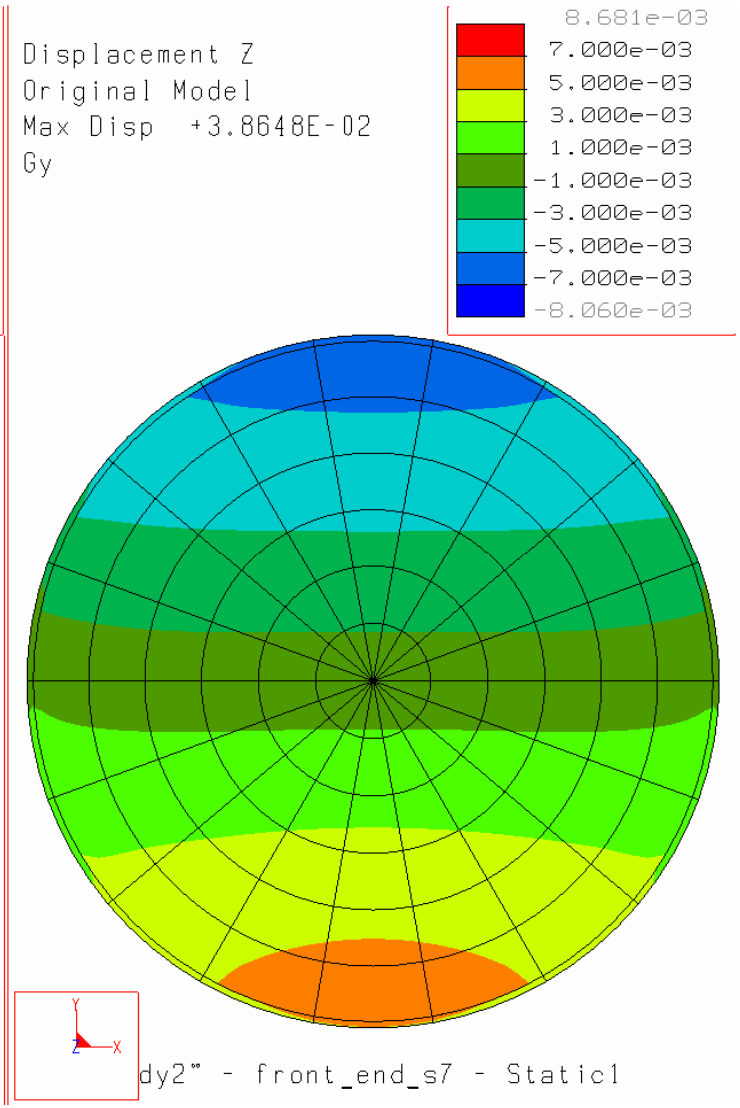

1 g load

2 μm per fringe

1 g load

Contour plot showing Z displacement of L2 under 1g Z load (values appear on next slide)

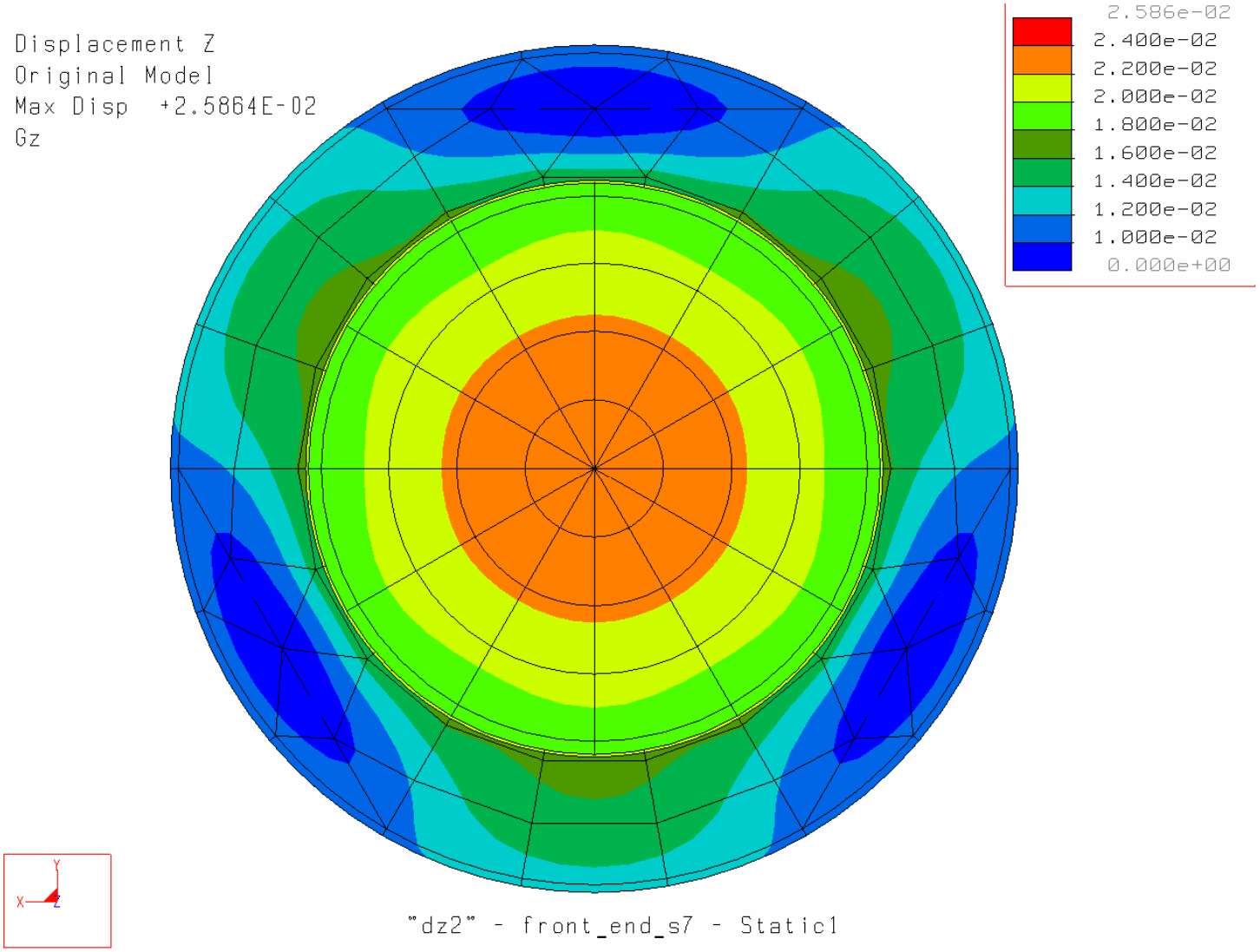

2 μm per fringe

Center-to-edge displacement is 5.4 μm. Six-fold edge displacement is 0.65 μm.

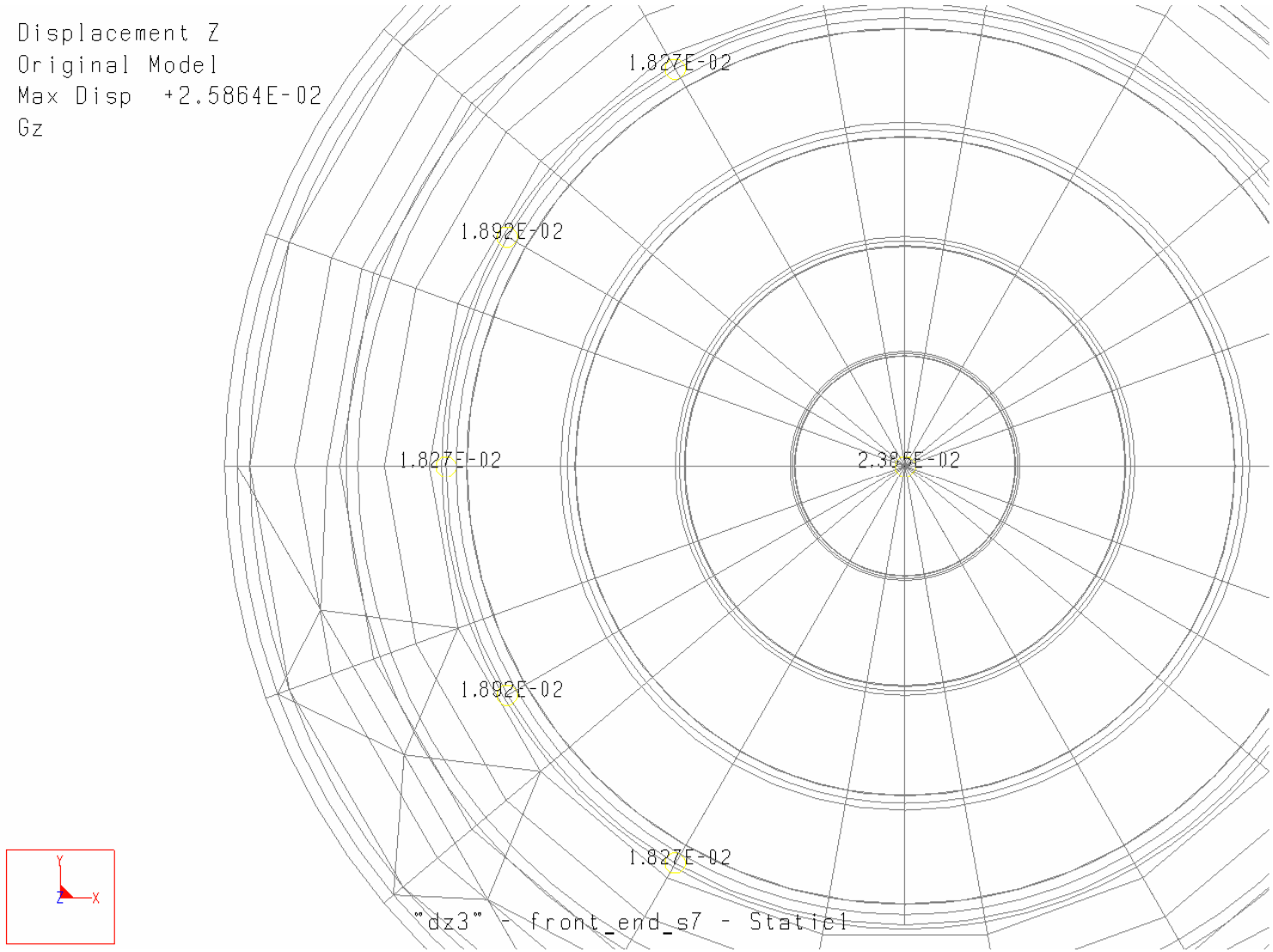

Contour plots showing Z displ. of L2 under 1g X & Y loads

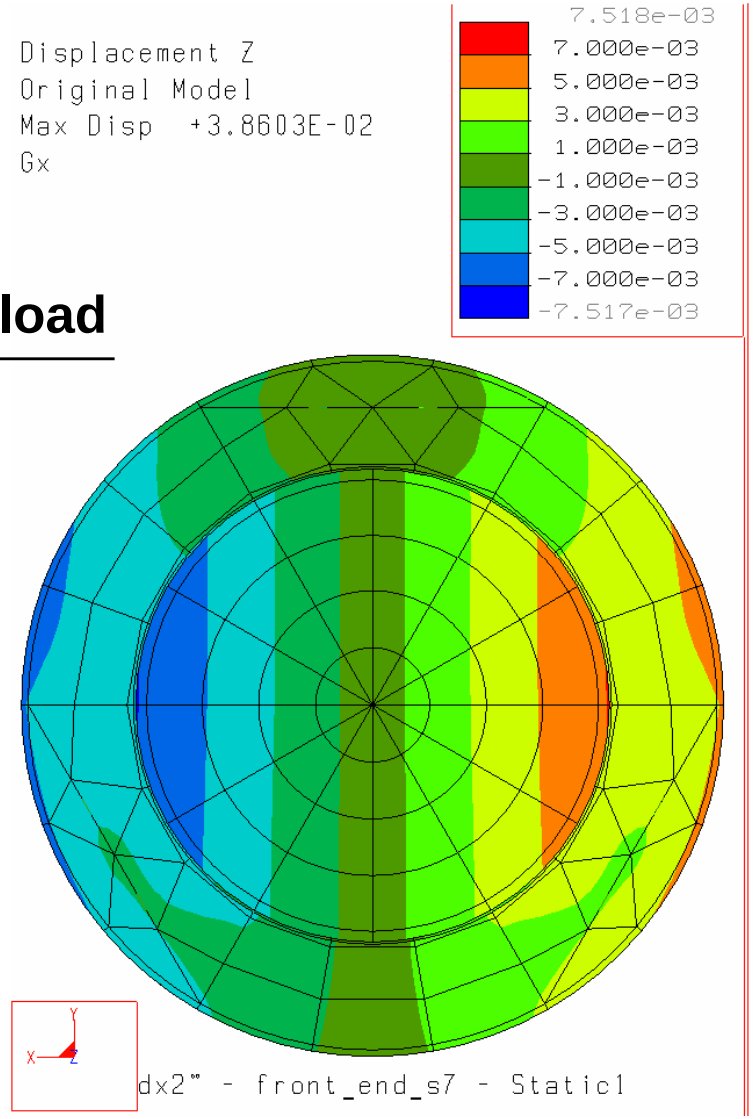

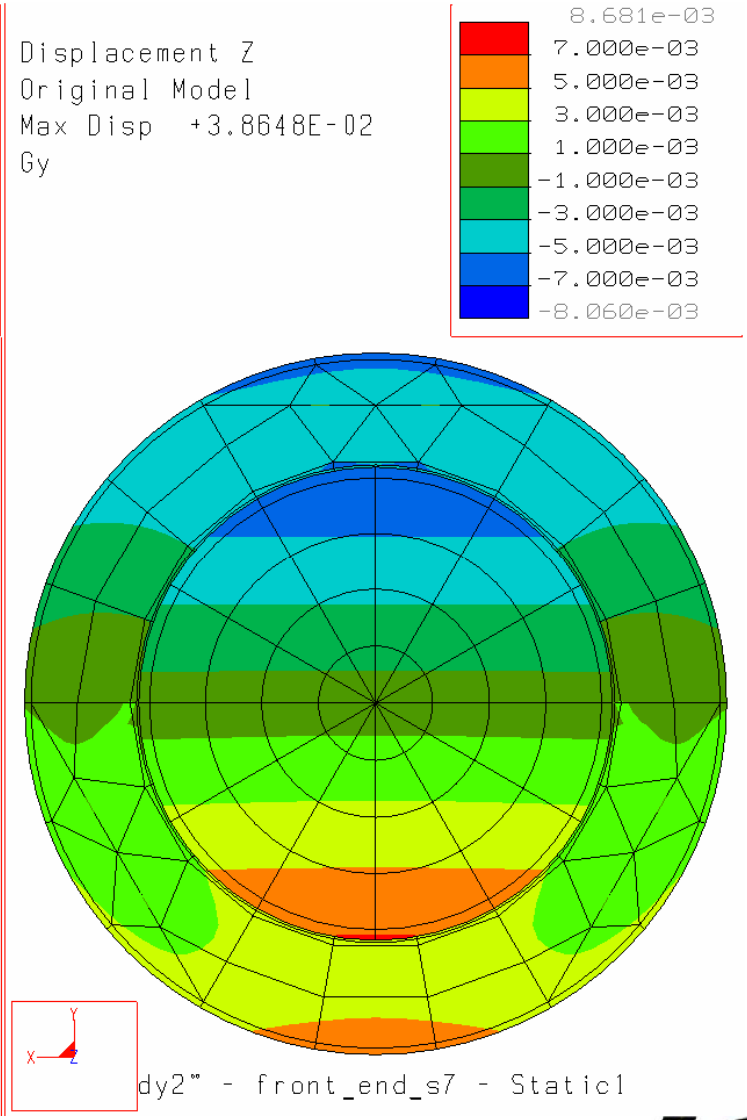

1 g load

2 μm per fringe

1 g load

A focal plane build/assembly strategy aimed toward minimizing the likelihood and effort of repair

- **Goal # 1: Replace the defective raft(s) without disturbing the others, especially their cables**
  - **This implies that everything related to a raft lies in the shadow of the raft, including electronics, cables, feedthrus**
  - **The only access to any raft is through its port in the rear bulkhead of the cryostat**
  - **A raft is handled from the rear even though L3 must be removed**
- **Goal # 2: All rafts are interchangeable, including spares, so they install without further adjustment**
  - **This may be accomplished with a repeatable mounting, e.g., a three-vee kinematic coupling with submicron repeatability**
  - **All rafts are set up and inspected in the same measuring machine relative to its kinematic coupling**
- **Goal # 3: The integrating structure is passive except for things accessible after removing L3**

All the precision is built into the integrating structure and rafts in advance to enable snap-together assembly

- **The integrating structure is measured cold and under load to determine how to correct its shape**
- **Verify with a master raft that every location on the integrating structure is correct within the necessary tolerance**
- **Make all rafts match the master raft within the necessary tolerance**
- **Assemble and test to verify the process**
- **Would likely test the whole array after replacing any raft**

Layout of rear bulkhead on cryostat

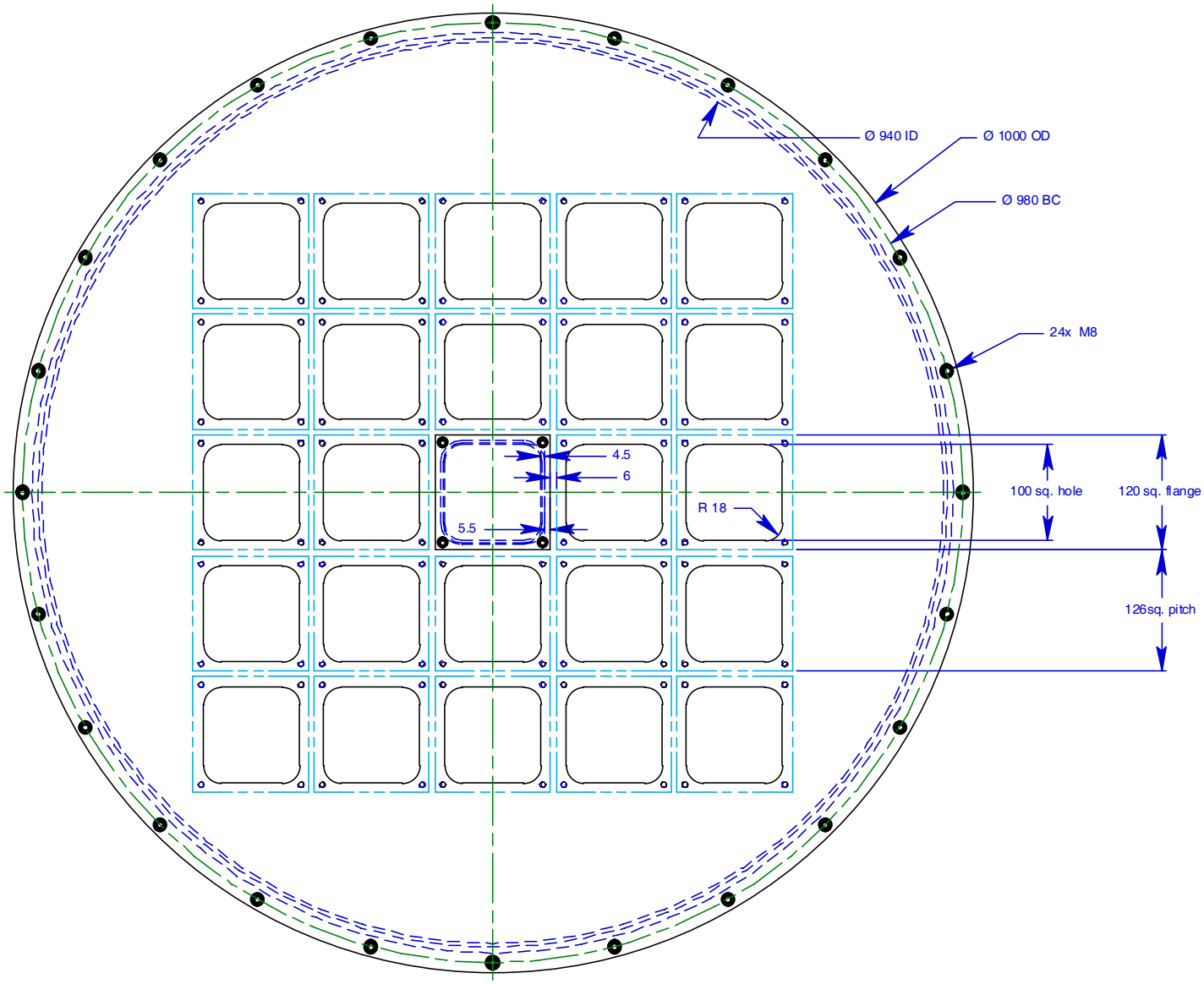

40 mm thickness gives reasonable results for vacuum load

Max. displ. = 0.86 mm (0.034”)

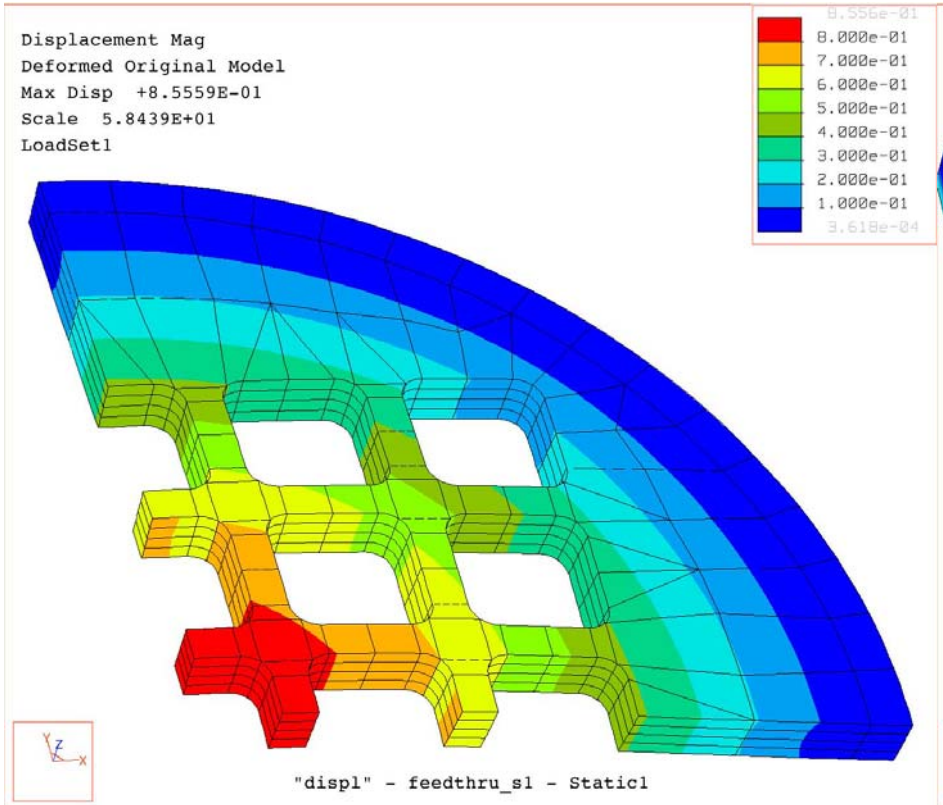

Max. stress = 61 MPa (8.8 ksi)

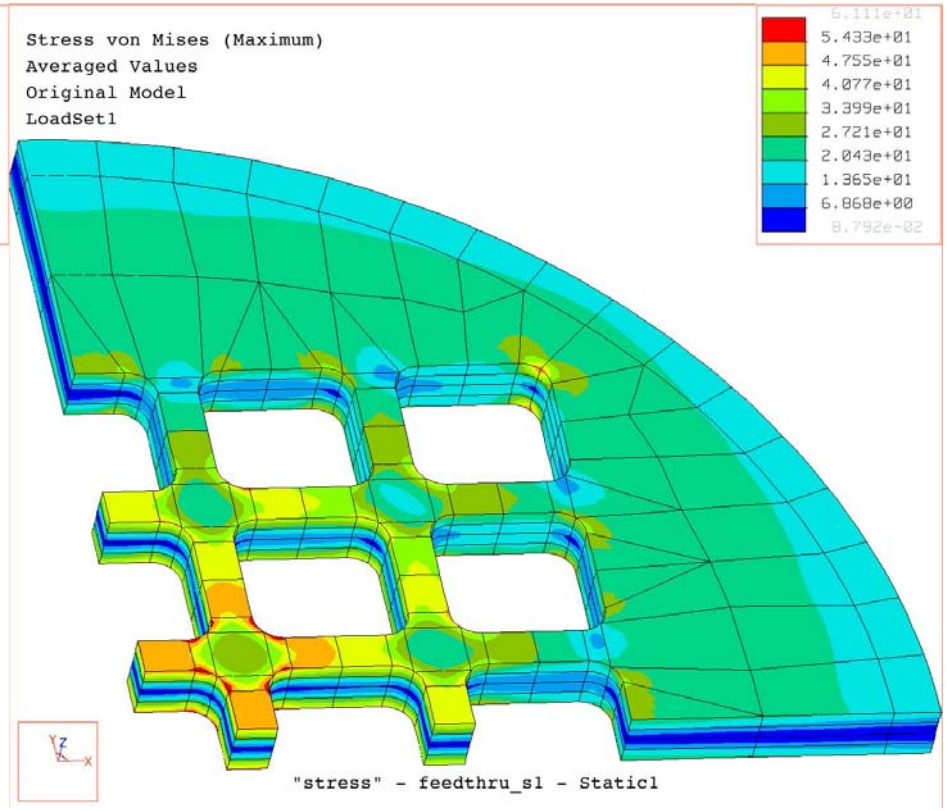

Priorities for FY06

- **Structural model of the camera body, rotator and hexapod**
  - **Will use to refine the mass estimate**
  - **Will enable a simplified model for the telescope team**
- **Focal plane assembly**
- **Support project activities e.g., WBS and proposal**