Development of Fast Timing Electronics for MRPC-TOF Detectors

Zhi Deng
Department of Engineering Physics,
Tsinghua University, Beijing, China

Seminar Talk @ BNL Instrumentation Division, 9 June, 2010

Contents

- Introduction of MRPC detectors
- Current mode front end
- FPGA based Time to Digital Converter

MRPC: Timing RPC

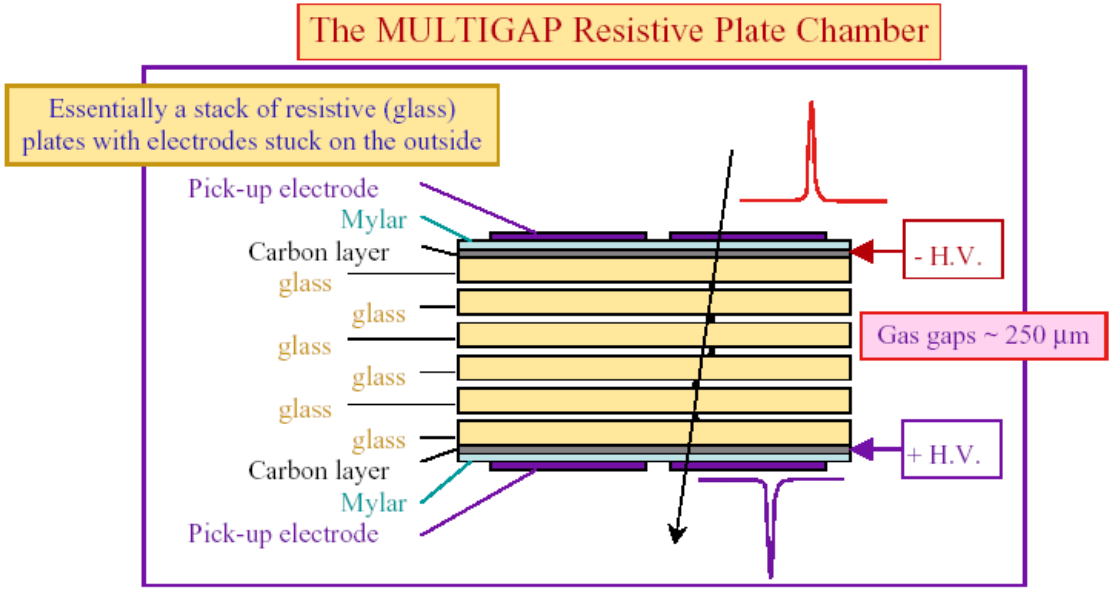

Note 1: internal glass plates electrically floating - take and keep correct voltage by electrostatics and flow of electrons and ions produced in gas avalanches

Note 2: resistive plates transparent to fast signals - induced signals on external electrodes is sum of signals from all gaps

Large area, high granularity
Good time resolution<100ps
High efficiency> 95%

ALICE, STAR, FOPI, HADES HARP and CBM all use MRPCs to construct TOF system

Different Prototypes

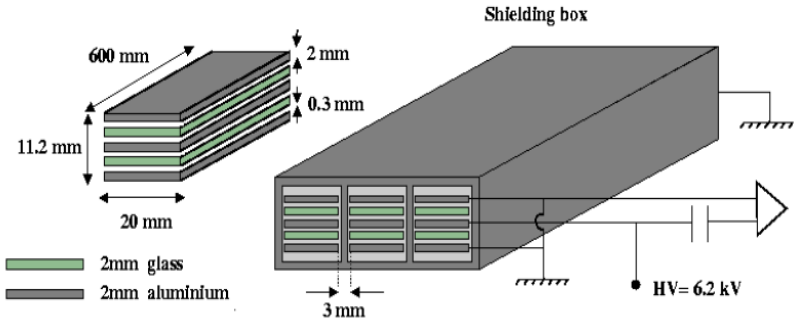

Used in HADEs

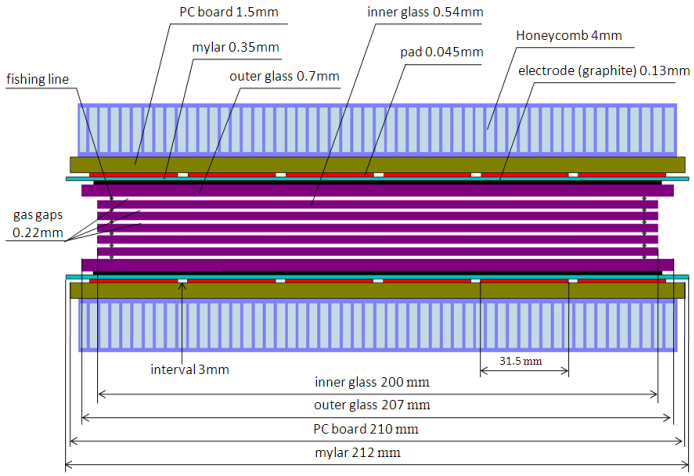

Used in STAR

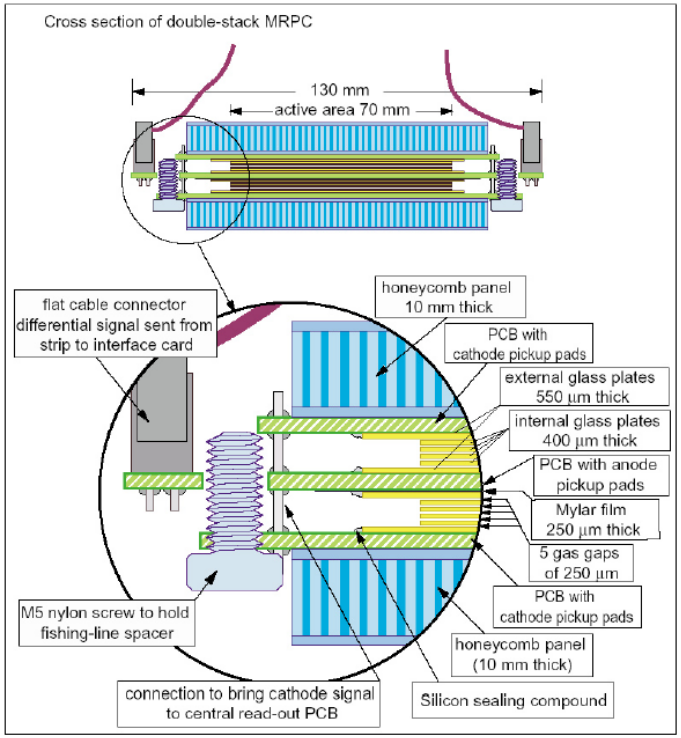

Used in ALICE

MRPCs Used in Hadron Experiments

Detector	HARP	ALICE	STAR	FOPI	HADES
N_{gaps}	4	10	6	6	4
gap size [mm]	0.3	0.25	0.22	0.3	0.3
gas[$C_2F_4H_2/SF_6/C_4H_{10}$]	90/5/5	90/5/5	95/0/5	85/10/5	98.5/1/0.5
electric configuration	cat-an-cat	cat-an-cat	an-cat	cat-an-cat	cat-an-cat
cell size [cm×cm]	22×10.6	2.5× 3.7	6.3× 3.1	90×0.34	60×2
detector size	10 m^2	150 m^2	60 m^2	5 m^2	8 m^2
$N_{channels}$	368	160000	$\simeq$ 30000	5000	$\simeq$ 2100
HV/gap	3.0 kV	2.4 kV	2.35 kV	3.3 kV	3.2 kV
ε	99%	99.9%	95-97%	97 $\pm$ 3%	>95%
plateau length	300 V	2000 V	500 V	600 V	$\gtrsim$ 200 V
σ_T	-	90 ps	120 ps	-	100 ps
σ_T (after slewing corr.)	150 ps	40 ps	60 ps	73 $\pm$ 5 ps	70 ps
cross-talk/neighbor	$<$ 10%	-	-	-	$<$ 0.5%
3-σ tails	-	-	-	$<$ 2%	6%
space resolution [cm^2]	-	-	-	-	0.6×0.6
experiment rates	1 Hz/cm^2	50 Hz/cm^2	10 Hz/cm^2	50 Hz/cm^2	700 Hz/cm^2
dark rate [Hz/cm^2]	$<$ 0.1	-	$<$ 0.3	$<$ 1	2−3
rate capability [Hz/cm^2]	$\leq$ 2000	$\leq$1000	-	-	350
$\rho\ d$ [$10^{12}\ \Omega \times cm^2$]	10 × 0.105	- × 0.04	5 × 0.055	- × 0.15	5 × 0.1
$\bar{q}$	-	2 pC	-	-	-
$\bar{q}_{prompt}$	-	-	-	-	0.7 pC
material budget (x/X_o)	-	-	-	-	12-24%
resistive material	float glass	float glass	float glass	float glass	float glass

PID with TOF @ STAR

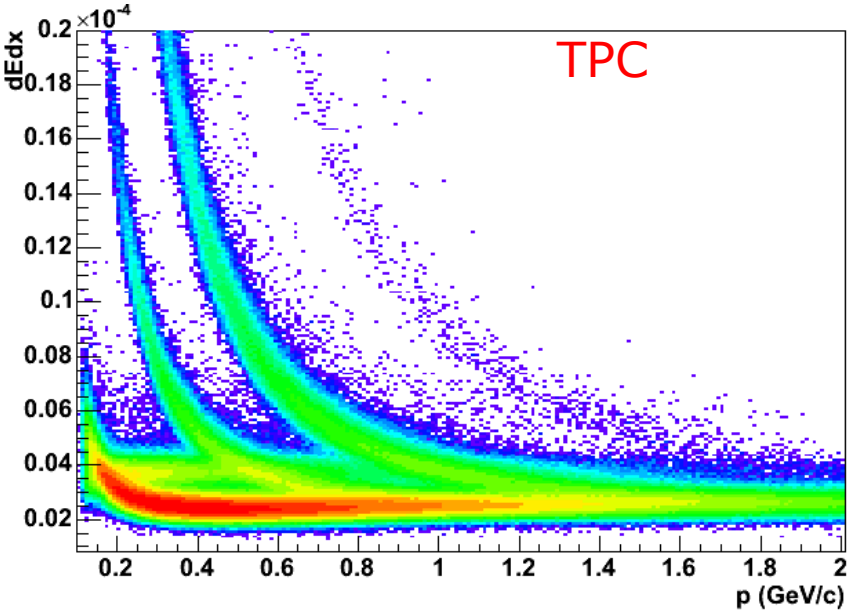

Only TPC:

π/k ~0.7 GeV/c,

(π,k)/p ~1.1 GeV/c

Only TOF:

π /k ~1.6 GeV/c,

(π,k)/p ~ 3.0 GeV/c

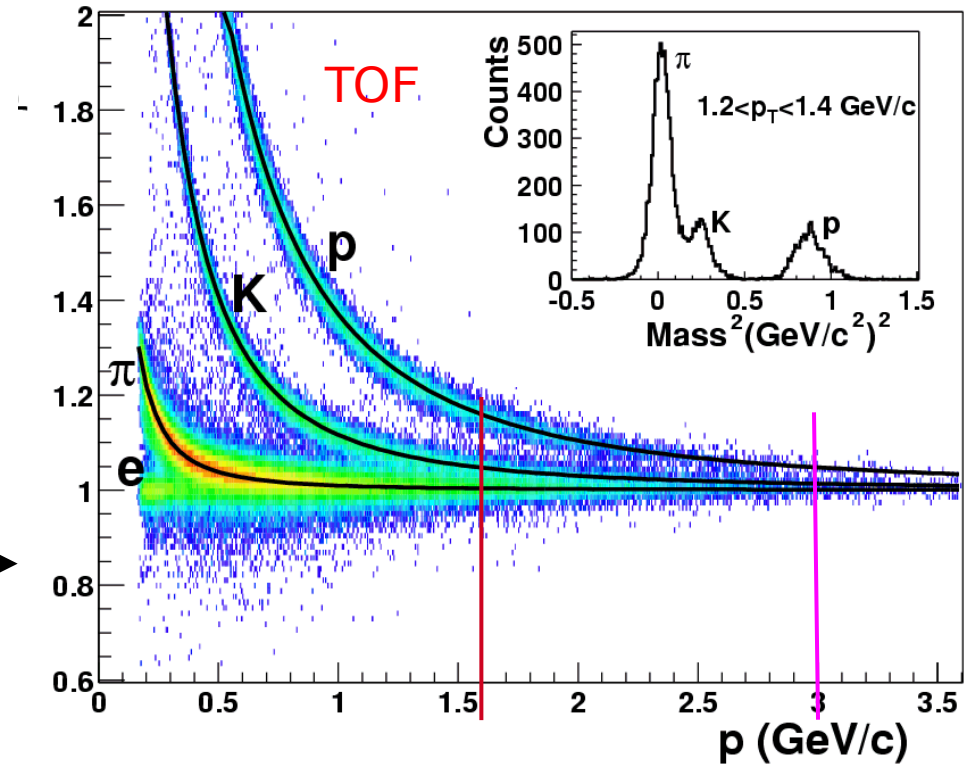

FAIR-CBM TOF

Heavy ion collision from 2-35Gev

⟶ phase structure of strongly interacting baryon rich matter.

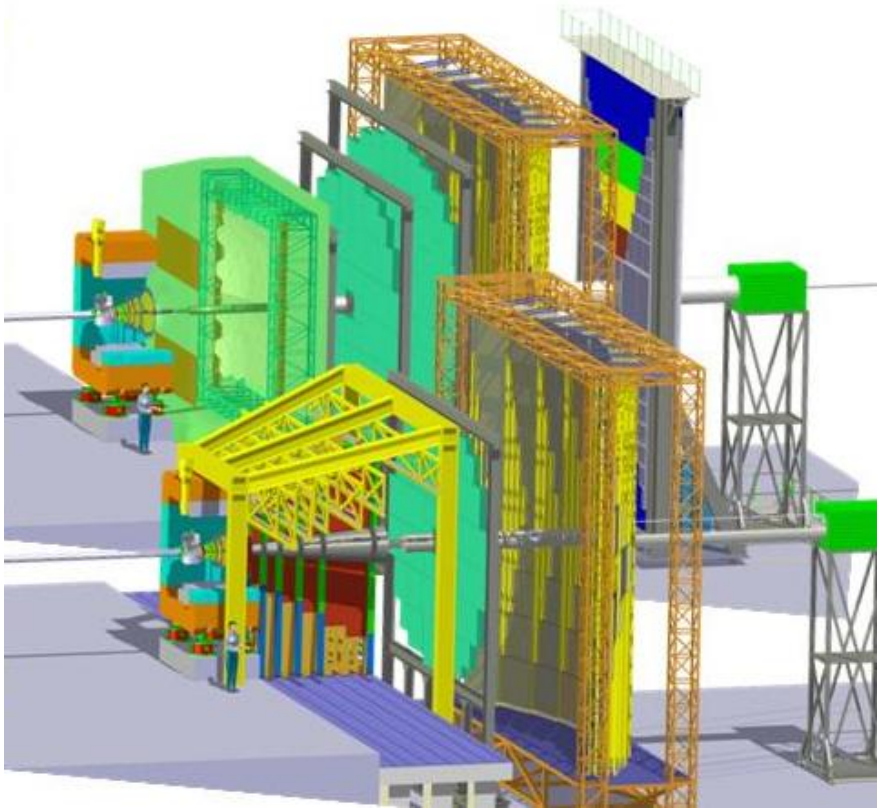

- Challenges:
  - high rate ≈ 20 kHz/cm^2
  - good time resolution < 100 ps
  - large area and economic (price!)
- Solution:
  - low resistivity glass ~10^{10} Ωcm
  - high rate MRPC (pad-readout and strip-readout)

High Rate MRPC

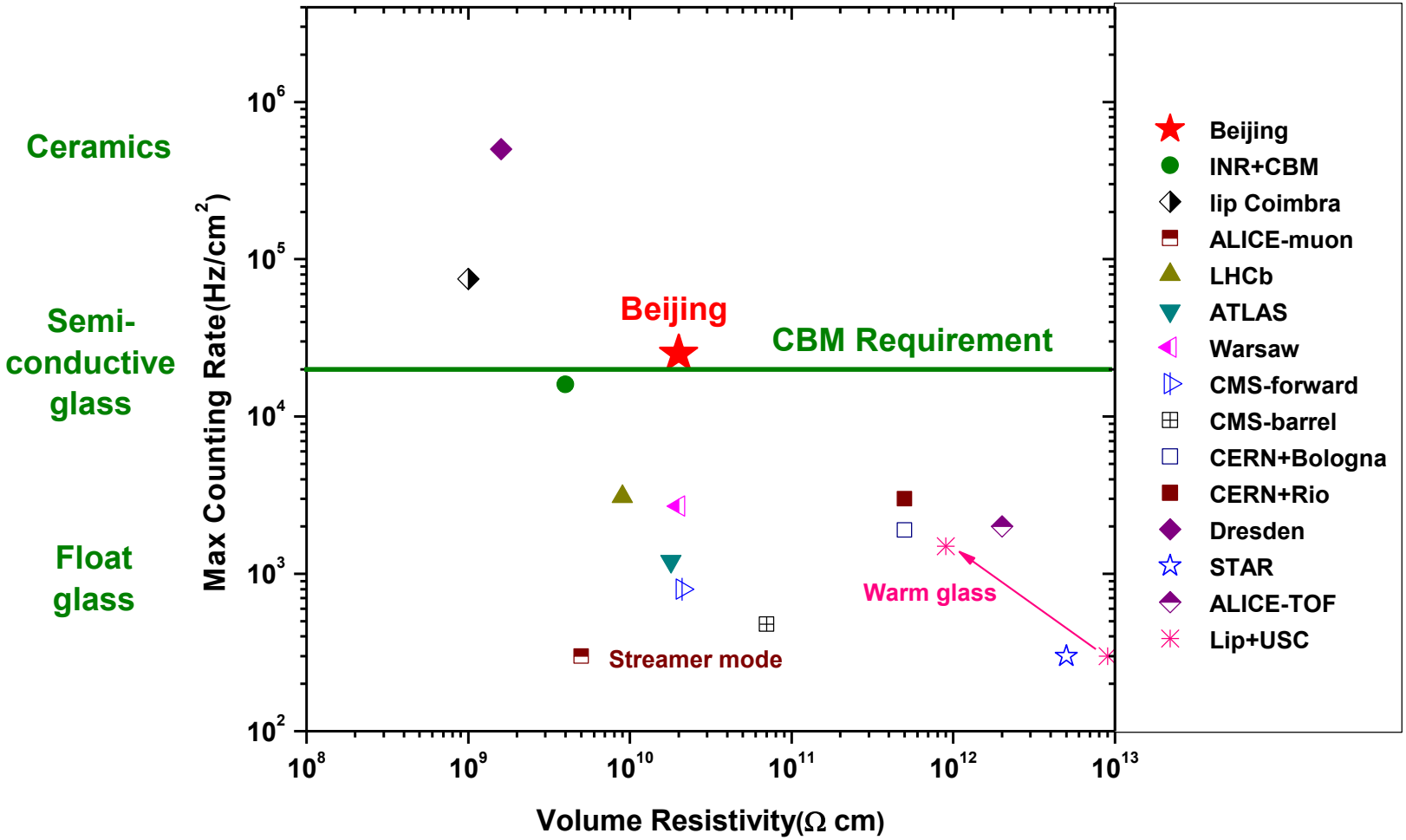

Performance of High Rate MRPC

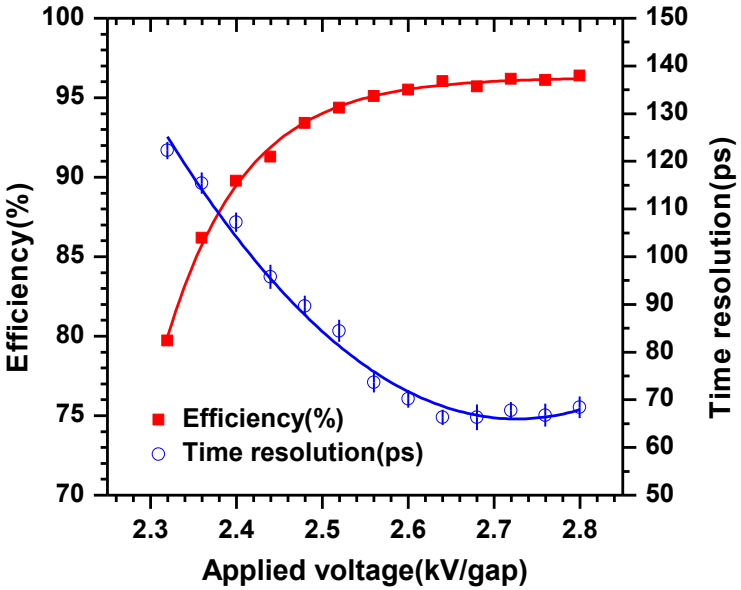

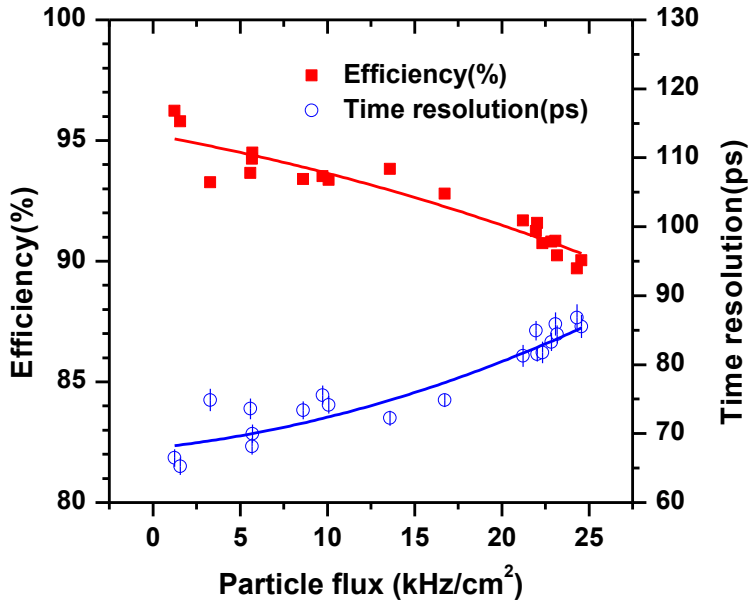

Efficiency and time resolution as a function of high voltage at a rate of about 800Hz/cm^2

When the particle flux increases every 5 kHz/cm^2, the efficiency decreases by 1% and the time resolution deteriorates by 4 ps.

Requirements for Fast Electronics

- High bandwidth: multi-GHz, ~10ps time jitter
- Low power consumption: ~10mW/ch
- High rate: 20kHz/cm^2

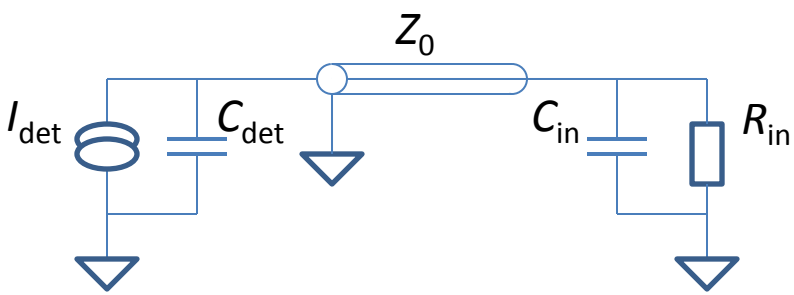

Multi-GHz bandwidth is needed for fully exploit the power of the detector.

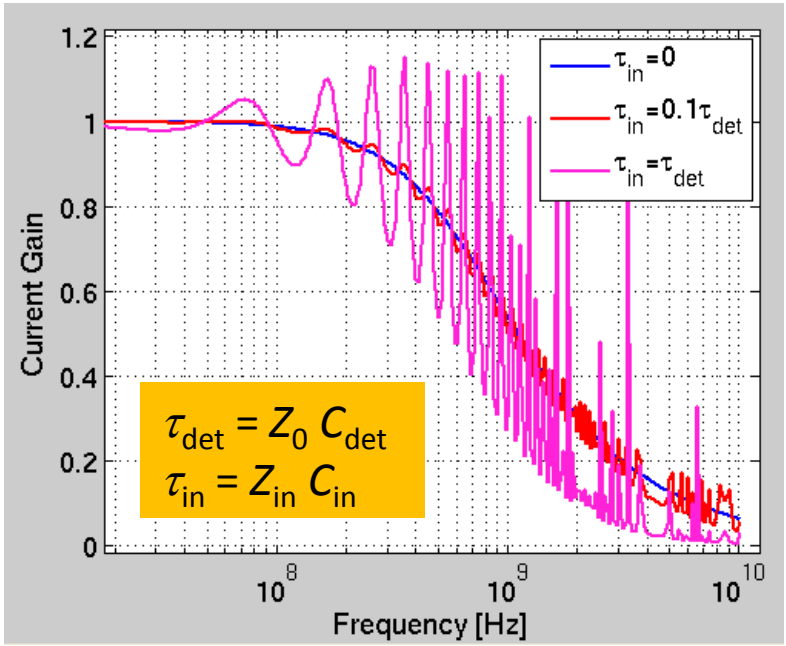

Why Current Mode

- Information is represented by the branch currents rather than the nodal voltages
- Wide bandwidth, low input impedance
- Reduced dynamic power consumption
- Less sensitive to switching noise
- Better ESD immunity
- Lower supply voltage

Start from the discriminator

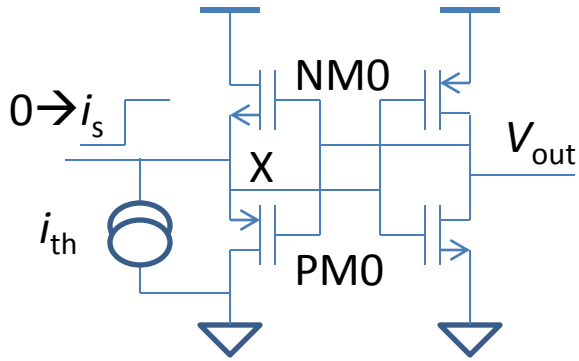

For a step input current

$$Q_x = C_x \Delta V_x = i_s t + \int_t (i_{NM0} - i_{PM0}) dt$$

If i_{NM0} and i_{PM0} can be ignored During t,

$$t \approx \frac{Q_x}{i_s}$$

$$\sigma_t = \frac{\sigma_{Q_x}}{i_s} = \frac{\sqrt{\bar{n} e^2 t}}{i_s} = \frac{\sqrt{2 i_n^2 t}}{i_s}, i_n^2 = \sum 4\gamma k T g_{m_i}$$

$$\sigma_t^2 = \frac{2 i_n^2 Q_x}{i_s^3}$$

Minimum sized transistors are used for NM0 and PM0 and they are biased at very small current, so:

Σg_m~1-100μS, C_x~100fF, ΔV_x~0.1V, Q_x~10fC

σ_t~0.5-4.7ps for i_s=10μA

Unfortunately

- Long connections between detectors and electronics
  - → Parasitic capacitance at node X
- Also for fast signals, connections should be modeled as transmission line.
  - → Need impedance matching: ~50 Ohm

    Σg_m~20mS, Q_x~10fC

    σ_t~66ps for i_s=10μA
  - → Limited bandwidth, i.e., increase of t

    Σg_m~20mS, Q_x~10fC

    $d\sigma_t/dt$~33ps/ns for i_s=10μA

A Simple Current Mirror

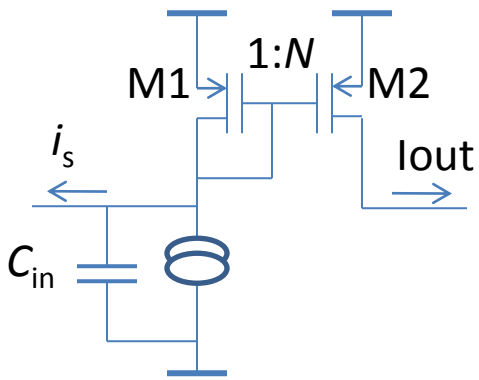

$$R_{in} = \frac{1}{g_{m1}} = \frac{1}{\sqrt{2\mu C_{ox}\frac{W}{L}I_D}}$$

$$i_{out} = N \cdot i_s$$

$$\tau_b = \frac{(C_{gs1} + C_{gs2} + C_{in})}{g_{m1}}$$

$$i_{n,out}^2 = 4\gamma kT(N + N^2)g_{m1}$$

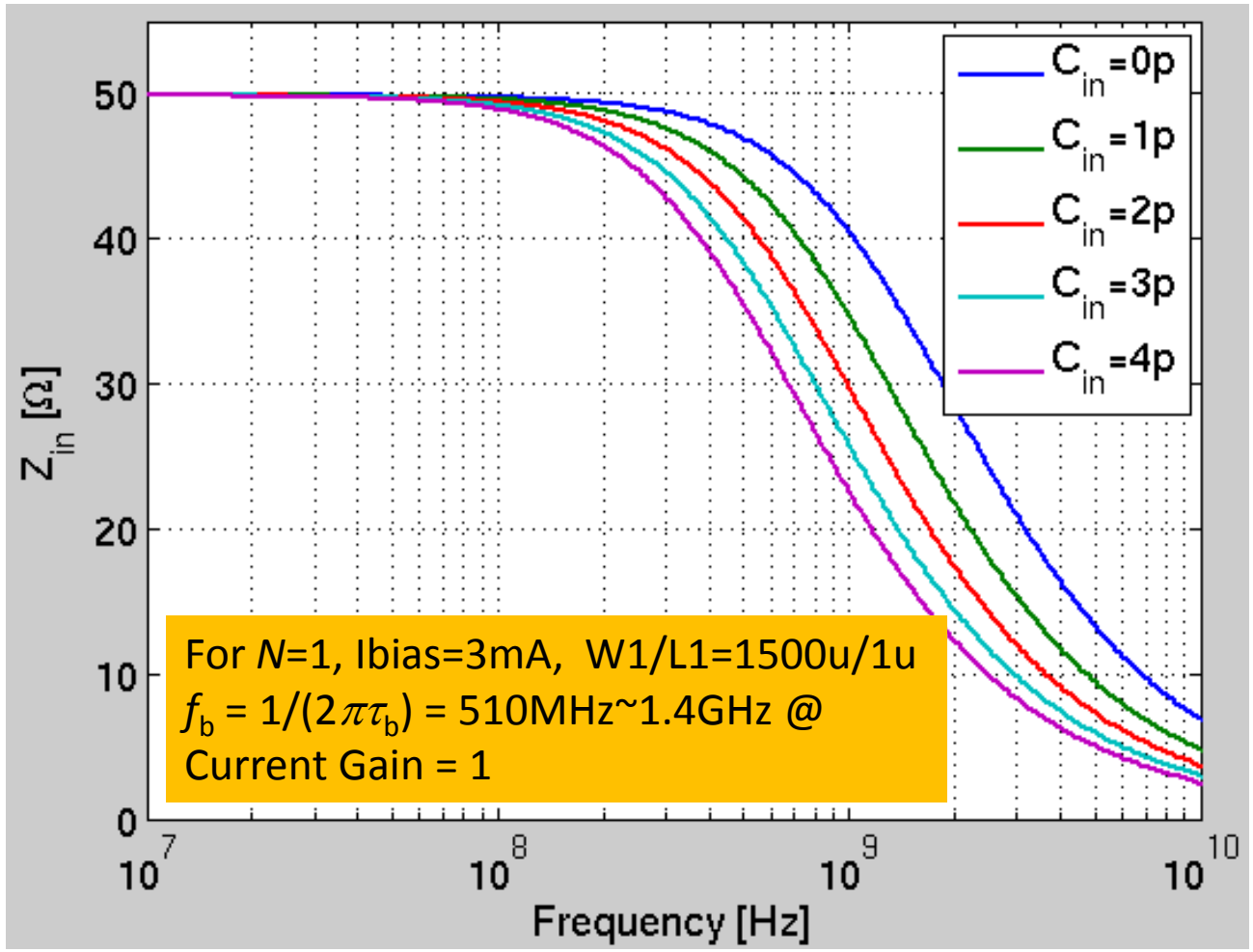

Time Jitter

$$Q_x = \int_t i_s(1-e^{-t/\tau_b})dt = i_s t - i_s\tau_b(1-e^{-t/\tau_b})$$

$$\text{for } t >> \tau_b, Q_x \approx i_s t, \sigma_t^2 = \frac{2i_n^2 Q_x}{i_s^3};$$

$$\text{for } t << \tau_b, Q_x \approx \frac{i_s}{2}\frac{t^2}{\tau_b}, \sigma_t^2 = \frac{\sqrt{2}i_n^2}{\sqrt{Q_x}}(\frac{\tau_b}{i_s})^{\frac{3}{2}}$$

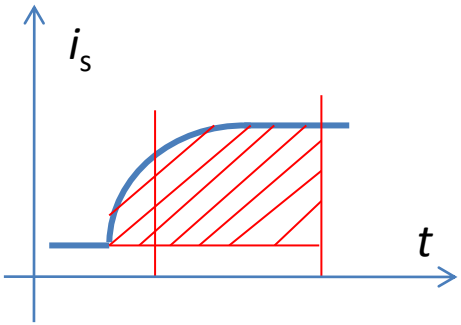

$$\sigma_t^2 = \frac{2\cdot 4\gamma kT(N+N^2)Q_x}{R_{in}(Ni_s)^3} \approx \frac{8\gamma kTQ_x}{R_{in}Ni_s^3}$$

or

$$\sigma_t^2 = \frac{\sqrt{2}\cdot 4\gamma kT(N+N^2)}{\sqrt{Q_x}}(\frac{\tau_b}{Ni_s})^{\frac{3}{2}} \approx \frac{4\sqrt{2}\gamma kT(\frac{1}{\sqrt{N}}+\sqrt{N})}{\sqrt{Q_x}}(\frac{\tau_b}{i_s})^{\frac{3}{2}}$$

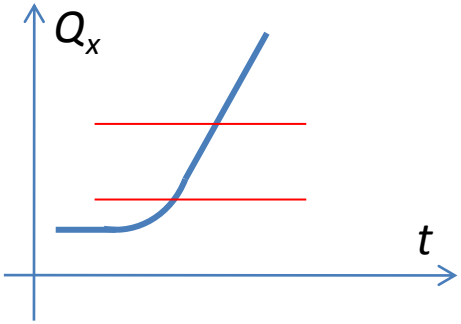

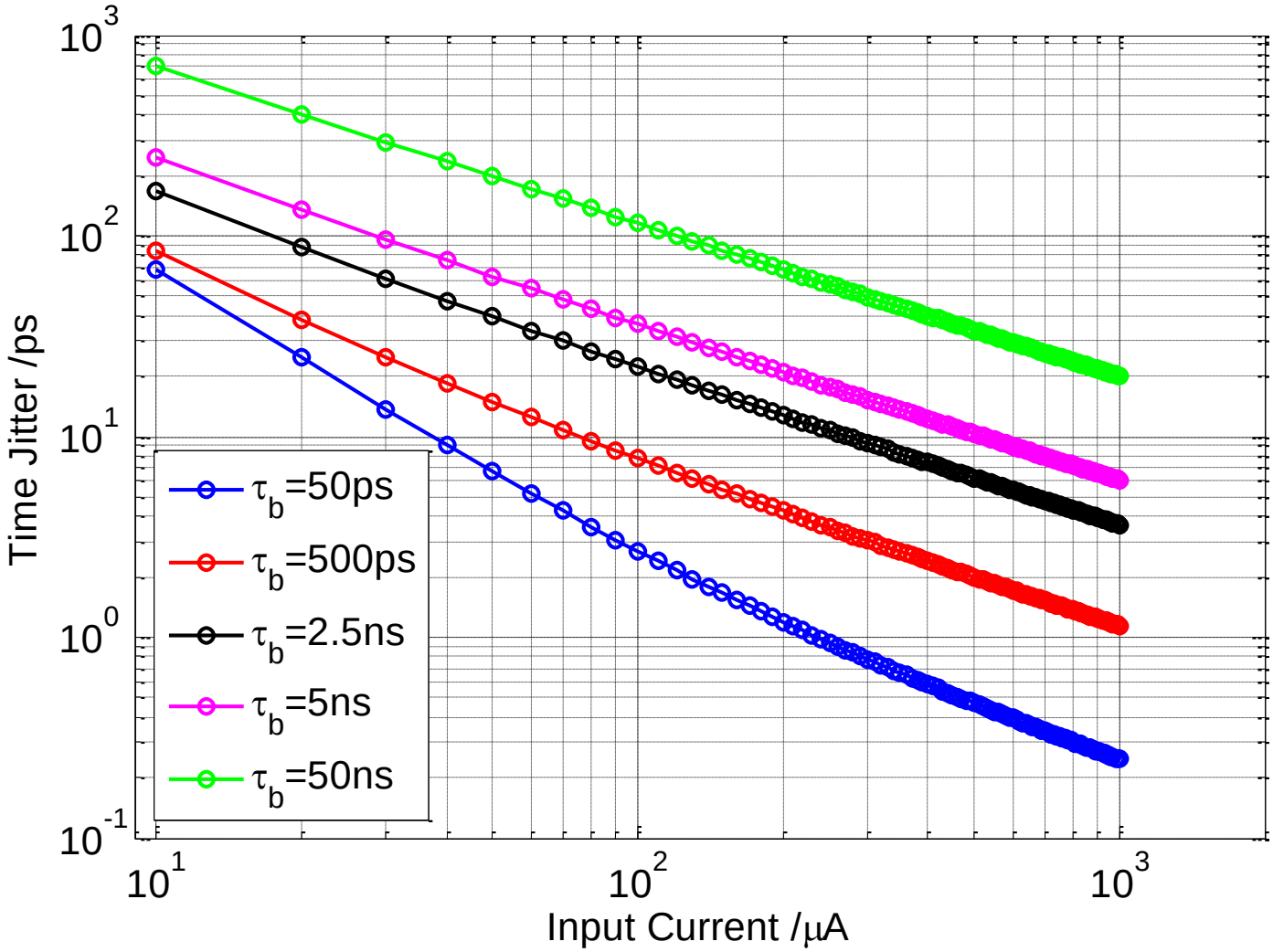
Time Jitter /ps
Input Current /μA
10^{3}
10^{2}
10^{1}
10^{0}
10^{-1}
10^{1}
10^{2}
10^{3}
τ_b=50ps
τ_b=500ps
τ_b=2.5ns
τ_b=5ns
τ_b=50ns

Compared to voltage mode

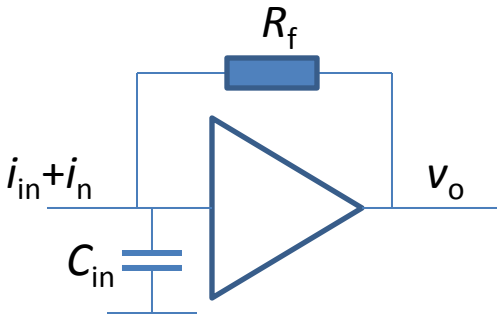

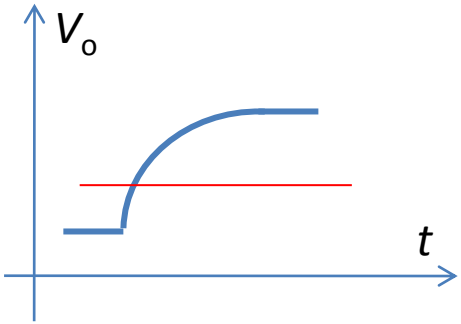

$$\frac{v_o}{i_s} = -\frac{A}{1+A}\frac{R_f}{1+sC_{in}(\frac{R_f}{1+A})}$$

$$\text{Gain} = R_f$$

$$\tau_b = \frac{R_f C_{in}}{1+A}$$

$$i_n^2 = \frac{(2\pi)^2 C_{in}^2 v_n^2 B_{eq}^3}{3} + (\frac{v_n^2}{R_f^2} + \frac{4kT}{R_f})B_{eq}, v_n^2 = \frac{4\gamma kT}{g_{m,in}}$$

$$\sigma_t^2 = \frac{v_{on}^2}{k^2} = \frac{i_n^2 \cdot R_f^2}{(\frac{i_s \cdot R_f}{\tau_b} e^{-t_0/\tau_b})^2} = \frac{i_n^2 \tau_b^2}{i_s^2 e^{-2t_0/\tau_b}}$$

A Short Summary

- Using current mode, one can achieve:
  - ~10ps time jitter can be achieved for ~10μA input current
  - Current gain can help with time jitter performance if it is fast enough
  - Time jitter is not so sensitive to the input capacitance than voltage mode

Cascoding

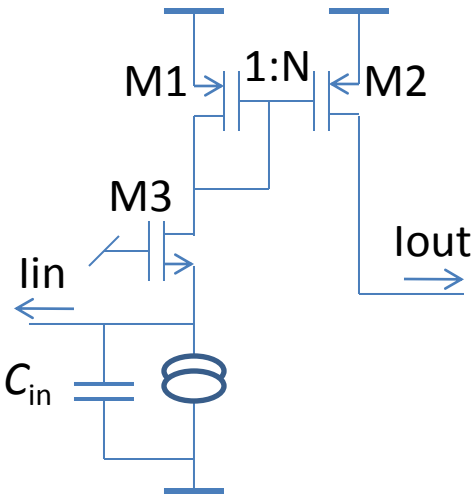

$$R_{in} = \frac{1}{g_{m3}}$$

$$i_{out} = N \cdot i_{in}$$

$$\tau_{b1} = \frac{(C_{gs3} + C_{in})}{g_{m3}}, \tau_{b2} = \frac{(C_{gs1} + C_{gs2} + C_{gd3})}{g_{m1}}$$

$$i_{n,out}^2 = 4\gamma kT[N^2 g_{m3} + (N + N^2) g_{m1})$$

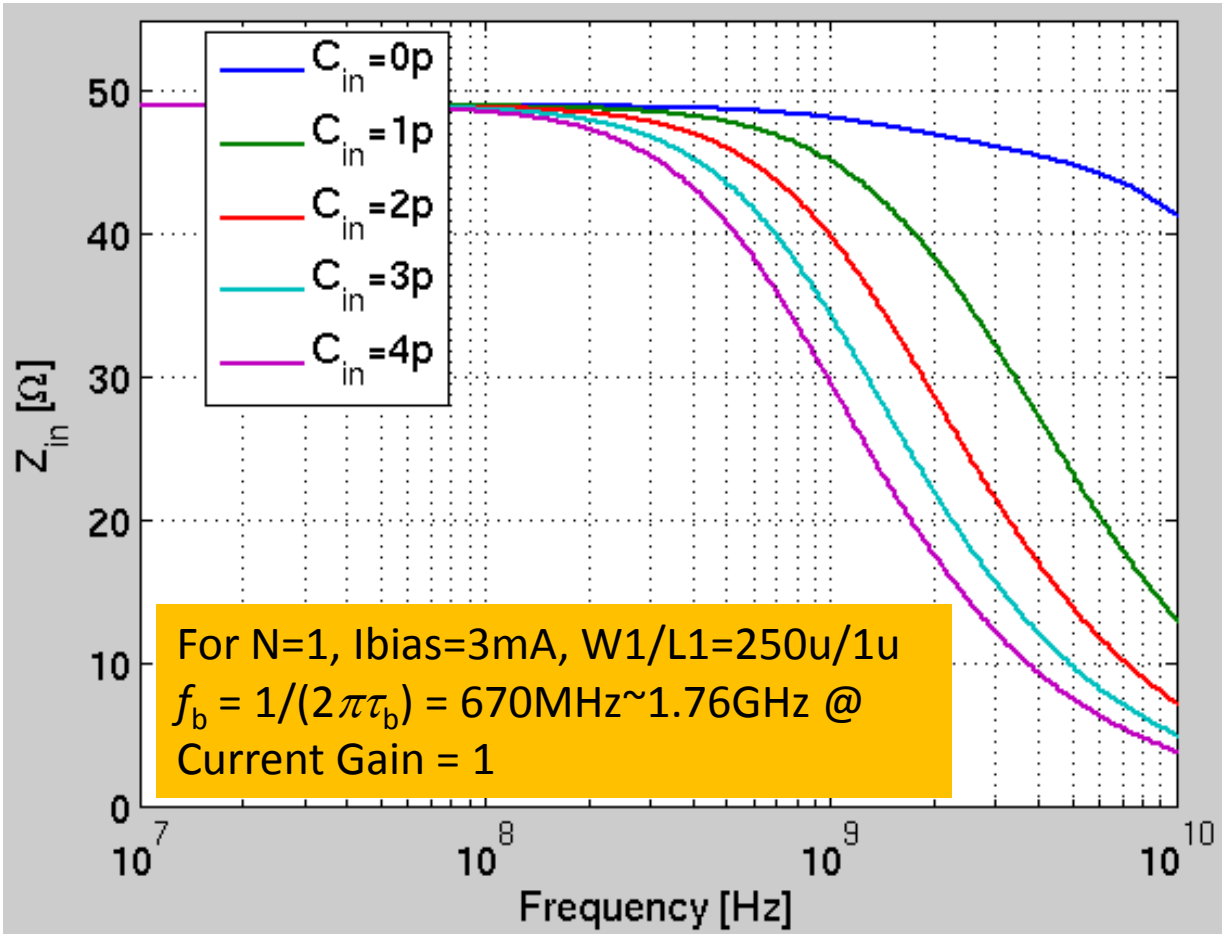

Cascoding with Current Feedback

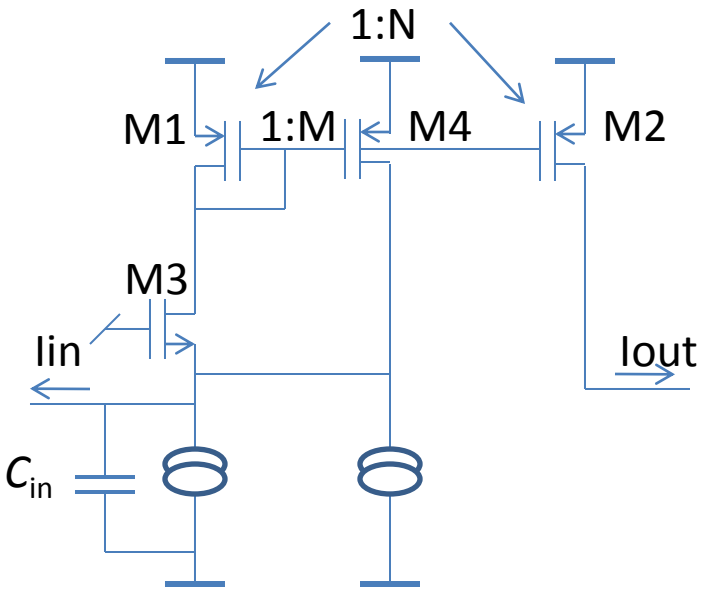

$$R_{in} = \frac{1}{(1+M)g_{m3}}$$

$$i_{out} = \frac{N}{(1+M)} \cdot i_{in}$$

$$\tau_{b1} = \frac{(C_{gs3}+C_{in})}{(1+M)g_{m3}}, \tau_{b2} = \frac{(C_{gs1}+C_{gs2}+C_{gs4})}{g_{m1}}$$

$$i_{n,out}^2 = 4\gamma kT[N^2 g_{m3} + (N + N^2 + \frac{N^2}{M})g_{m1}]$$

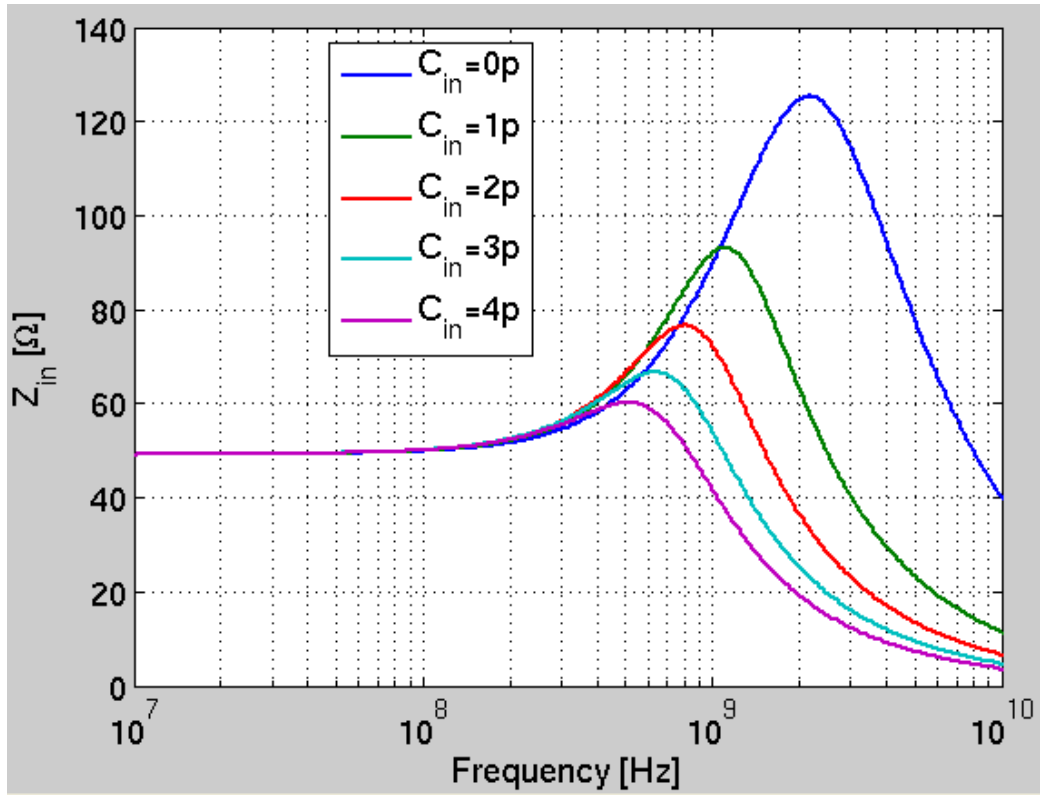

For M=2, N=3, Ibias=1mA, W1/L1=250u/1u
$f_b = 1/(2\pi\tau_b)$ = 740MHz~2.2GHz @ Current Gain = 1

Chip Design

- Two different structures: cascoding and cascoding with current feedback
- 1-3mA static current per channel, f_{-3dB} =150-900MHz @ Cin=1pF
- Very compact layout

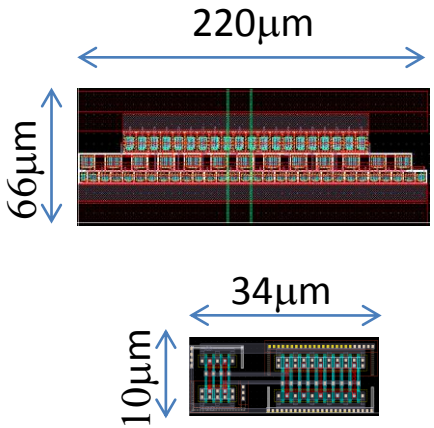

Cascoding

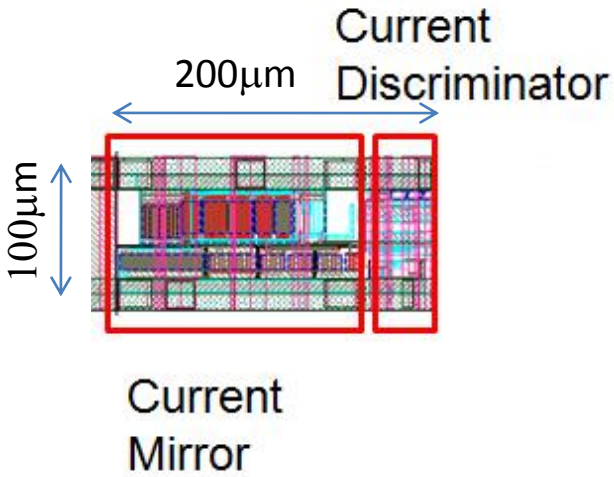

Cascoding with Current Feedback

Preliminary Test Results

- Static power consumption

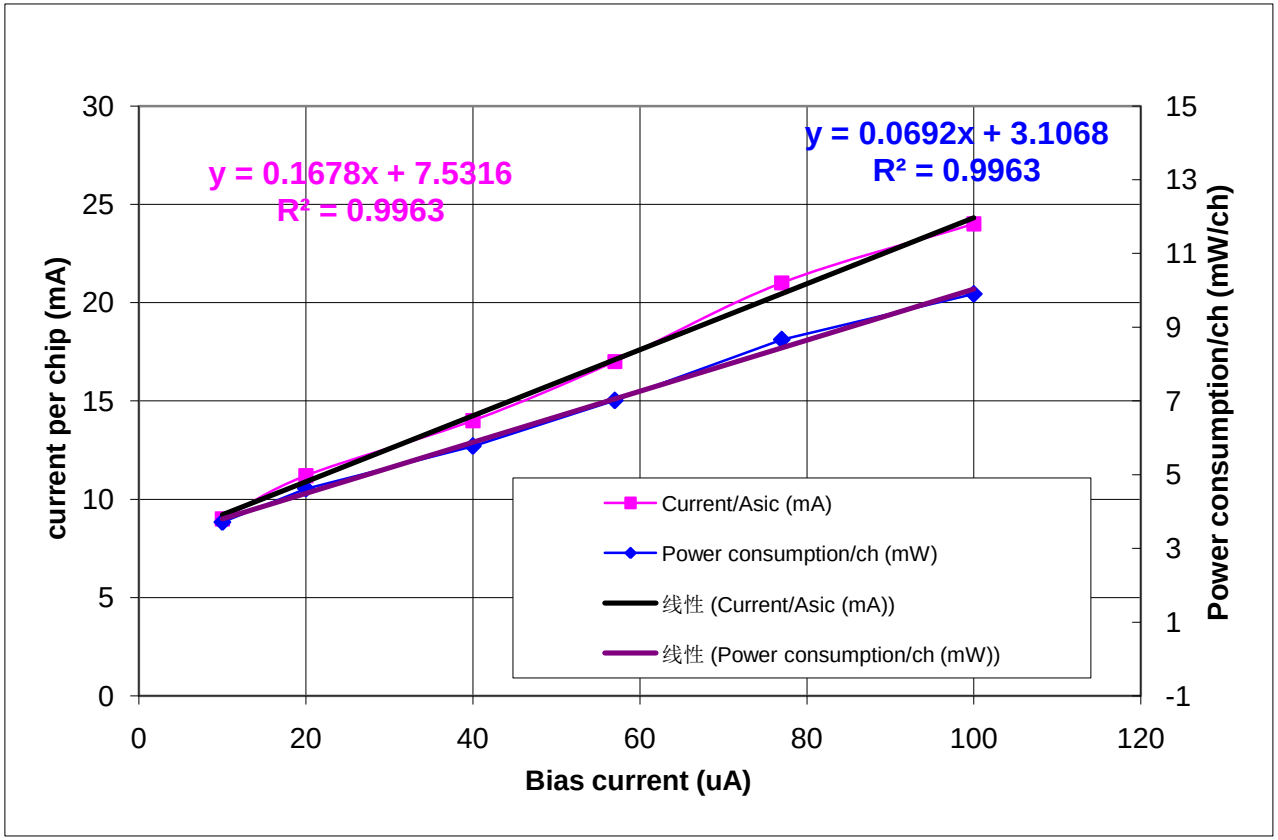

Input Impedance - Static

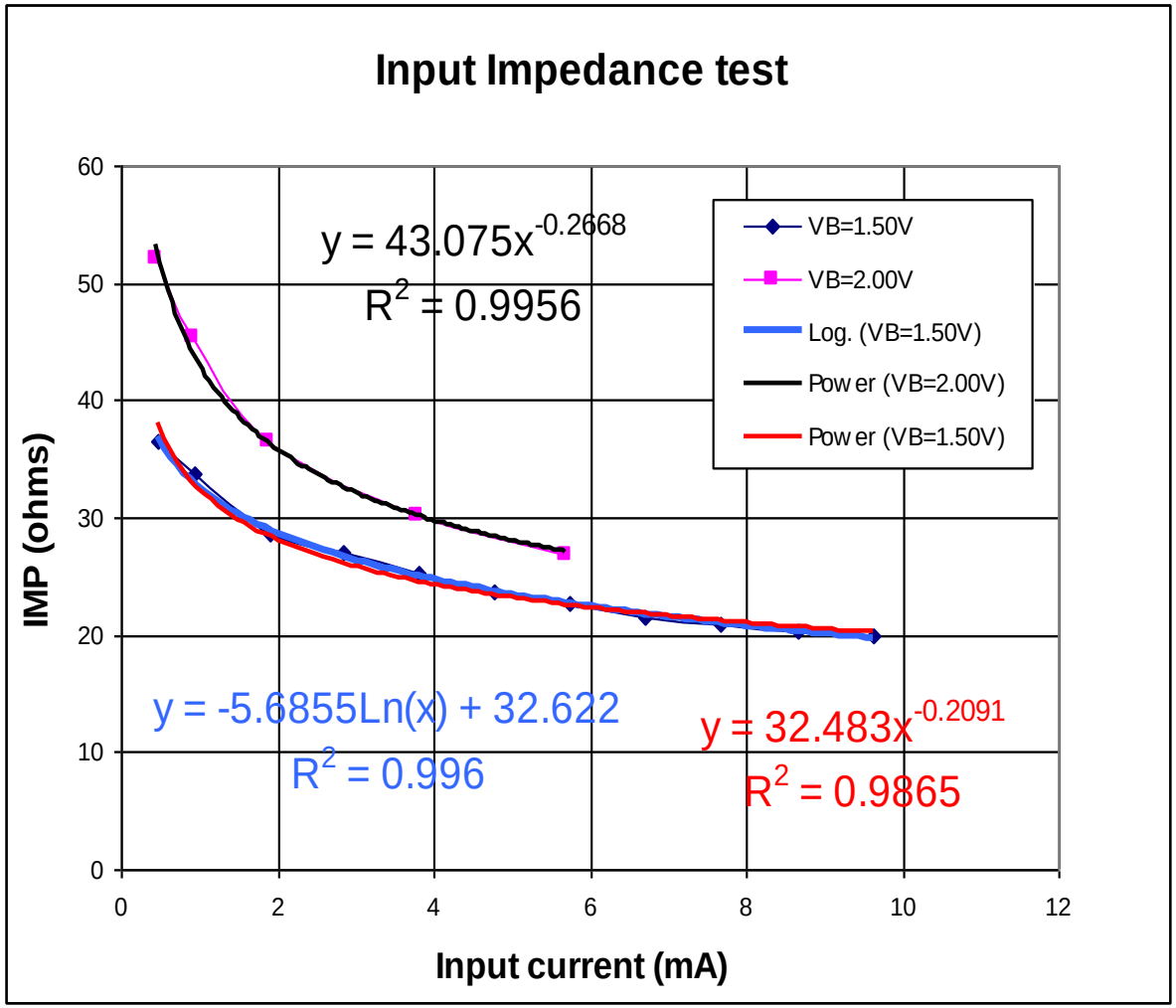

Time Jitter vs. Input

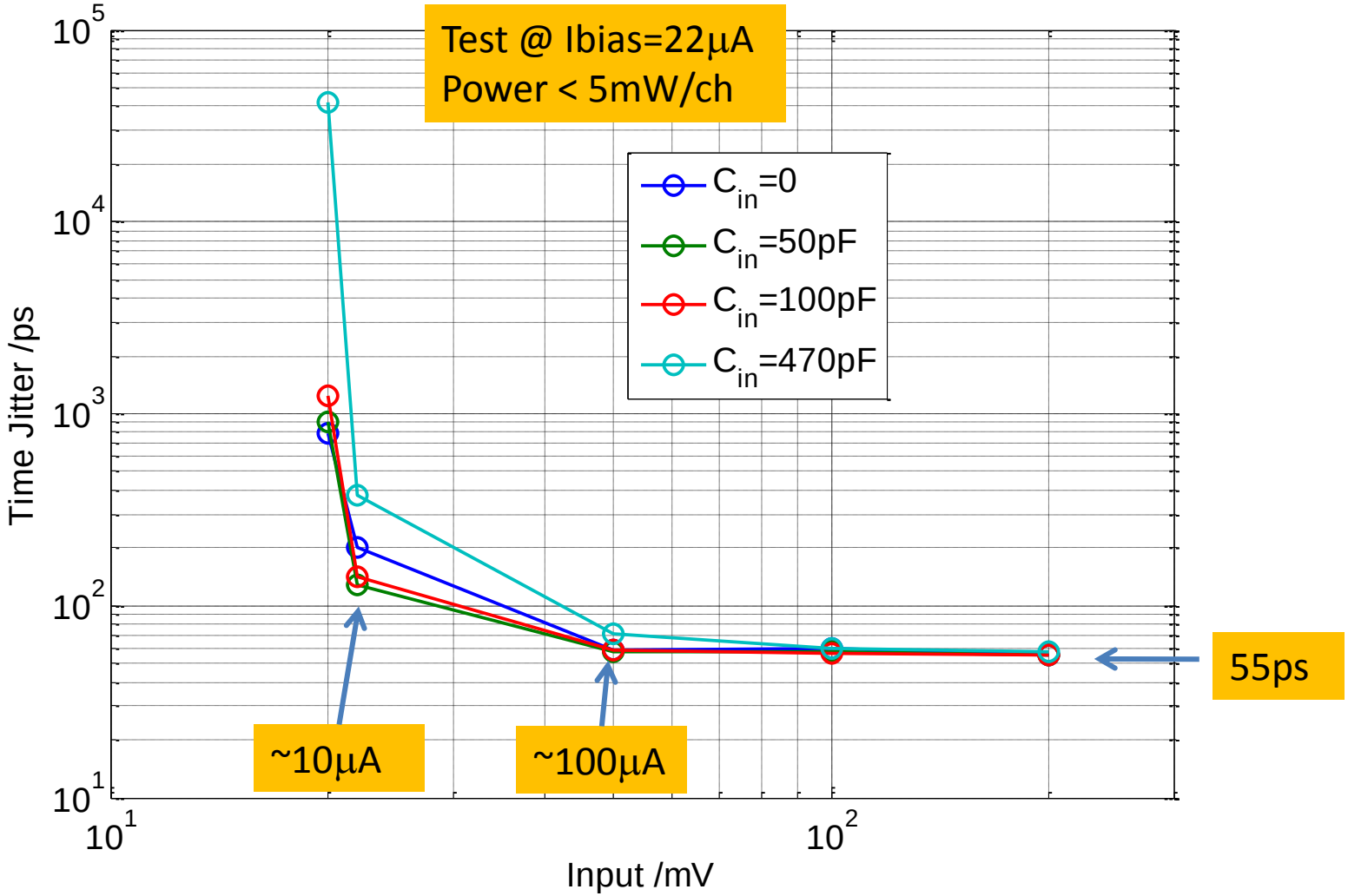

Time Jitter vs. Cin

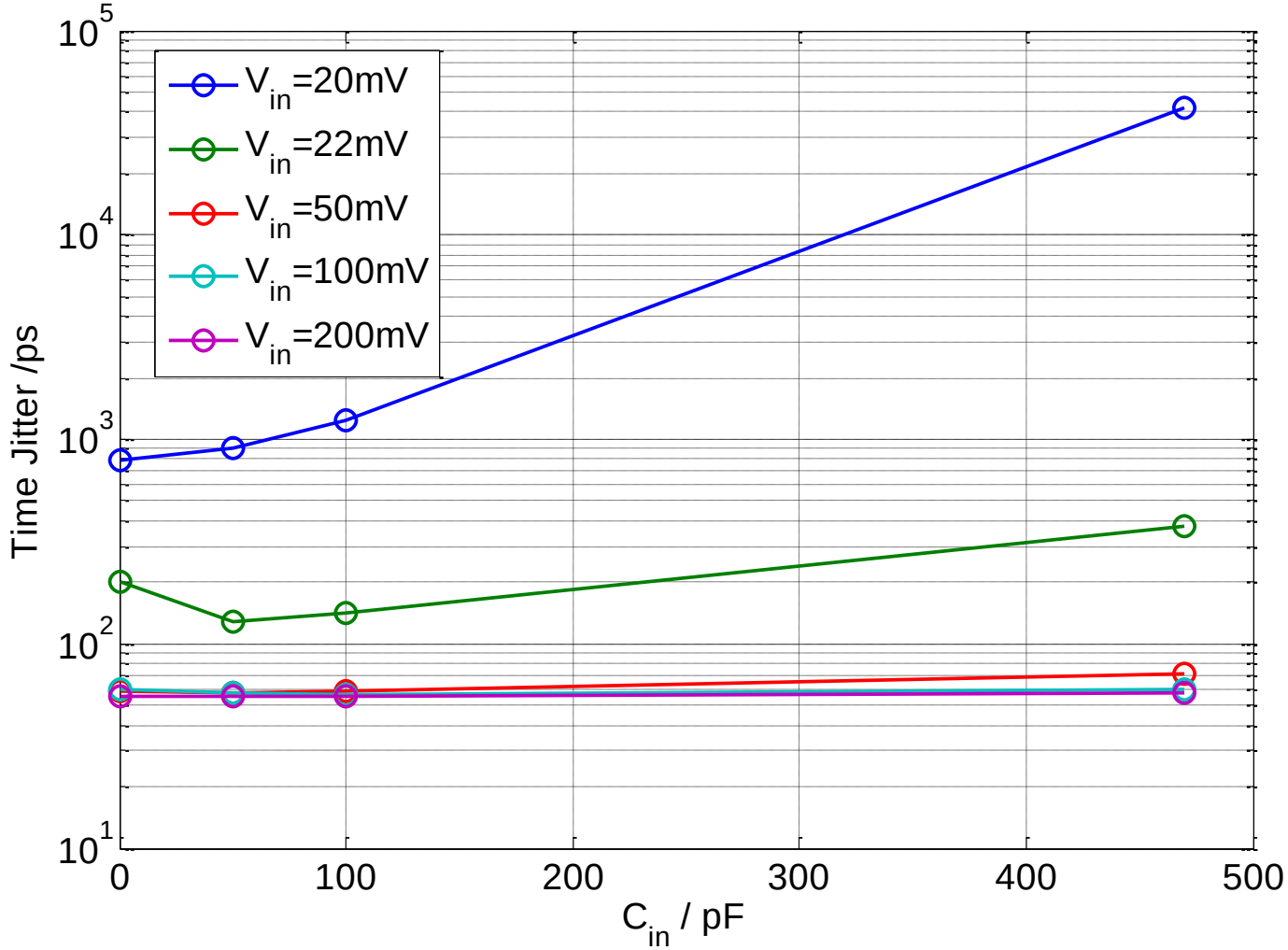

High Resolution FPGA based TDC

Vernier caliper method

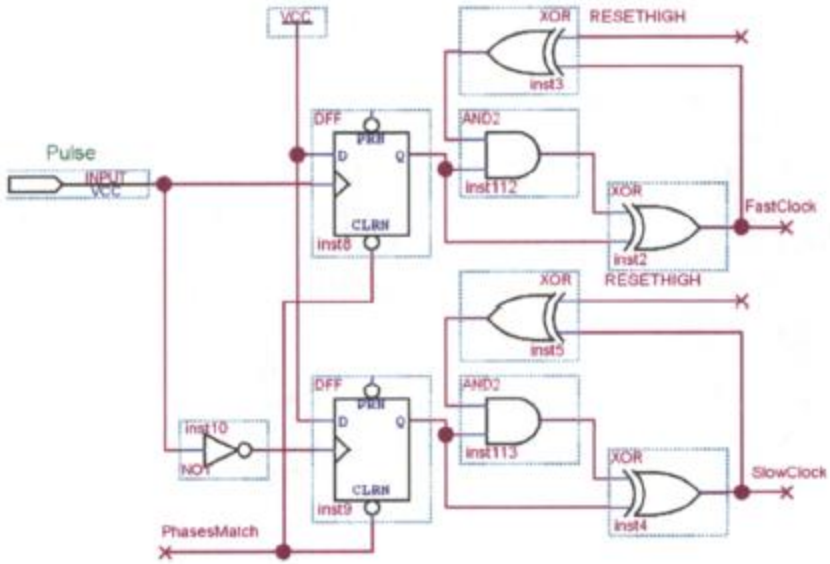

S.S. Junnarkar, P O'Connor et al., IEEE Nuclear Science Symposium Conference Record, 2008

Delay chain method

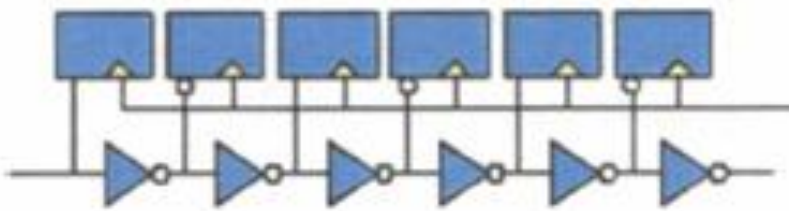

J. Wu and Z. Shi, IEEE Nuclear Science Symposium Conference Record, 2008

Implementation: Adder Carrier Chain

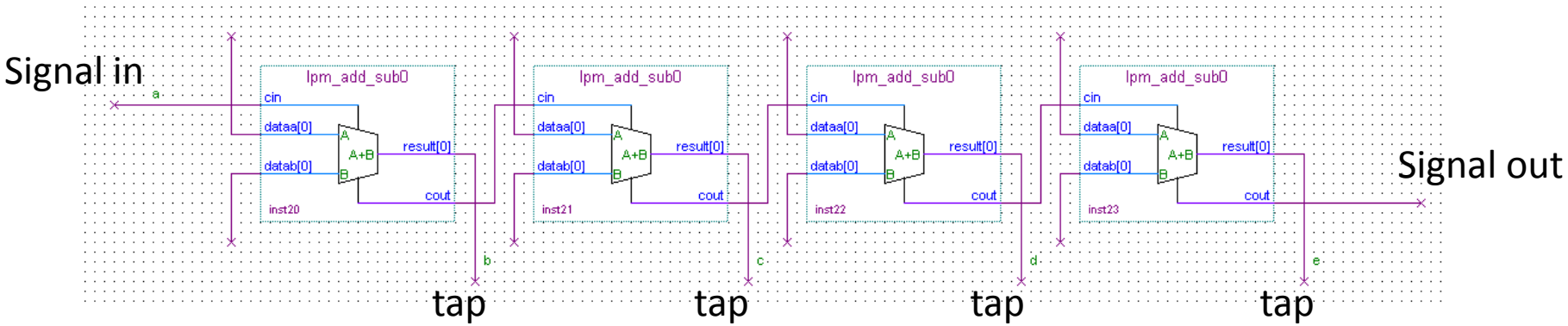

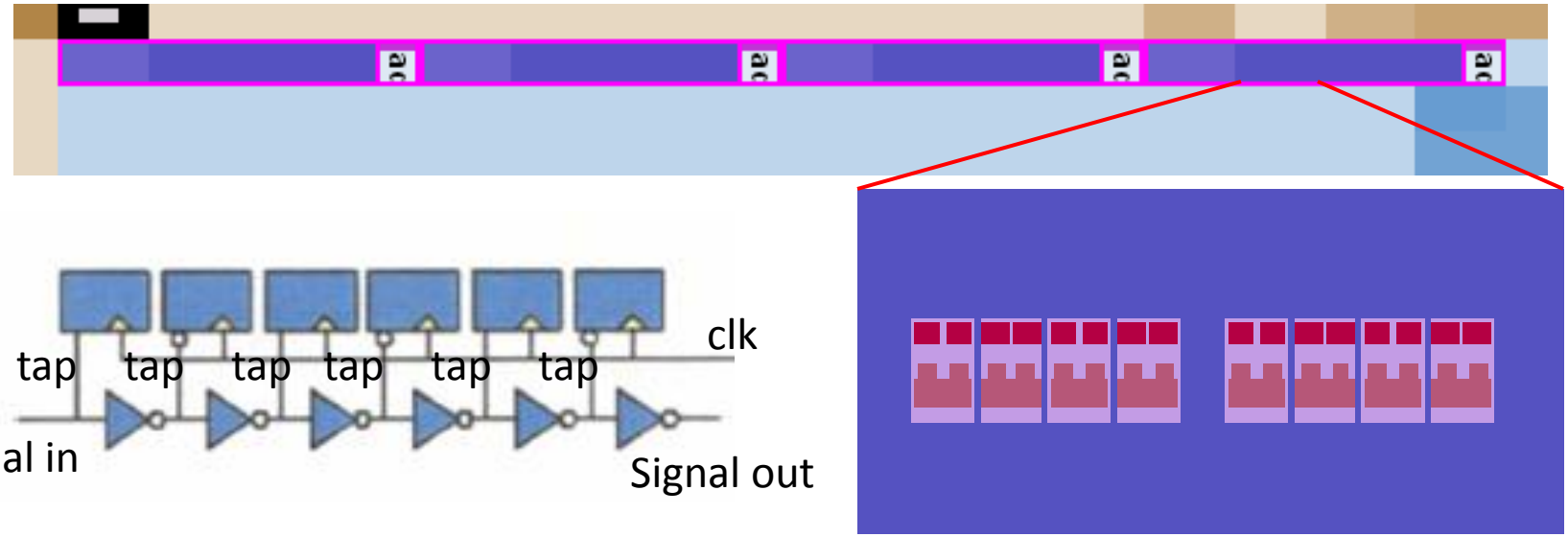

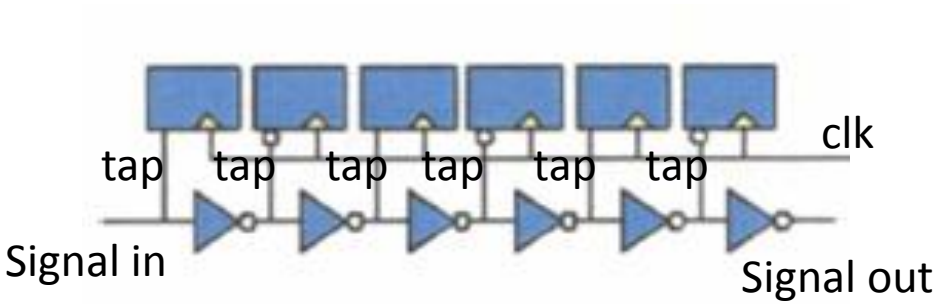

Calibration

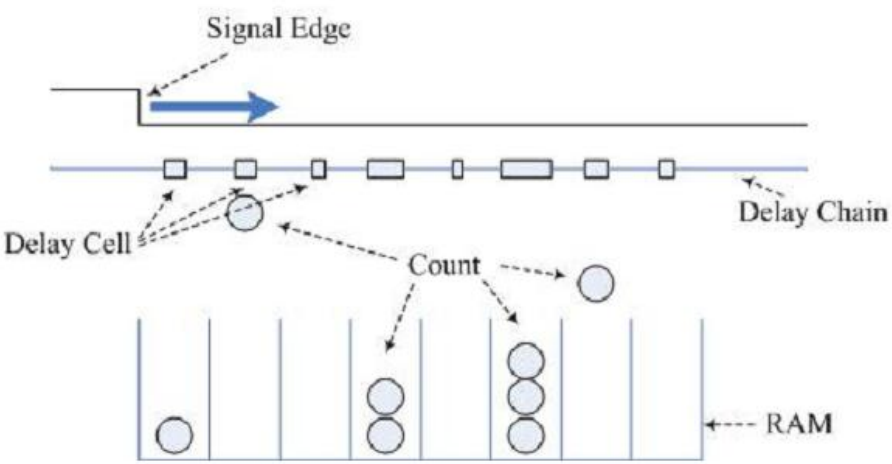

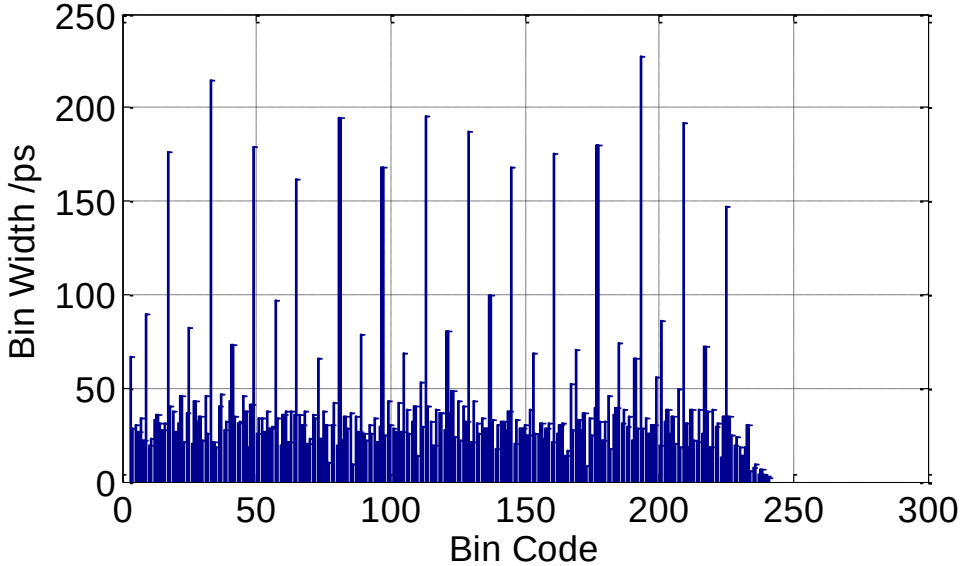

Time Resolution

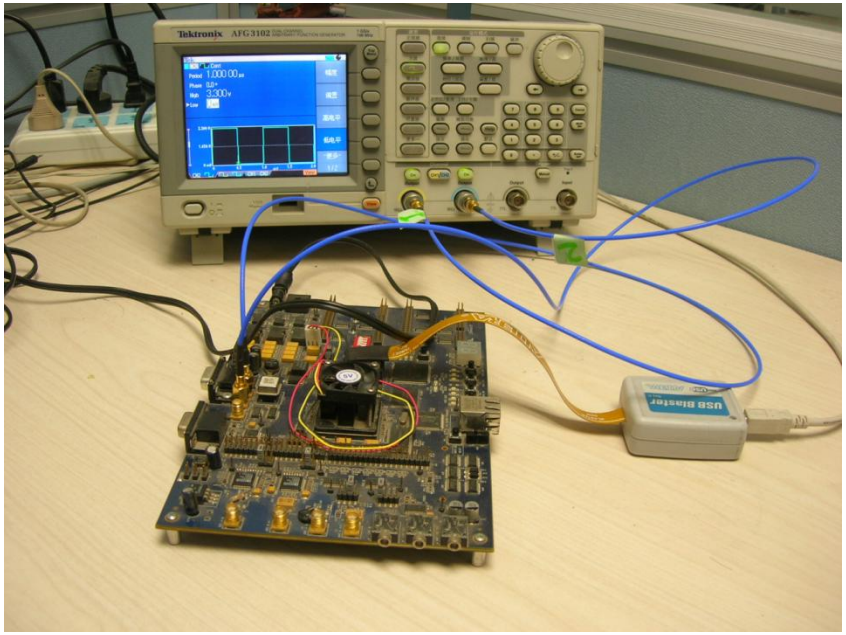

Altera StratixII EP2S60F1020C3

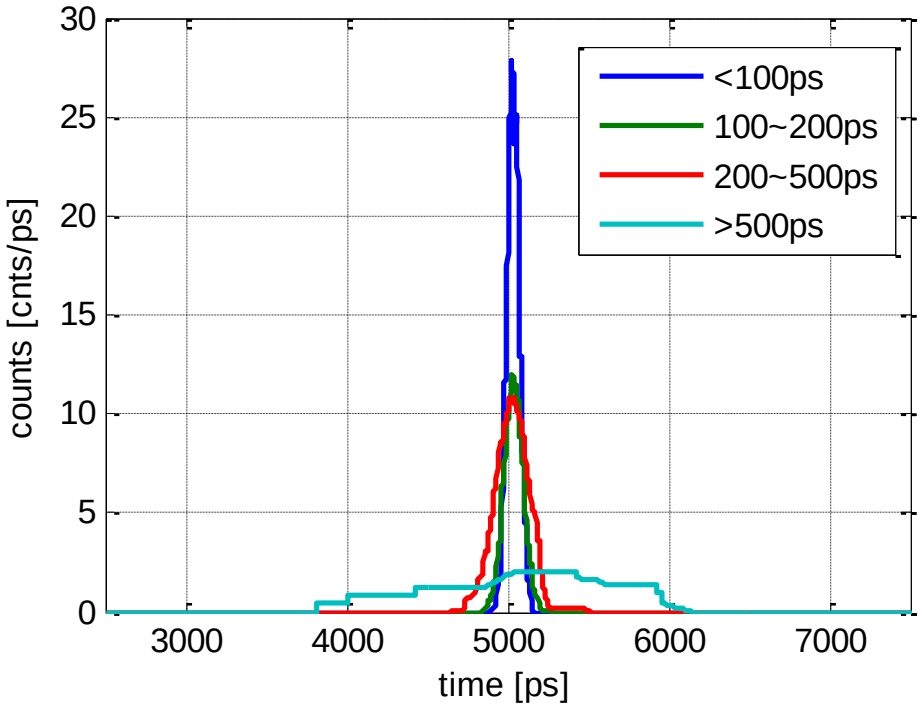

rms=38.7ps two channels
rms=27.4ps one channel
for bin width <50 ps

Wave Union TDC

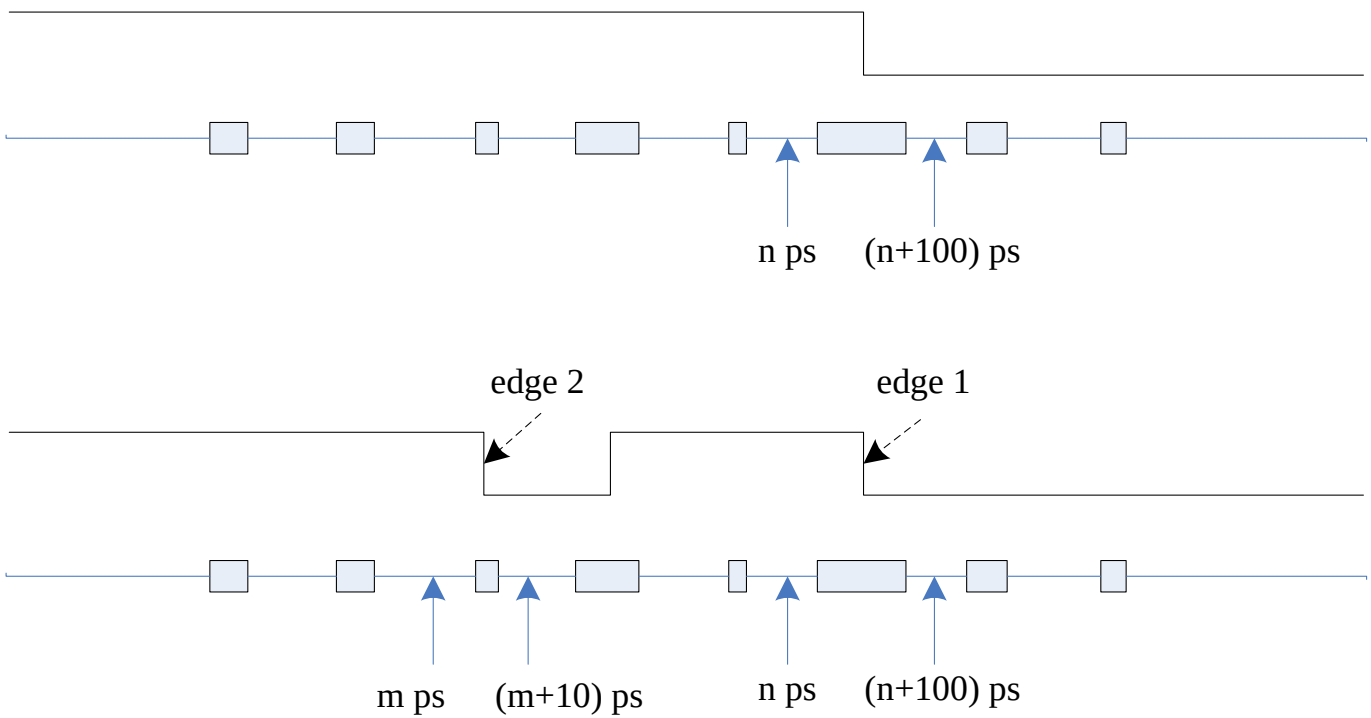

First proposed by J. Wu and Z. Shi @ 2008 IEEE Nuclear Science Symposium

Calibration of Multi-Wave TDC

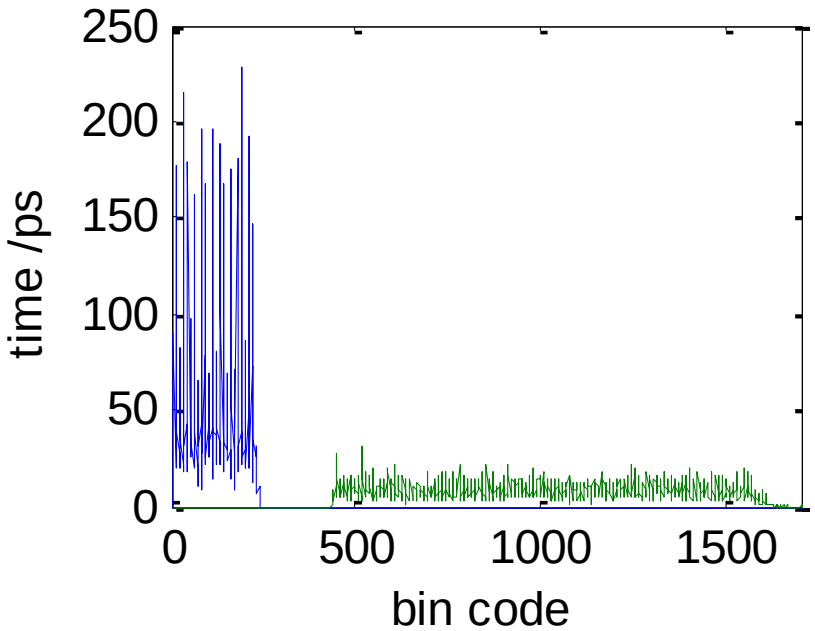

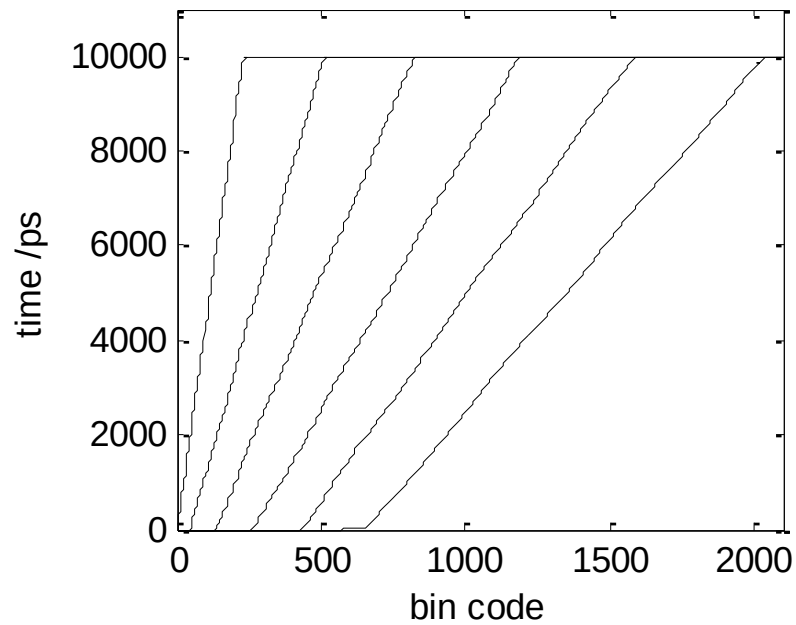

Improvement on Time Resolution

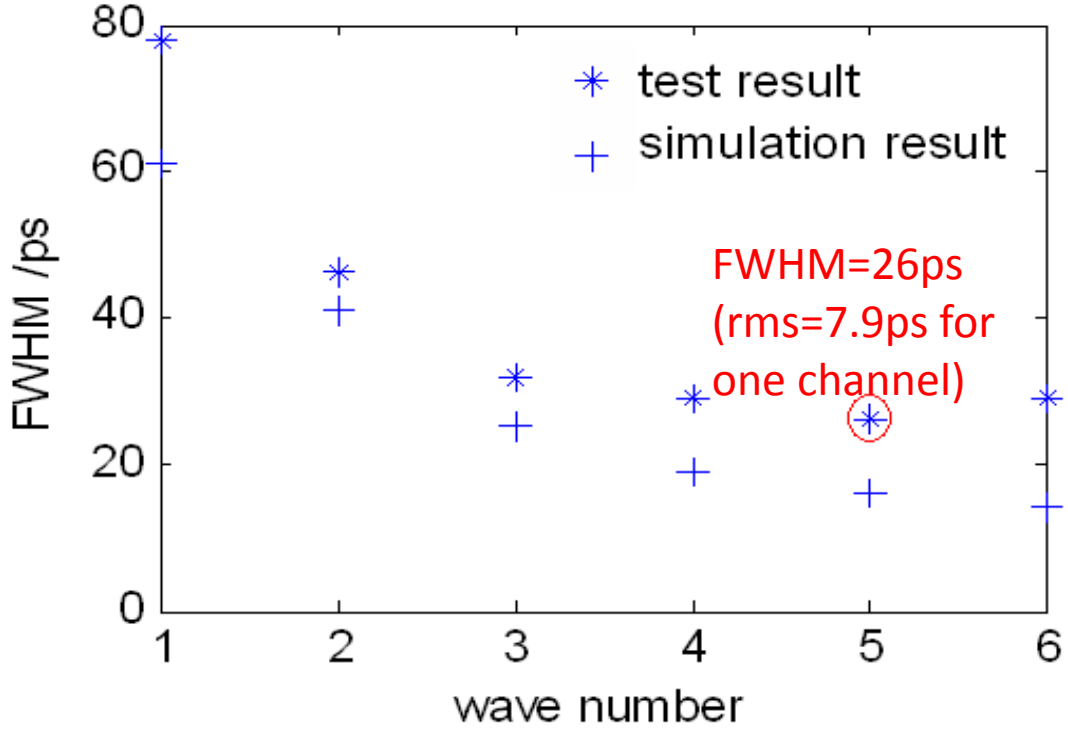

Compared to 10ps resolution using Altera Cyclone II EP2C8T144C6 by J. Wu @ 2008 IEEE NSS, Dresden

Linearity: DNL

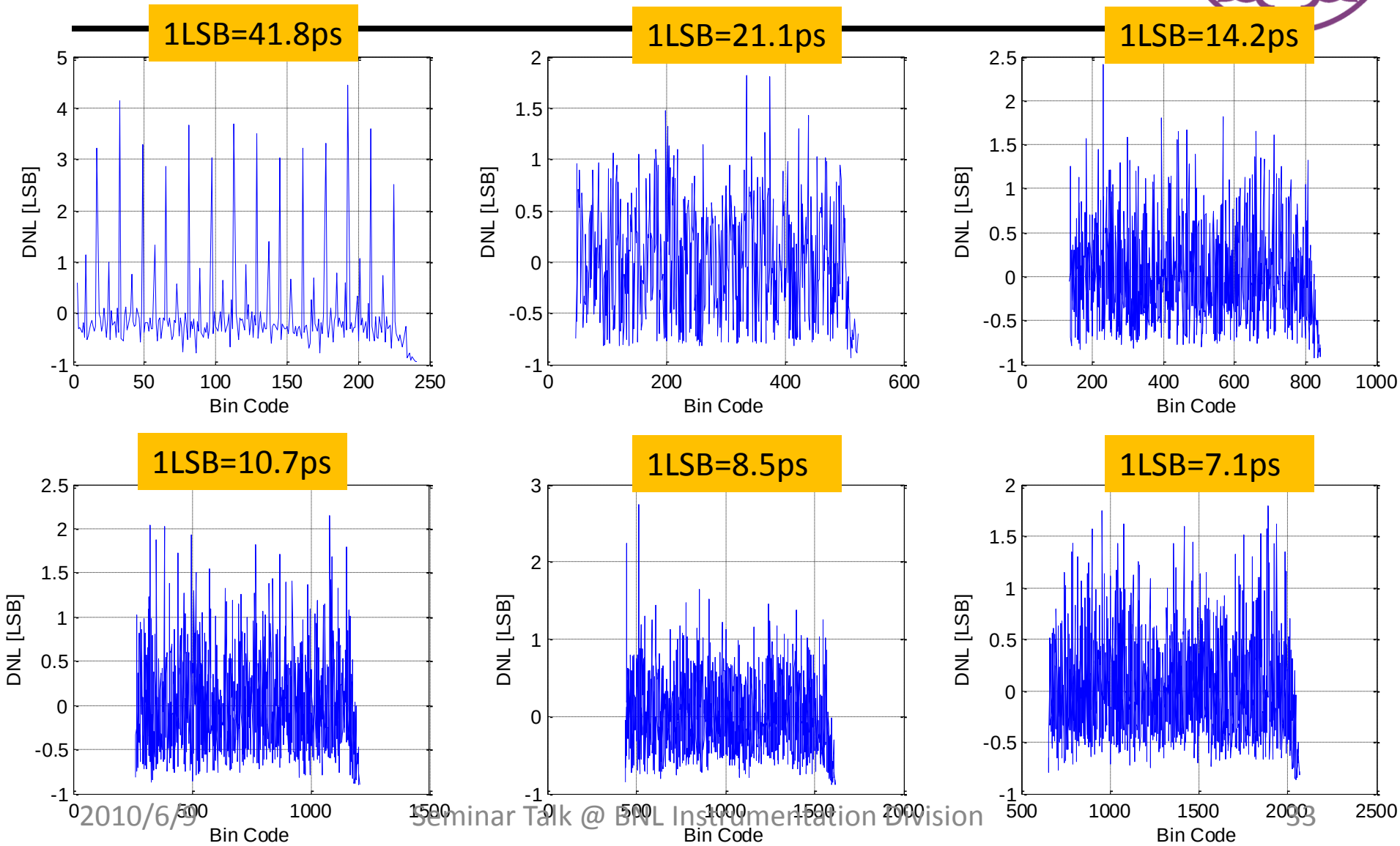

Linearity: INL

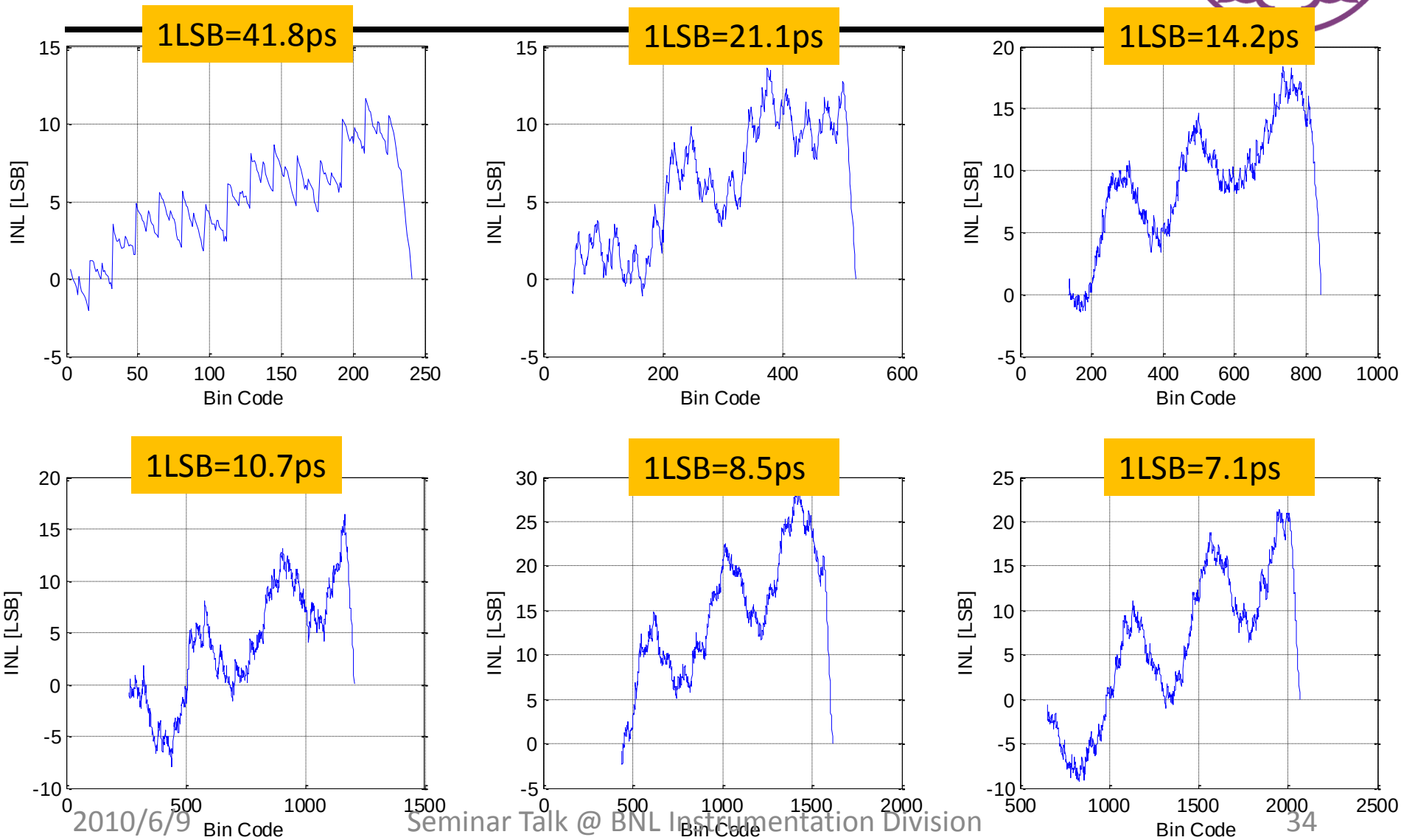

Resolution Dependence Puzzle

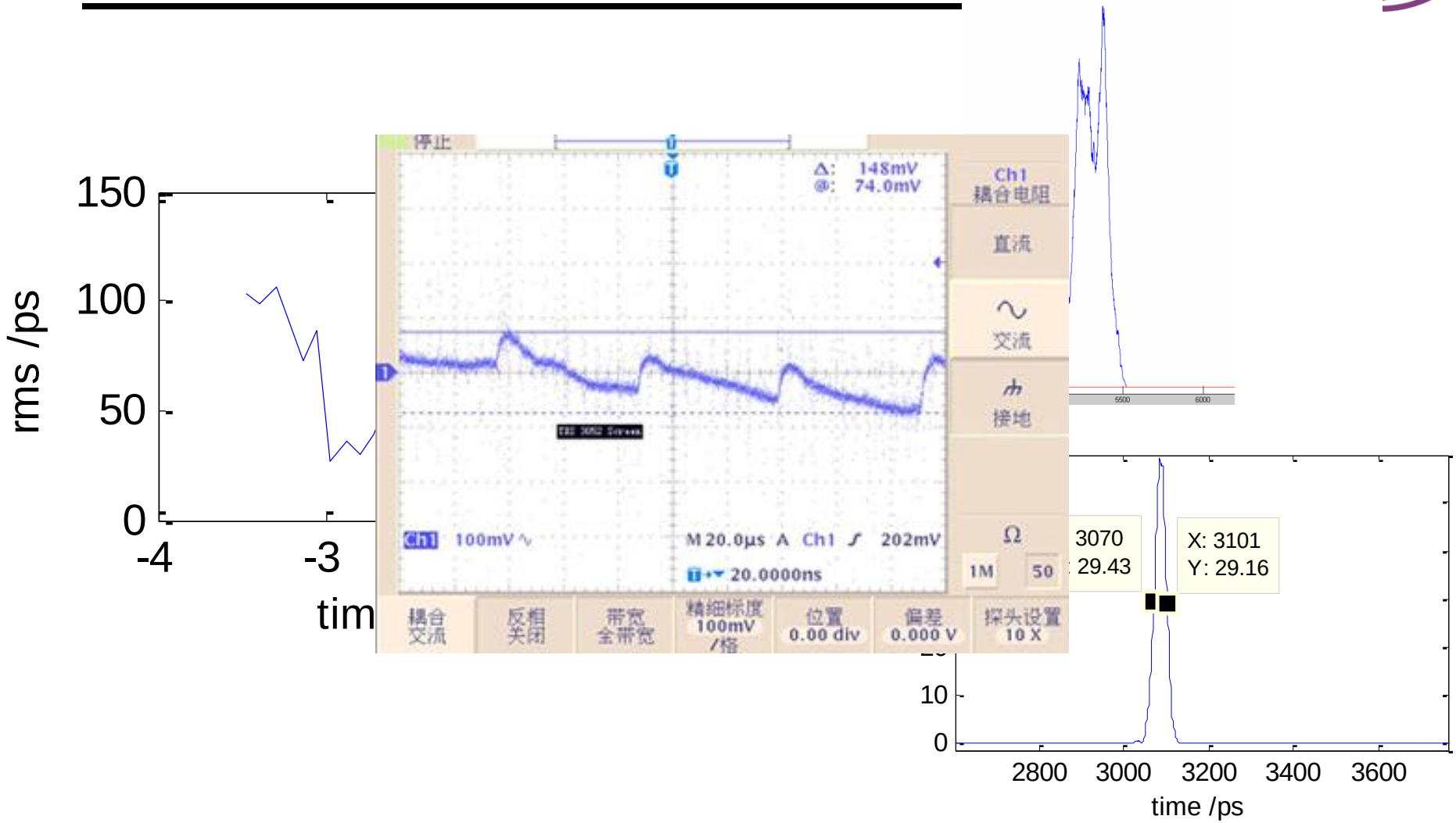

Elastic Delay-Chain

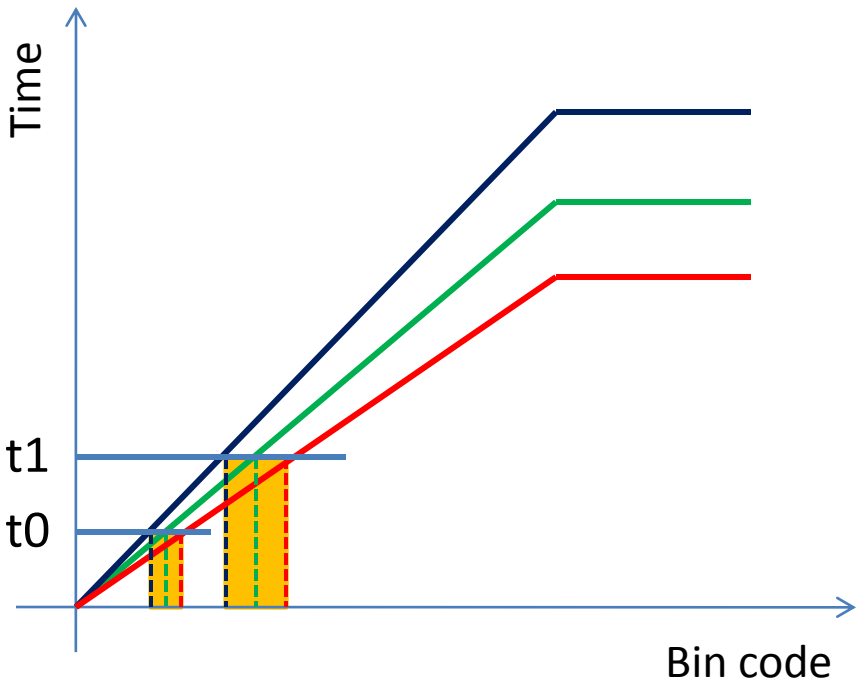

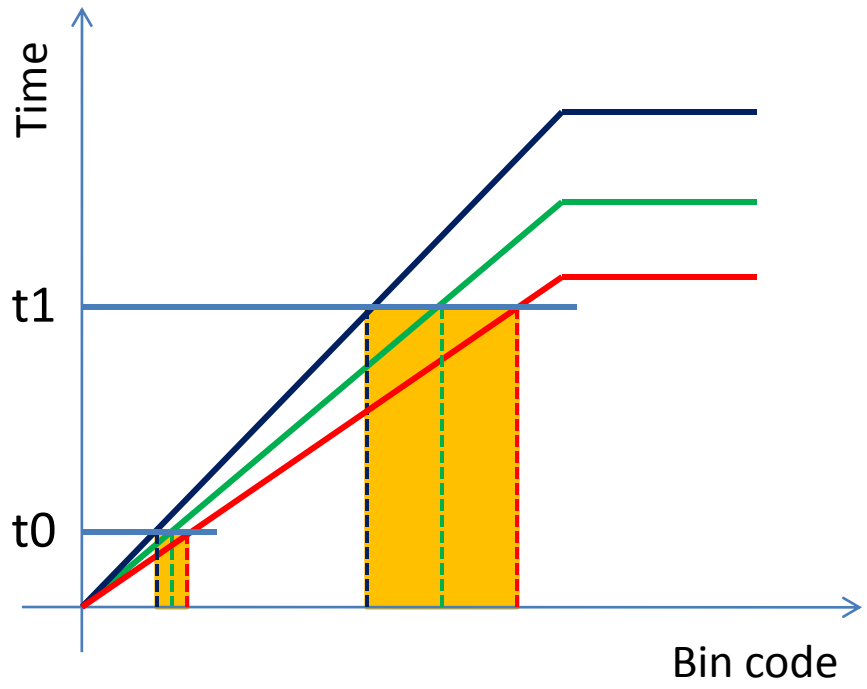

We assume that for the first order the delay chain stretches like a elastic band, so we can correct it by multiplying it by a coefficient

Real time Correction

- Add an additional delay chain to measure a fixed time delay generated by PLL and use it for bounce correction.

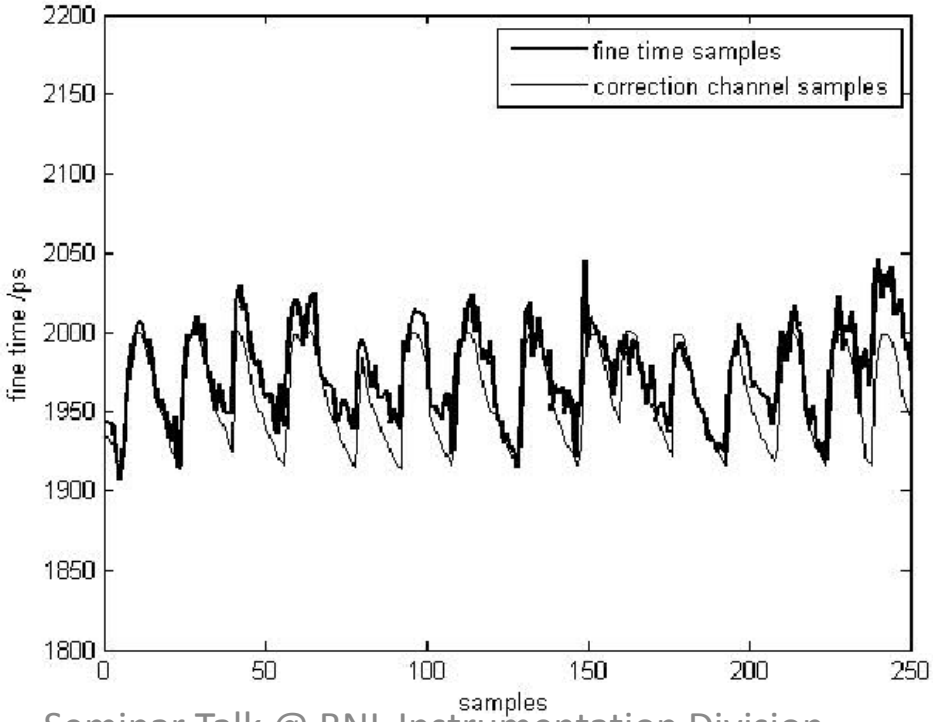

Corrected Results

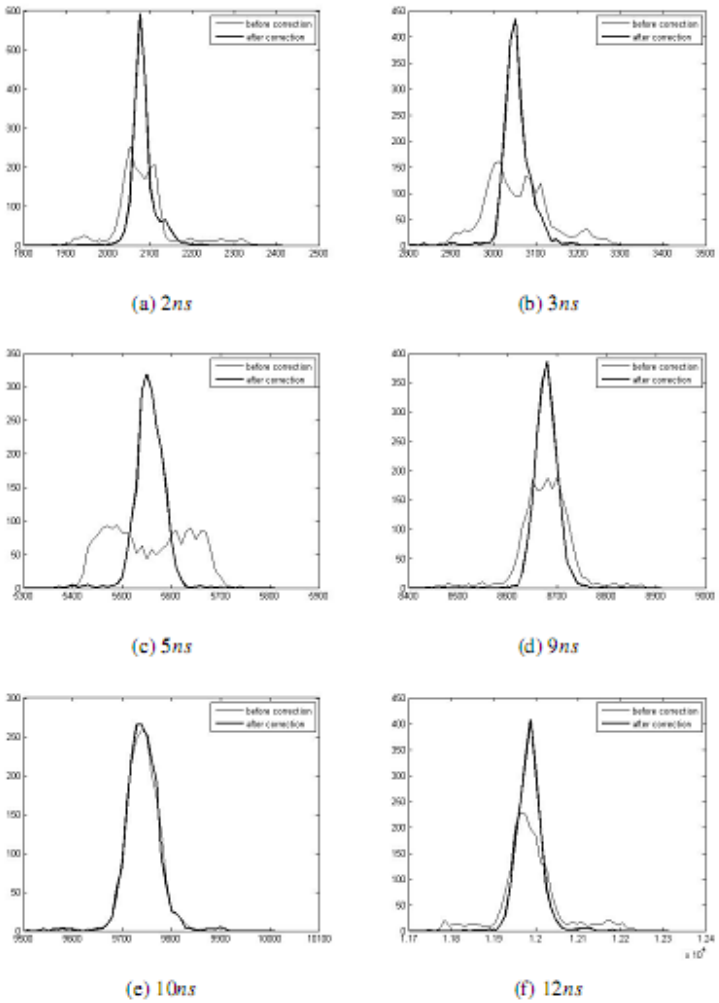

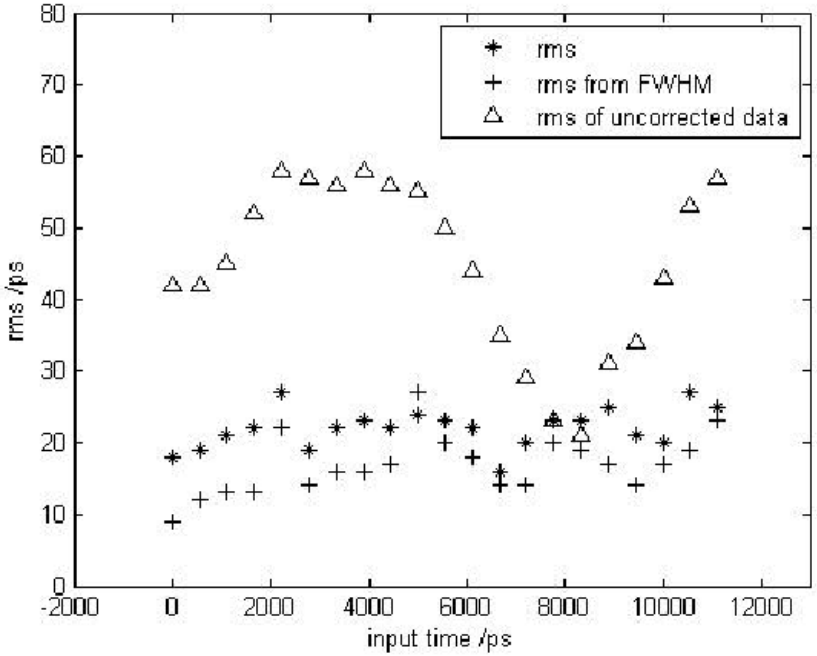

Summary

- MRPC is the golden detector for ion particle TOF measurement. Time resolution of ~10ps can be achieved with ~10m^2 large area and low cost.
- Fast and low power consumption ASIC readout electronics are essential for fully exploit the power of the detectors. A current mode frontend and FPGA based TDC have been designed and tested.

Acknowledgements

- ASIC Group:

  Yinong Liu, Ji Qi, Jie Luo, Li He, Xuezhou Zhu

- MRPC Detector Group:

  Yi Wang, Qian Yue, Jingbo Wang

- National Science Foundation of China