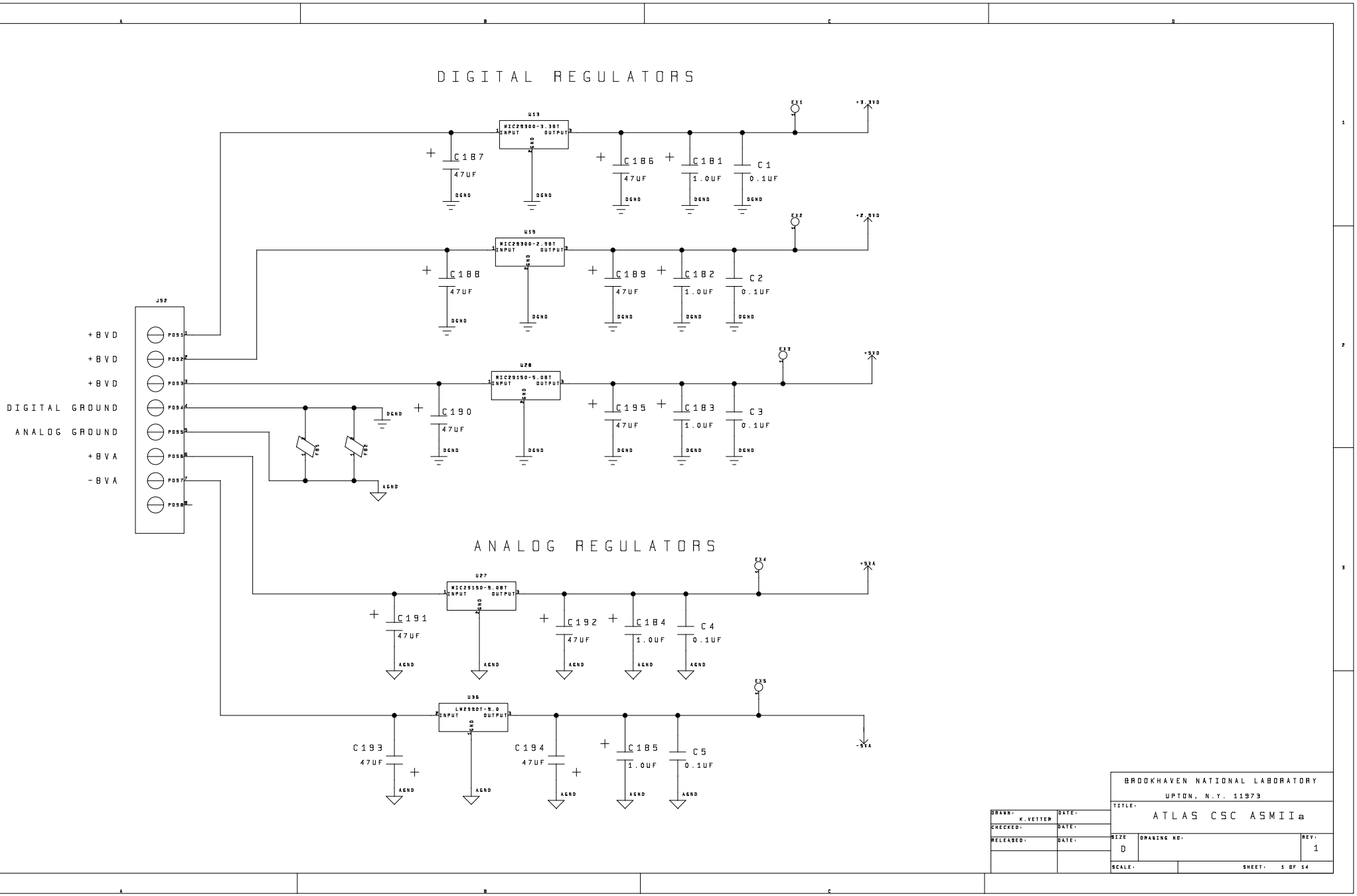

BROOKHAVEN NATIONAL LABORATORY	
UPTON, N.Y. 11973	
TITLE: ATLAS CSC ASMIIa	
DRAWN: K.VETTER	DATE:
CHECKED:	DATE:
RELEASED:	DATE:
SIZE: D	DRAWING NO:
REV: 1	
SCALE:	SHEET: 1 OF 14

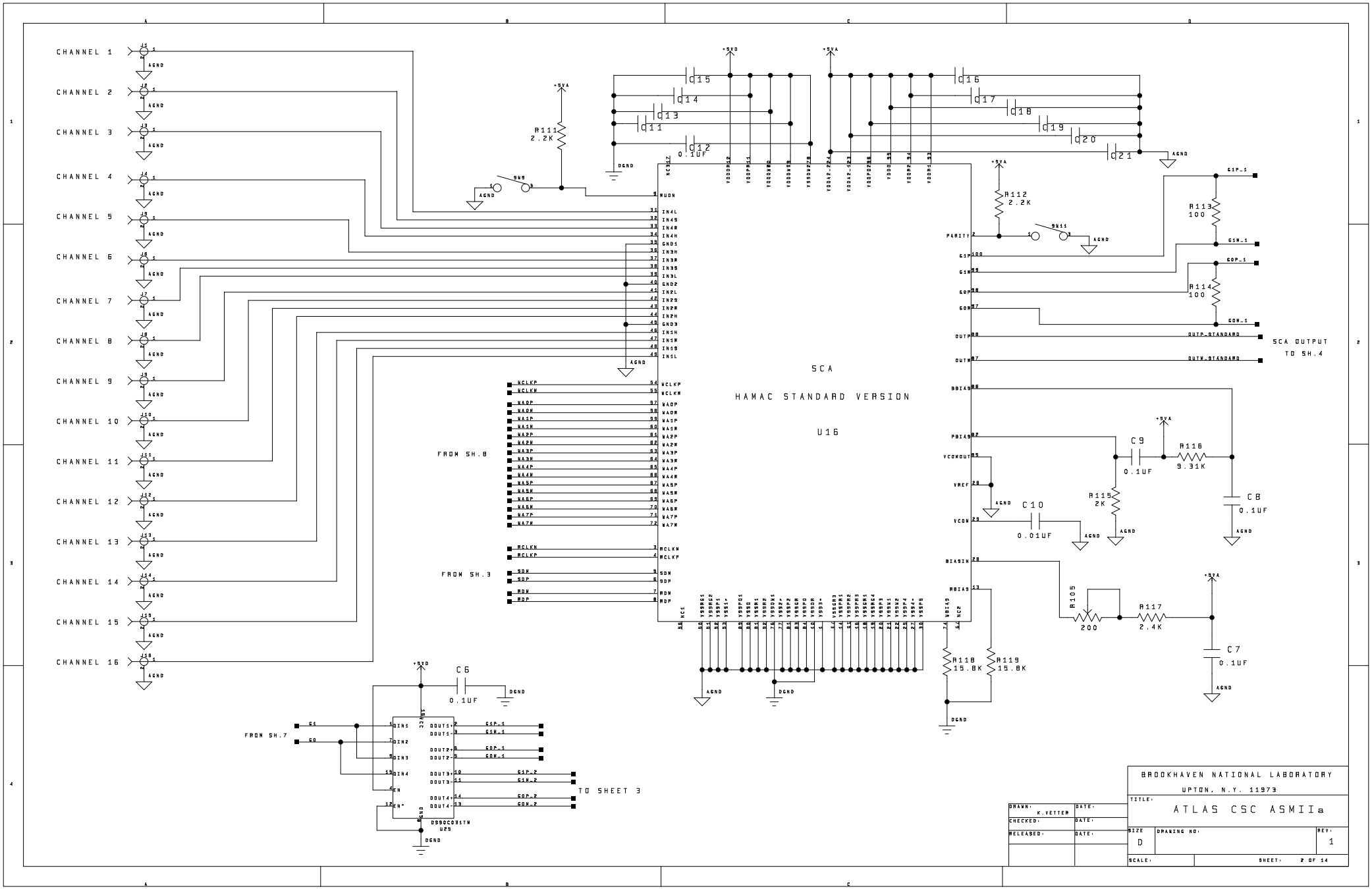
CHANNEL 1
CHANNEL 2
CHANNEL 3
CHANNEL 4
CHANNEL 5
CHANNEL 6
CHANNEL 7
CHANNEL 8
CHANNEL 9
CHANNEL 10
CHANNEL 11
CHANNEL 12
CHANNEL 13
CHANNEL 14
CHANNEL 15
CHANNEL 16
SCA
HAMAC STANDARD VERSION
U16
FROM SH.8
FROM SH.3
FROM SH.7
TO SHEET 3
SCA OUTPUT
TO SH.4
R111
2.2K
R112
2.2K
R113
100
R114
100
R115
2K
R116
9.31K
R117
2.4K
R118
15.8K
R119
15.8K
R105
200
C6
0.1UF
C7
0.1UF
C8
0.1UF
C9
0.1UF
C10
0.01UF
C11
C12
0.1UF
C13
C14
C15
C16
C17
C18
C19
C20
C21
DS90C031TM
U25
BROOKHAVEN NATIONAL LABORATORY
UPTON, N.Y. 11973
TITLE:
ATLAS CSC ASMIIa
DRAWN: K.VETTER
CHECKED:
RELEASED:
DATE:
SIZE D
DRAWING NO:
REV: 1
SCALE:
SHEET: 2 OF 14

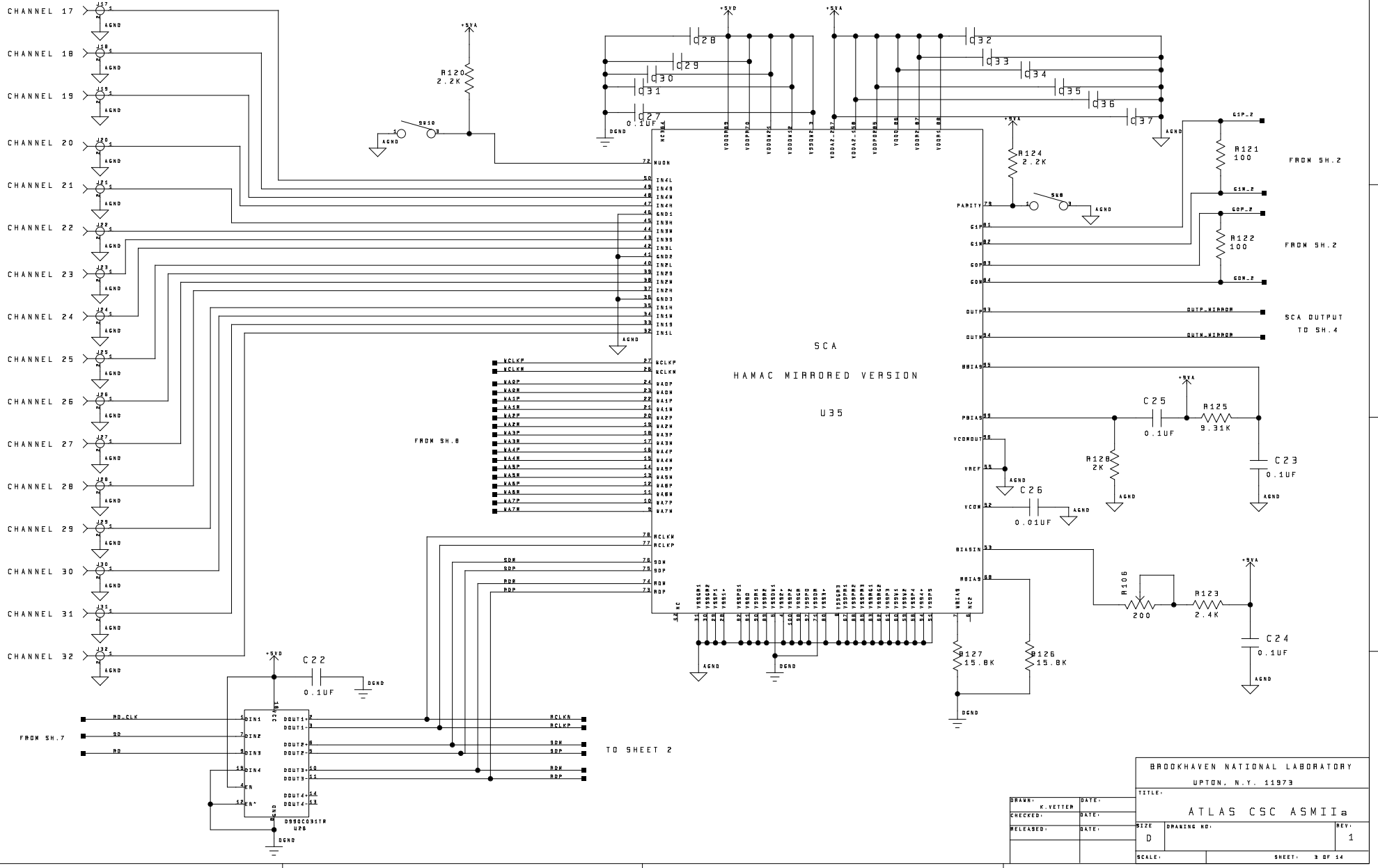
CHANNEL 17
CHANNEL 18
CHANNEL 19
CHANNEL 20
CHANNEL 21
CHANNEL 22
CHANNEL 23
CHANNEL 24
CHANNEL 25
CHANNEL 26
CHANNEL 27
CHANNEL 28
CHANNEL 29
CHANNEL 30
CHANNEL 31
CHANNEL 32
AGND
+5VA
+5VD
DGND
R120
2.2K
SW10
C27
0.1UF
C28
C29
C30
C31
C32
C33
C34
C35
C36
C37
R124
2.2K
SW8
PARITY
R121
100
R122
100
FROM SH.2
FROM SH.2
SCA OUTPUT
TO SH.4
SCA
HAMAC MIRRORED VERSION
U35
FROM SH.8
C25
0.1UF
R125
9.31K
R128
2K
C23
0.1UF
C26
0.01UF
R106
200
R123
2.4K
C24
0.1UF
R127
15.8K
R126
15.8K
C22
0.1UF
RD_CLK
SR
RD
FROM SH.7
DS90C031TM
U28
TO SHEET 2
BROOKHAVEN NATIONAL LABORATORY
UPTON, N.Y. 11973
TITLE:
ATLAS CSC ASMIIa
DRAWN: K.VETTER
CHECKED:
RELEASED:
DATE:
SIZE D
DRAWING NO:
REV: 1
SCALE:
SHEET: 3 OF 14

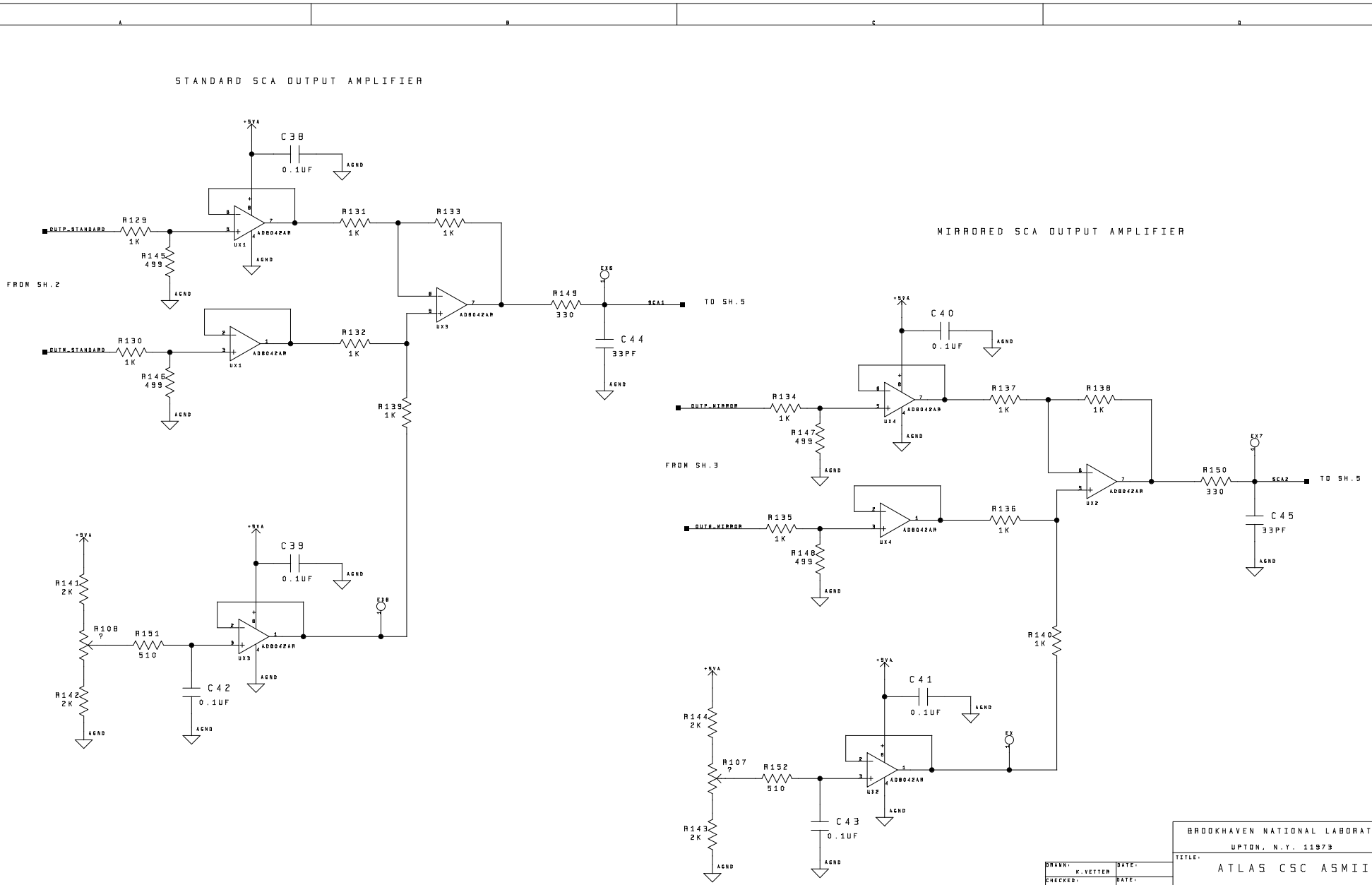

DRAWN: K.VETTER	DATE:	BROOKHAVEN NATIONAL LABORATORY	
CHECKED:	DATE:	UPTON, N.Y. 11973	
RELEASED:	DATE:	TITLE: ATLAS CSC ASMIIa	
		SIZE: D	DRAWING NO: REV: 1
		SCALE:	SHEET: 4 OF 14

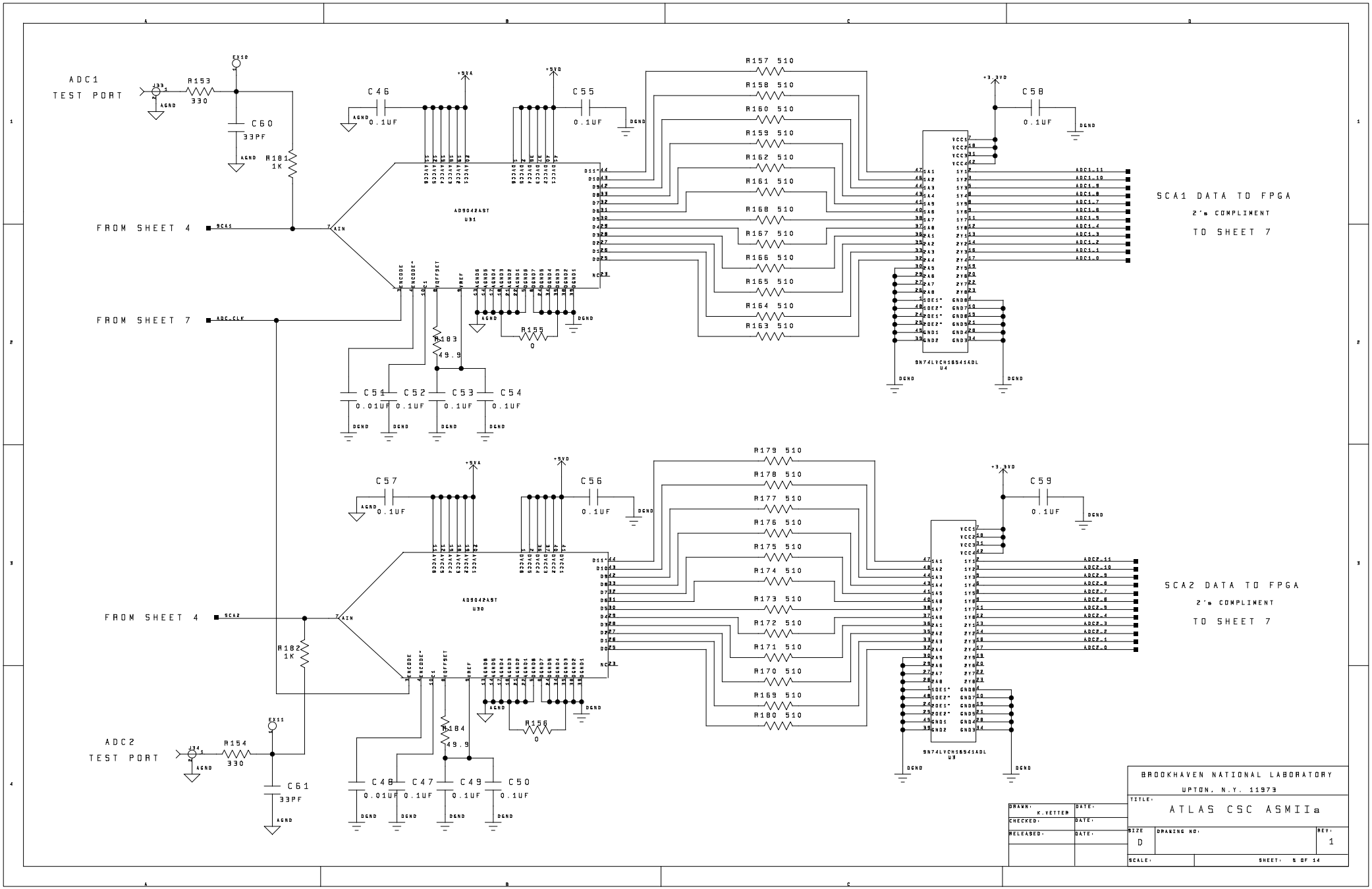
ADC1
TEST PORT
J33
R153
330
EX10
C60
33PF
R181
1K
FROM SHEET 4
SCA1
FROM SHEET 7
ADC_CLK
C46
0.1UF
C55
0.1UF
+5VA
+5VD
AD9042AST
U31
R157 510
R158 510
R160 510
R159 510
R162 510
R161 510
R168 510
R167 510
R166 510
R165 510
R164 510
R163 510
R155
0
R183
49.9
C51
0.01UF
C52
0.1UF
C53
0.1UF
C54
0.1UF
C58
0.1UF
+3.3VD
SN74LVCH16541ADL
U4
SCA1 DATA TO FPGA
2's COMPLIMENT
TO SHEET 7
C57
0.1UF
C56
0.1UF
AD9042AST
U30
R179 510
R178 510
R177 510
R176 510
R175 510
R174 510
R173 510
R172 510
R171 510
R170 510
R169 510
R180 510
C59
0.1UF
SN74LVCH16541ADL
U3
SCA2 DATA TO FPGA
2's COMPLIMENT
TO SHEET 7
FROM SHEET 4
SCA2
R182
1K
ADC2
TEST PORT
J34
R154
330
EX11
C61
33PF
R156
0
R184
49.9
C48
0.01UF
C47
0.1UF
C49
0.1UF
C50
0.1UF
BROOKHAVEN NATIONAL LABORATORY
UPTON, N.Y. 11973
TITLE:
ATLAS CSC ASMIIa
DRAWN: K.VETTER
DATE:
CHECKED:
DATE:
RELEASED:
DATE:
SIZE
D
DRAWING NO:
REV:
1
SCALE:
SHEET: 5 OF 14

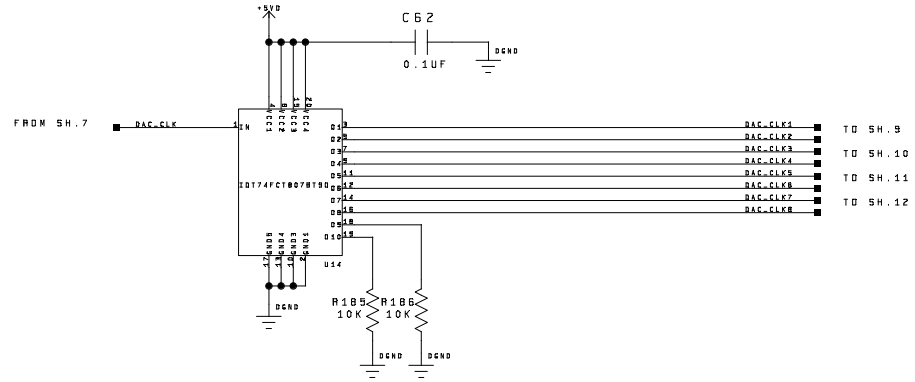

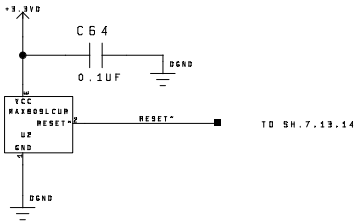

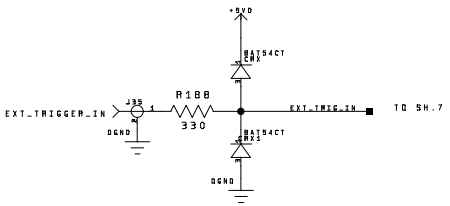

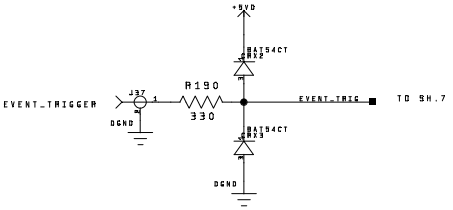

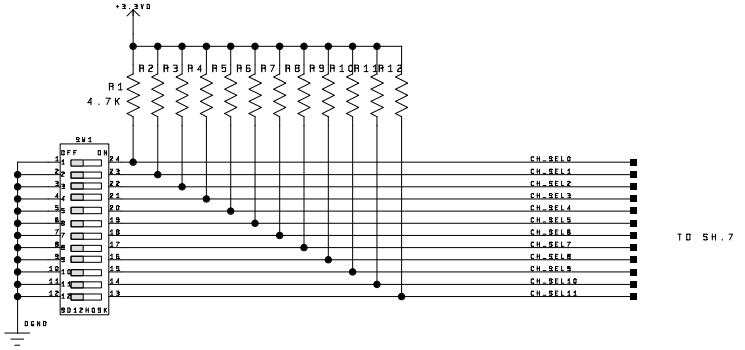

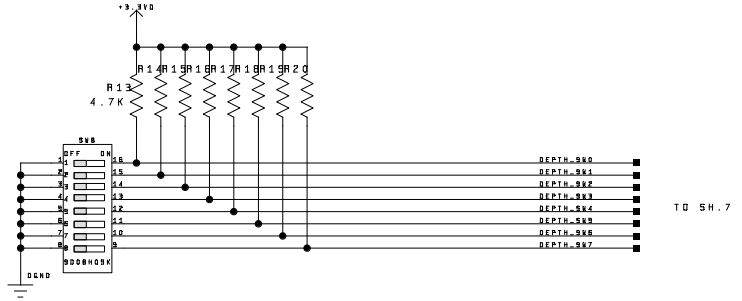

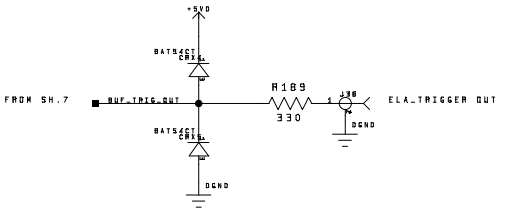

BROOKHAVEN NATIONAL LABORATORY		
UPTON, N.Y. 11973		
TITLE: ATLAS CSC ASMIIa		
DRAWN: K.VETTER	DATE:	
CHECKED:	DATE:	
RELEASED:	DATE:	
SIZE: D	DRAWING NO:	REV: 1
SCALE:	SHEET: 6 OF 14	

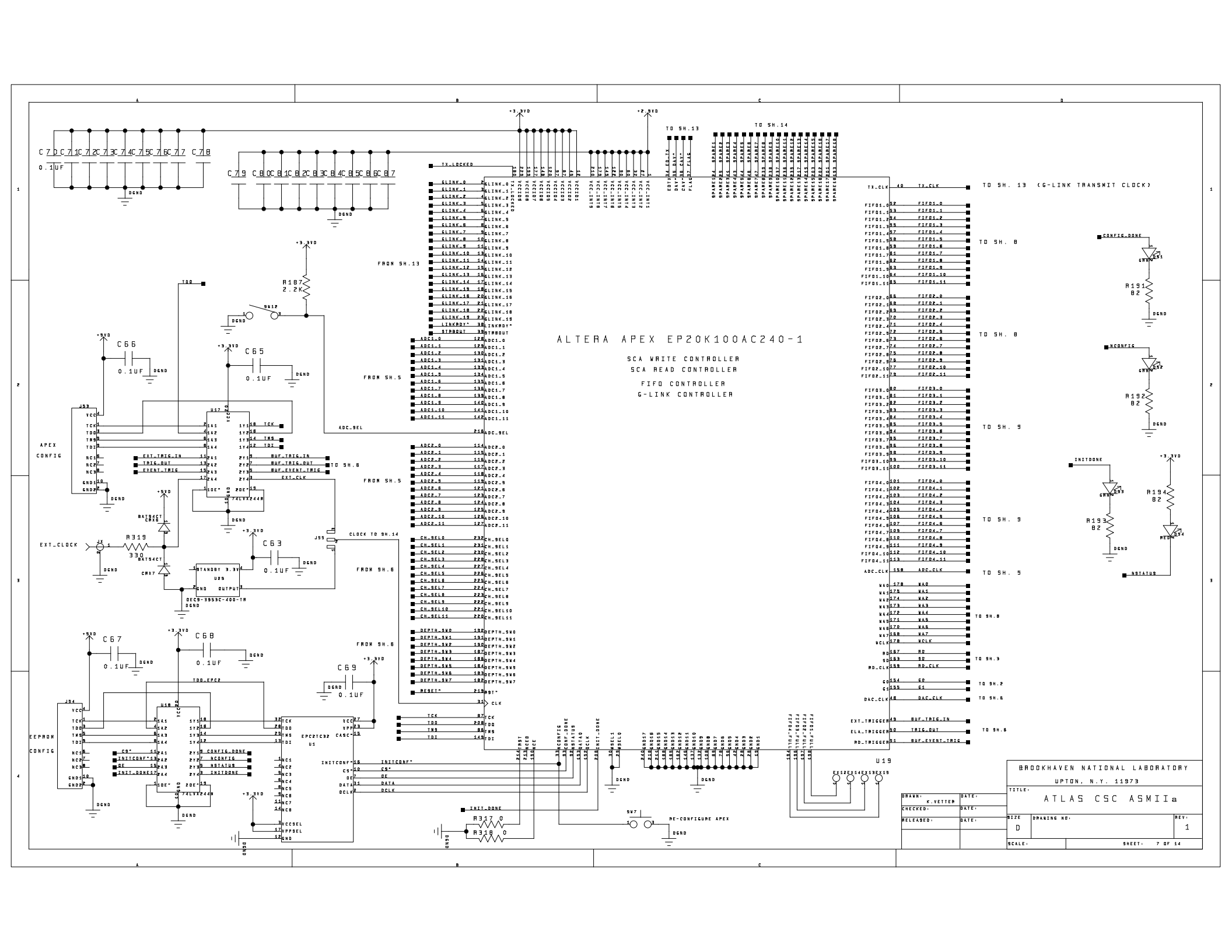
ALTERA APEX EP20K100AC240-1
SCA WRITE CONTROLLER
SCA READ CONTROLLER
FIFO CONTROLLER
G-LINK CONTROLLER
TO 5H.13 (G-LINK TRANSMIT CLOCK)
TO 5H. 8
TO 5H. 9
TO 5H. 5
TO 5H.6
TO 5H.2
TO 5H.3
FROM 5H.13
FROM 5H.5
FROM 5H.6
CLOCK TO 5H.14
APEX CONFIG
EEPROM CONFIG
EPC2TC32
74LVX244M
RE-CONFIGURE APEX
BROOKHAVEN NATIONAL LABORATORY
UPTON, N.Y. 11973
ATLAS CSC ASMIIa
K.VETTER
SIZE D
REV: 1
SCALE:
SHEET: 7 OF 14

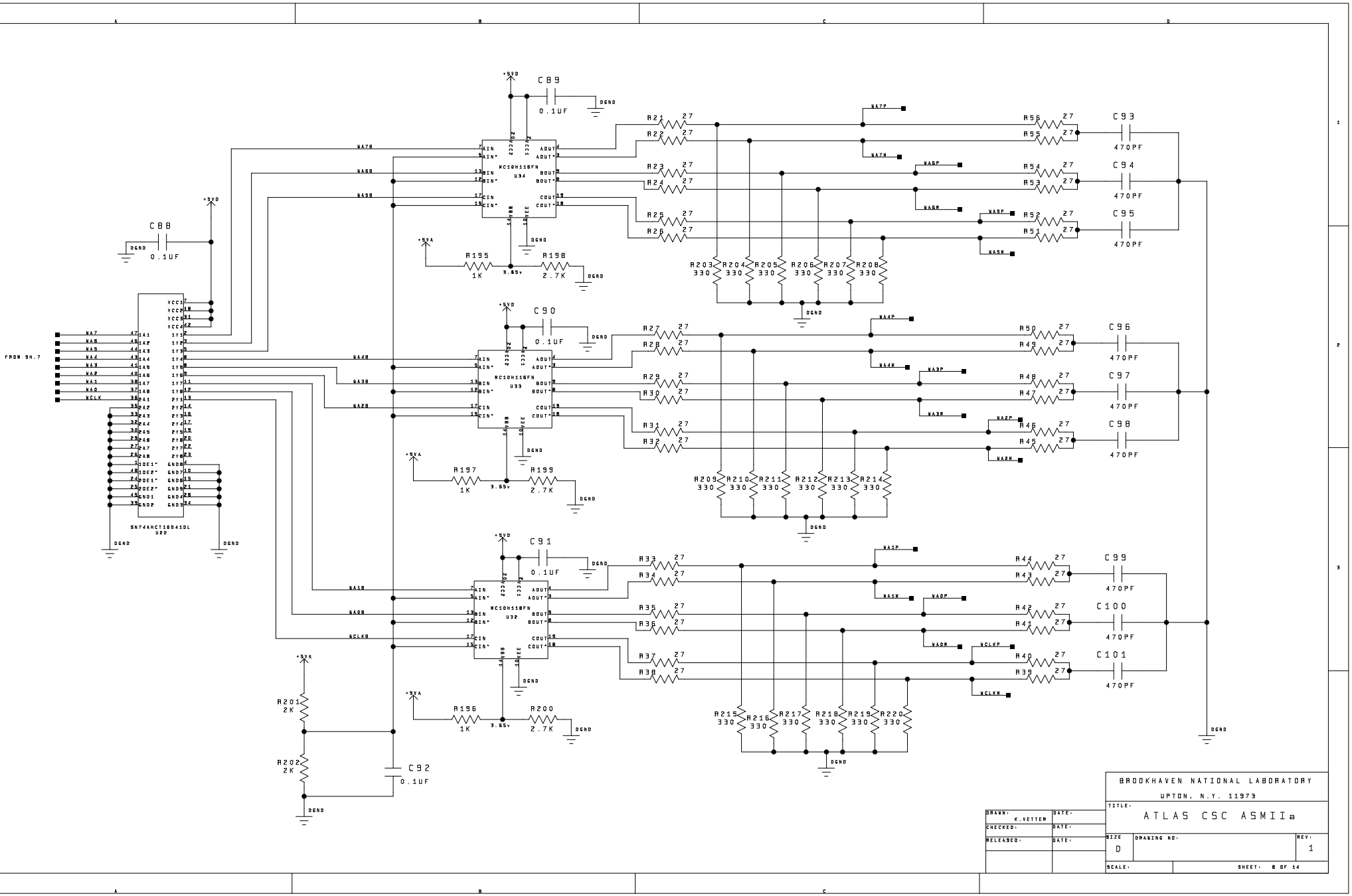

BROOKHAVEN NATIONAL LABORATORY	
UPTON, N.Y. 11973	
TITLE: ATLAS CSC ASMIIa	
DRAWN: K.VETTER	DATE:
CHECKED:	DATE:
RELEASED:	DATE:
SIZE: D	DRAWING NO:
REV: 1	
SCALE:	SHEET: 8 OF 14

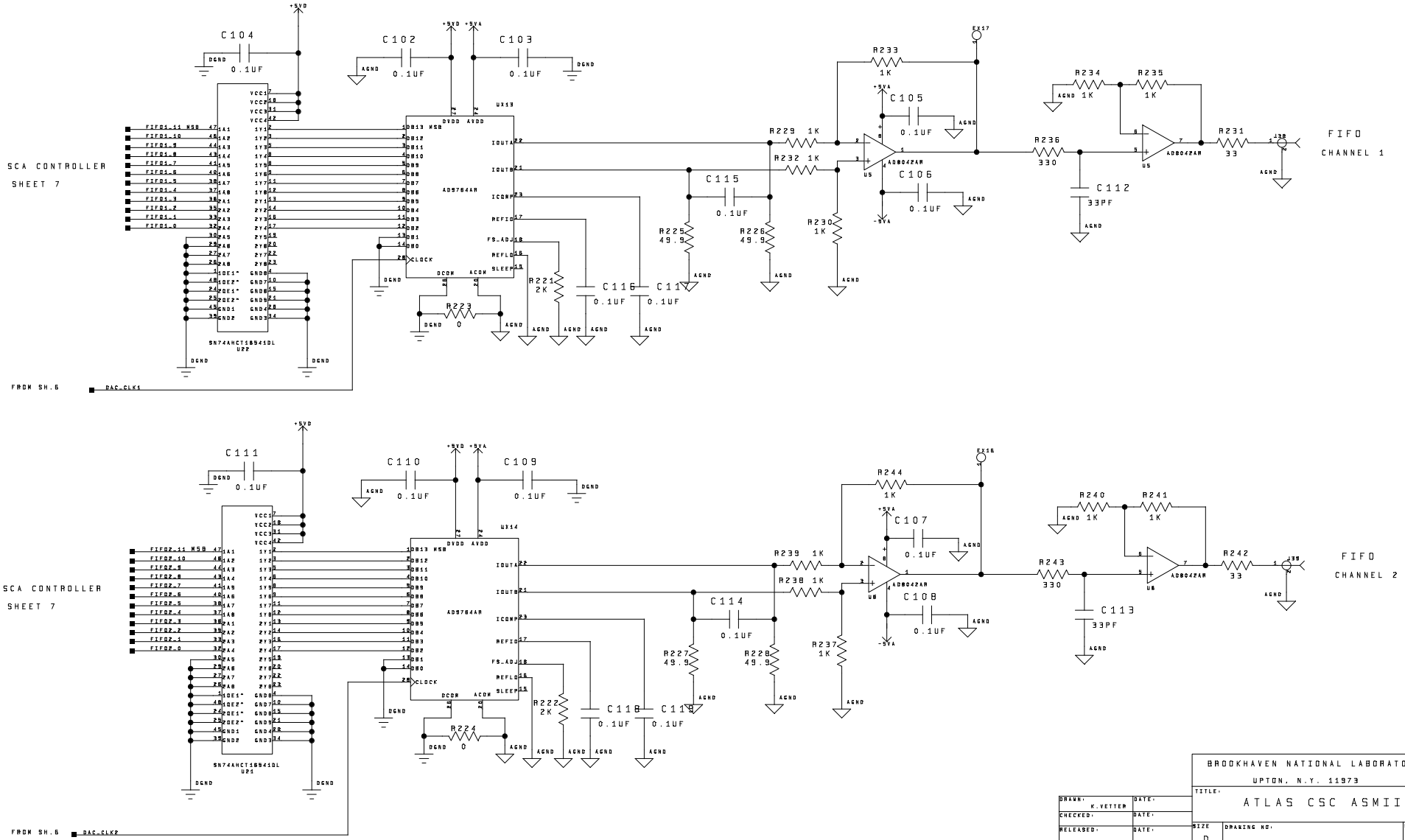

BROOKHAVEN NATIONAL LABORATORY
UPTON, N.Y. 11973

DRAWN: K.VETTER	DATE:	TITLE: ATLAS CSC ASMIIa
CHECKED:	DATE:	
RELEASED:	DATE:	SIZE: D — DRAWING NO: — REV: 1
		SCALE: — SHEET: 9 OF 14

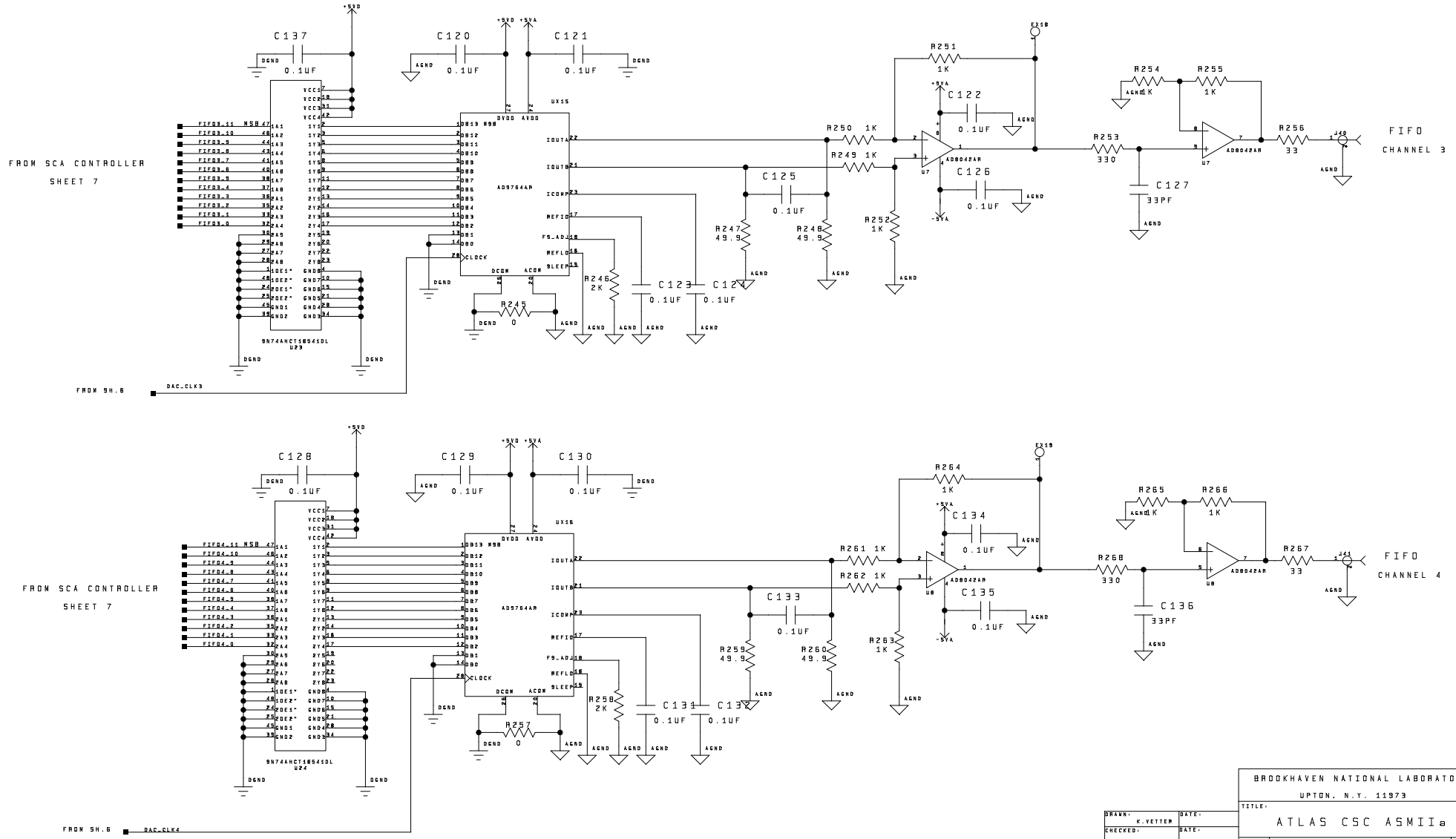

DRAWN: K.VETTER	DATE:	BROOKHAVEN NATIONAL LABORATORY UPTON, N.Y. 11973
CHECKED:	DATE:	TITLE: ATLAS CSC ASMIIa
RELEASED:	DATE:	SIZE: D · DRAWING NO: · REV: 1
		SCALE: · SHEET: 10 OF 14

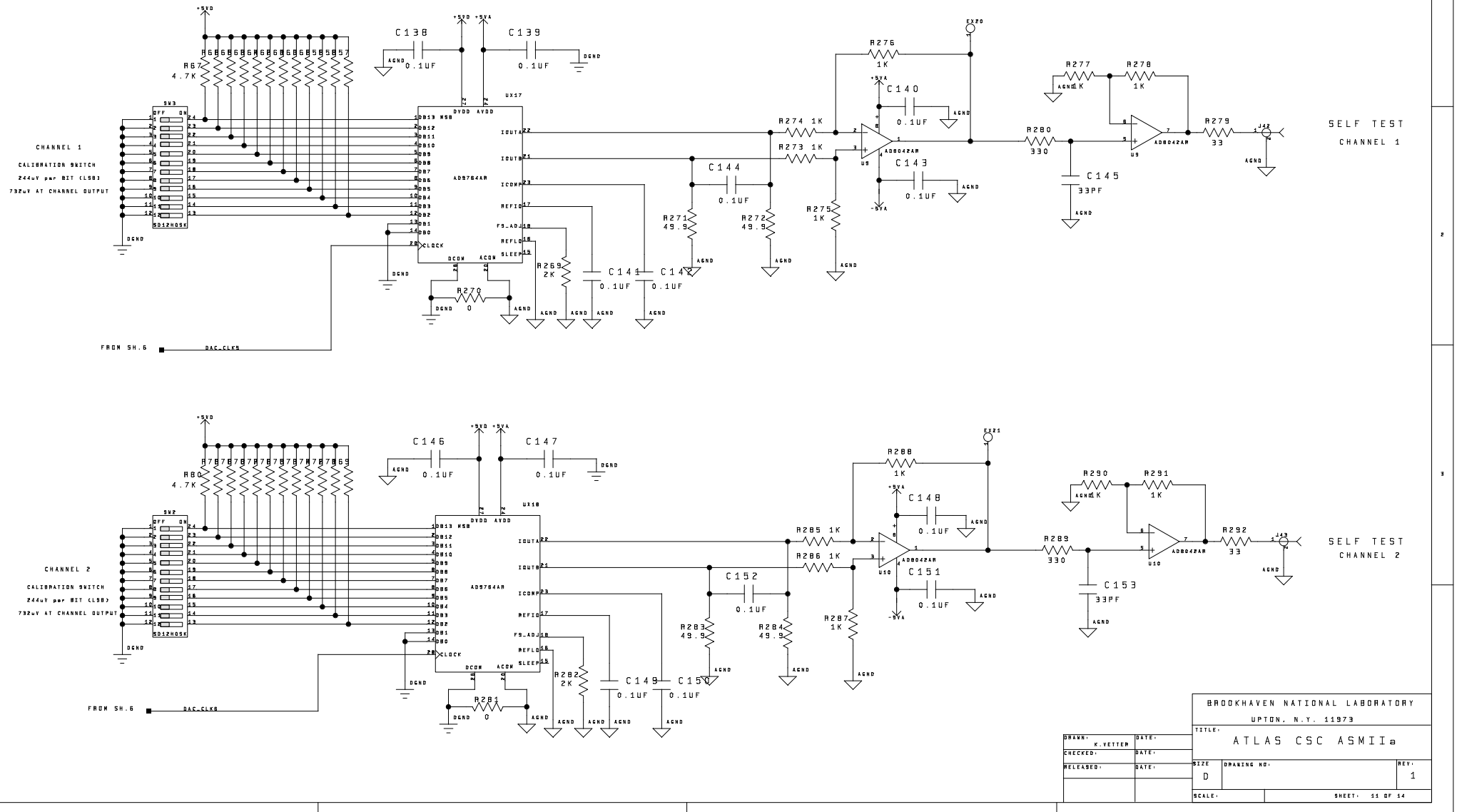
CHANNEL 1
CALIBRATION SWITCH
244uV per BIT (LSB)
732uV AT CHANNEL OUTPUT
SW3
SD12H05K
R67
4.7K
C138
0.1UF
C139
0.1UF
U17
AD9764AR
DB13 MSB
DB12
DB11
DB10
DB9
DB8
DB7
DB6
DB5
DB4
DB3
DB2
DB1
DB0
IOUTA
IOUTB
ICOMP
REFIO
FS_ADJ
REFLO
SLEEP
CLOCK
DCOM
ACOM
DVDD
AVDD
R269
2K
C141
0.1UF
C142
0.1UF
R270
0
R271
49.9
R272
49.9
C144
0.1UF
R274 1K
R273 1K
R276
1K
C140
0.1UF
C143
0.1UF
R275
1K
R280
330
C145
33PF
R277
1K
R278
1K
R279
33
SELF TEST
CHANNEL 1
FROM SH.6
DAC_CLK6
CHANNEL 2
CALIBRATION SWITCH
244uV per BIT (LSB)
732uV AT CHANNEL OUTPUT
SW2
SD12H05K
R80
4.7K
C146
0.1UF
C147
0.1UF
U18
AD9764AR
R282
2K
C149
0.1UF
C150
0.1UF
R281
0
R283
49.9
R284
49.9
C152
0.1UF
R285 1K
R286 1K
R288
1K
C148
0.1UF
C151
0.1UF
R287
1K
R289
330
C153
33PF
R290
1K
R291
1K
R292
33
SELF TEST
CHANNEL 2
FROM SH.6
DAC_CLK6
BROOKHAVEN NATIONAL LABORATORY
UPTON, N.Y. 11973
TITLE:
ATLAS CSC ASMIIa
DRAWN: K.VETTER
DATE:
CHECKED:
DATE:
RELEASED:
DATE:
SIZE D
DRAWING NO:
REV: 1
SCALE:
SHEET: 11 OF 14

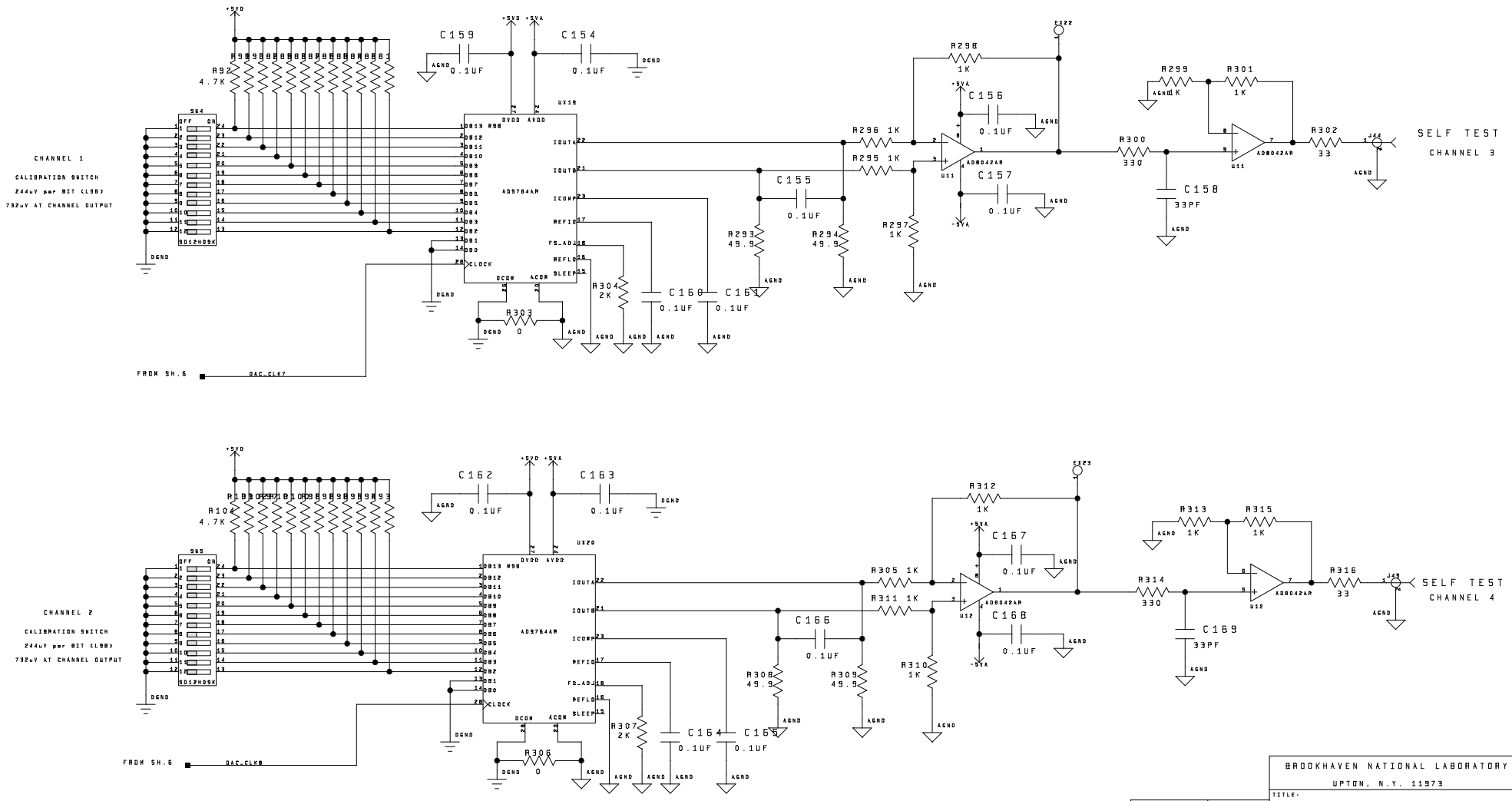

BROOKHAVEN NATIONAL LABORATORY
UPTON, N.Y. 11973

TITLE: ATLAS CSC ASMIIa

DRAWN: K.VETTER	DATE:		
CHECKED:	DATE:		
RELEASED:	DATE:		
SIZE D	DRAWING NO:		REV: 1
SCALE:		SHEET: 12 OF 14	

G-LINK TRANSMITTER Plug-In

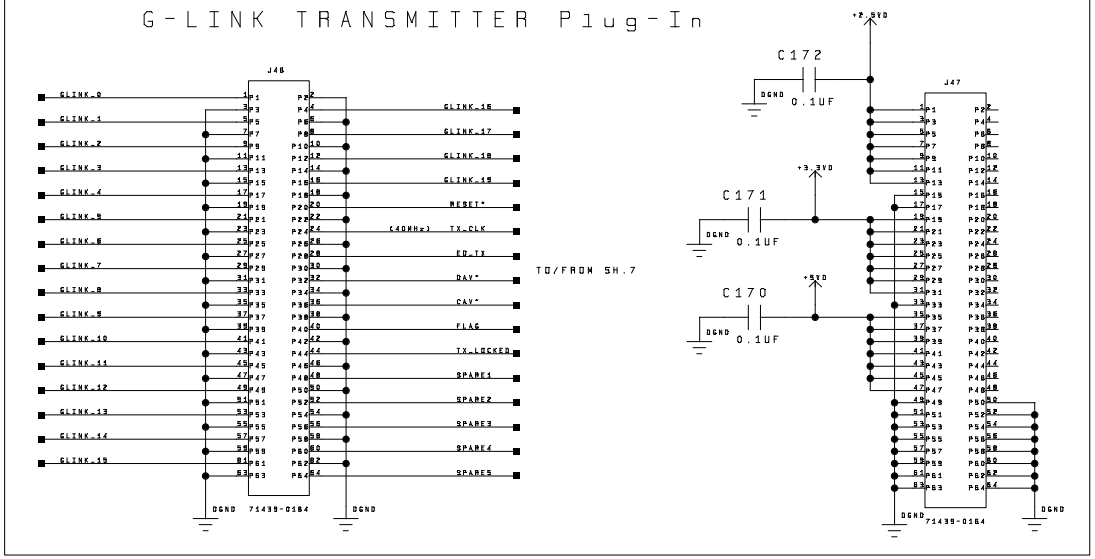

G-LINK RECIEVER Plug-In

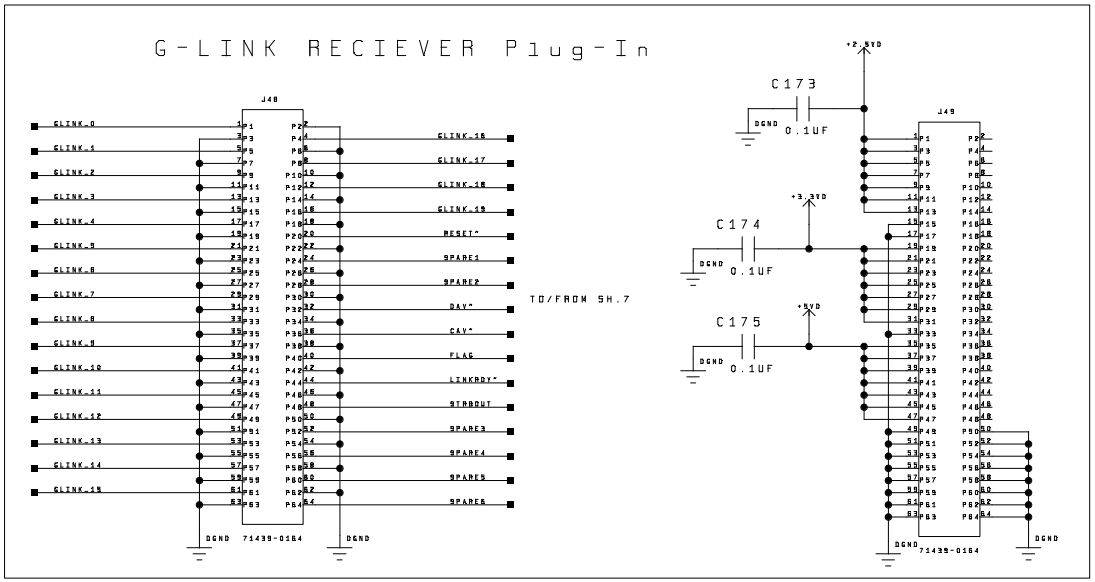

BROOKHAVEN NATIONAL LABORATORY
UPTON, N.Y. 11973

TITLE: ATLAS CSC ASMIIa

DRAWN: K.VETTER	DATE:	
CHECKED:	DATE:	
RELEASED:	DATE:	

SIZE: D | DRAWING NO: | REV: 1

SCALE: | SHEET: 13 OF 14

SPARE PLUG-IN

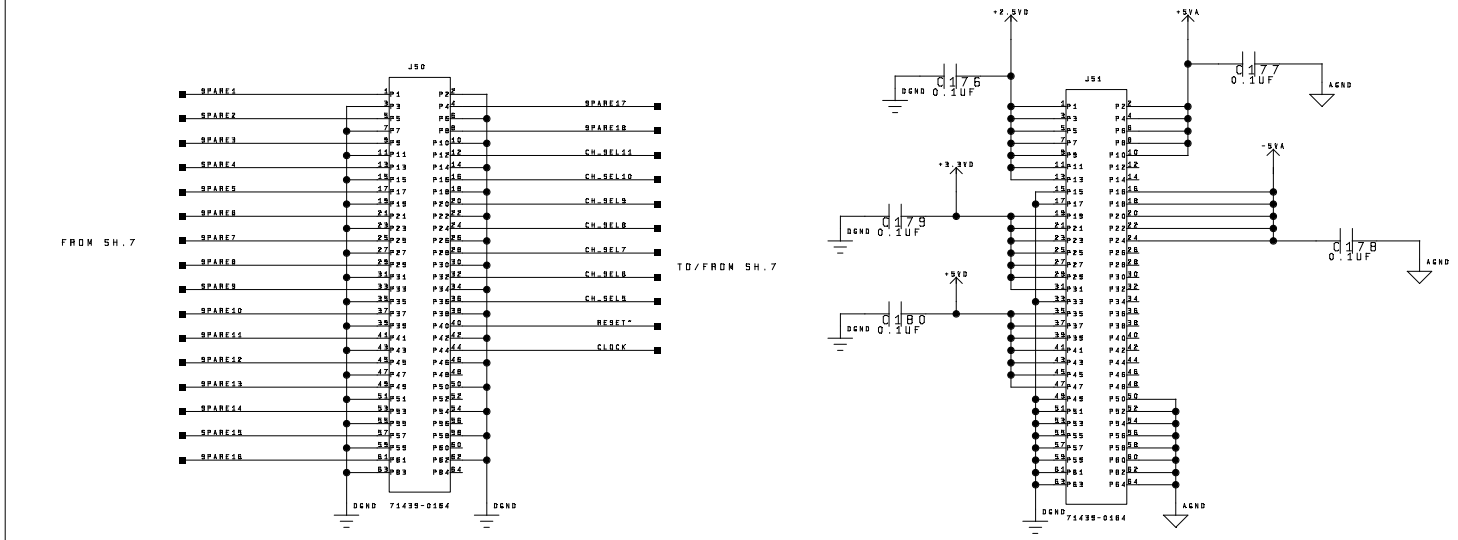

DRAWN: K.VETTER	DATE:	BROOKHAVEN NATIONAL LABORATORY UPTON, N.Y. 11973
CHECKED:	DATE:	TITLE: ATLAS CSC ASMIIa
RELEASED:	DATE:	SIZE: D; DRAWING NO.; REV: 1
		SCALE: ; SHEET: 14 OF 14