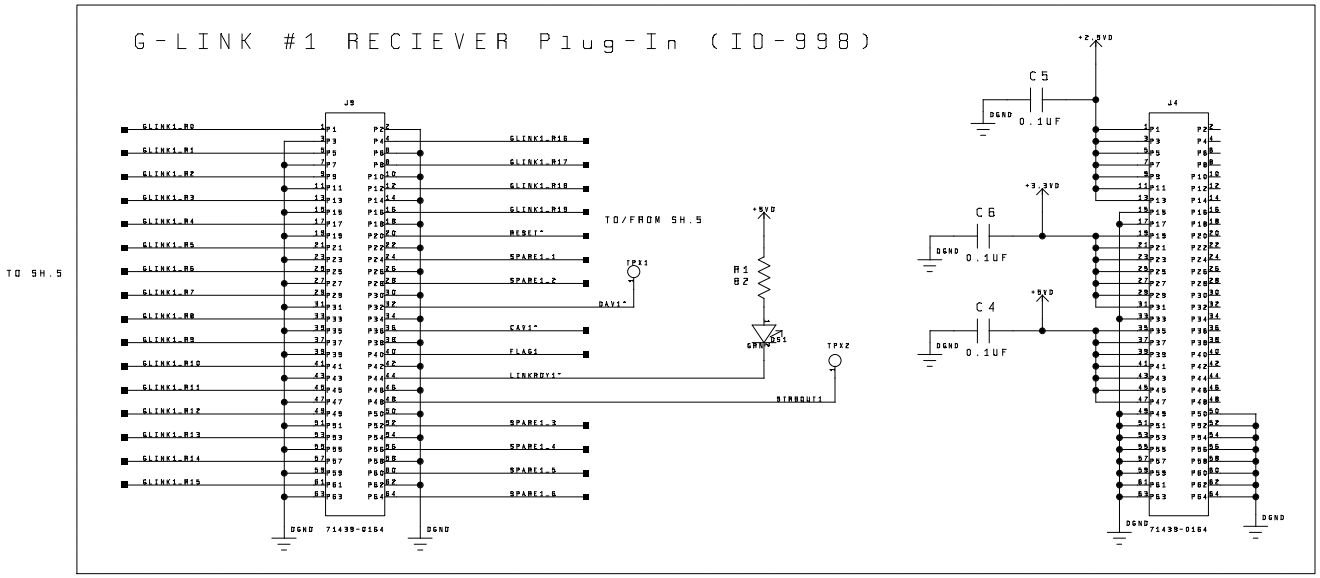

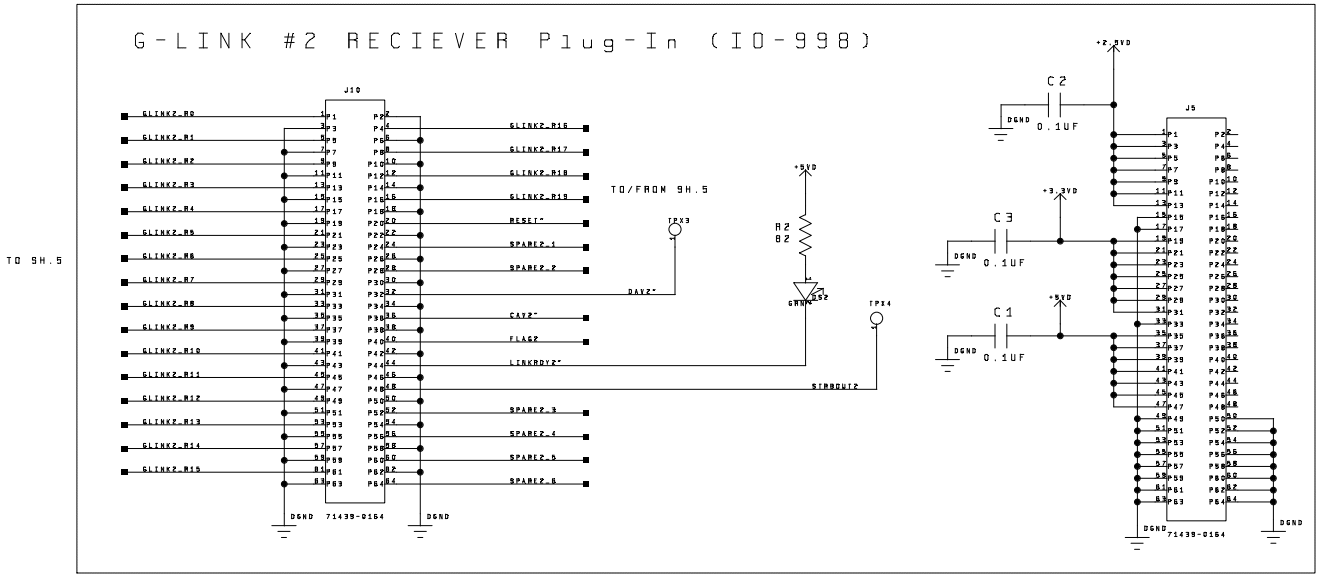

DRAWN: K.VETTER	DATE: 6-27-2000	BROOKHAVEN NATIONAL LABORATORY UPTON, N.Y. 11973	
CHECKED:	DATE:	TITLE: ASMIIa VME DAQ	
RELEASED:	DATE:	SIZE D	DRAWING NO: IO-1016-1	REV: 1
		SCALE:	SHEET: 1 OF 13

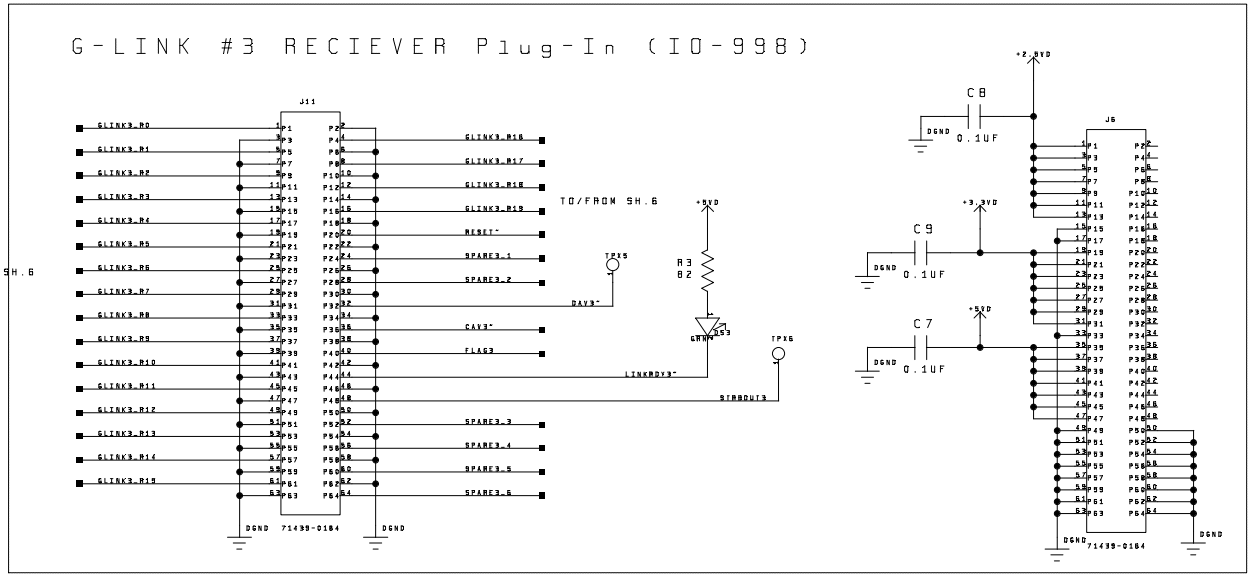

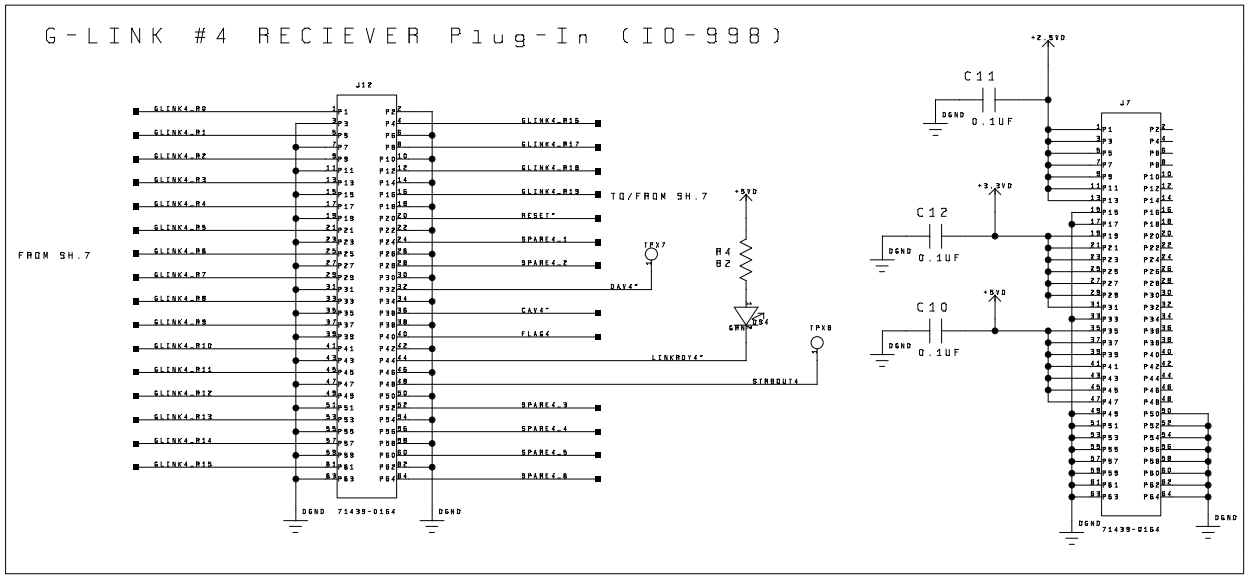

BROOKHAVEN NATIONAL LABORATORY UPTON, N.Y. 11973		
TITLE: ASMIIa VME DAQ		
DRAWN: K.VETTER	DATE: 5-27-2000	
CHECKED:	DATE:	
RELEASED:	DATE:	
SIZE: D	DRAWING NO: IO-1016-1	REV: 1
SCALE:	SHEET: 2 OF 13	

LINK #1 PROCESSING AND STORAGE

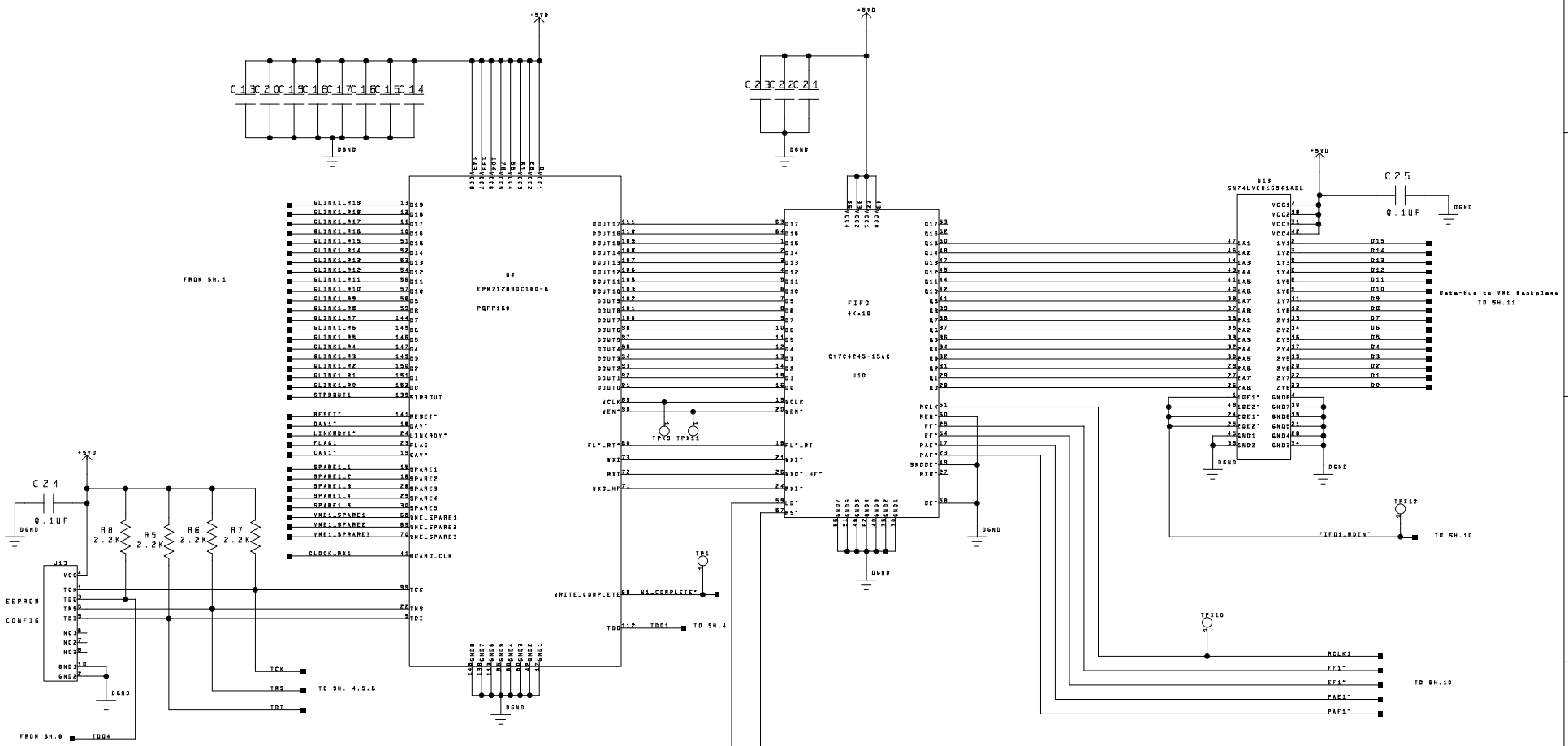

BROOKHAVEN NATIONAL LABORATORY
UPTON, N.Y. 11973

DRAWN: K.VETTER	DATE: 8-27-2000	TITLE: ASMIIa VME DAQ
CHECKED:	DATE:	
RELEASED:	DATE:	
SIZE D	DRAWING NO: IO-1016-1	REV: 1
SCALE:	SHEET: 3 OF 13	

LINK #2 PROCESSING AND STORAGE

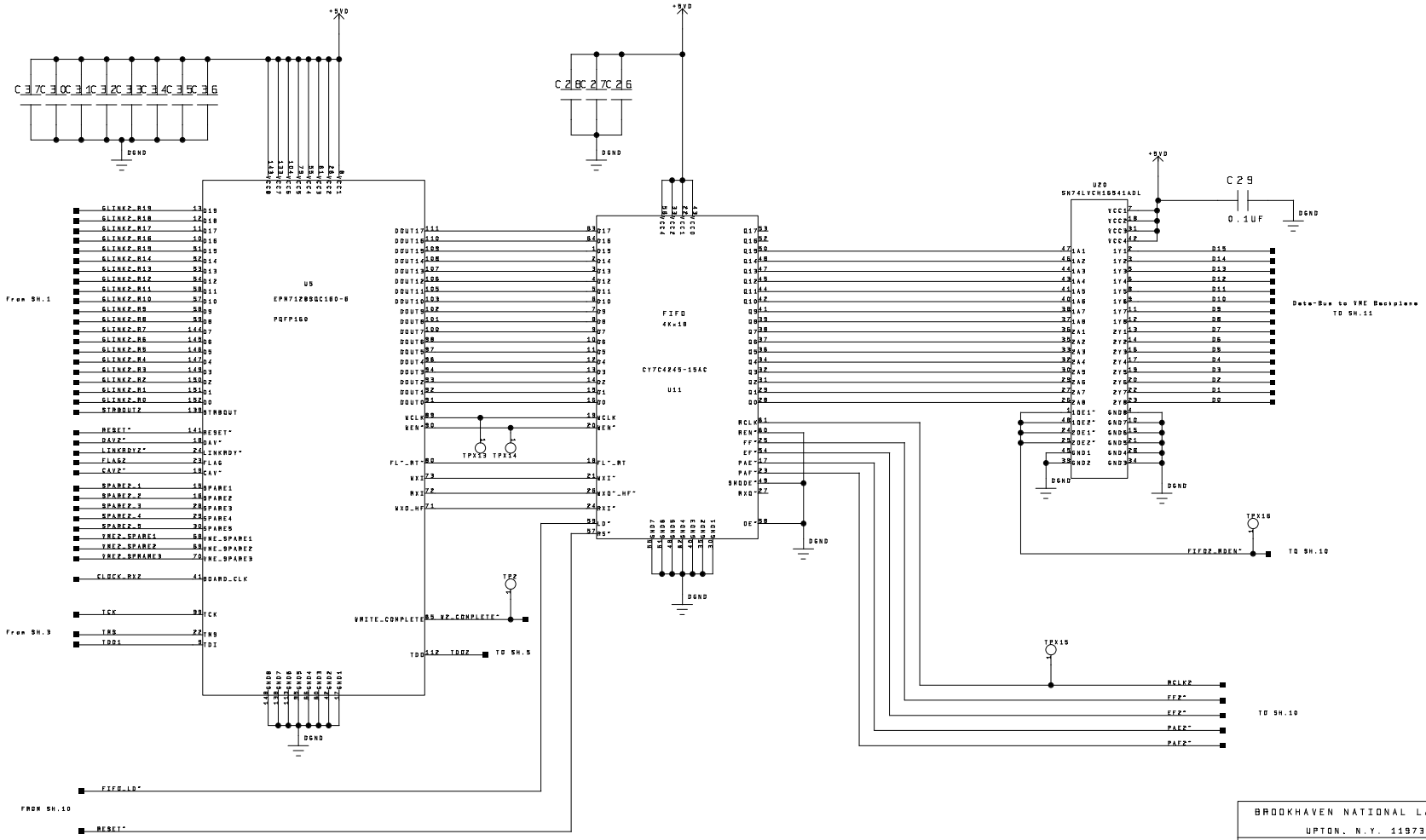

DRAWN: K.VETTER	DATE: 6-27-2000
CHECKED:	DATE:
RELEASED:	DATE:

BROOKHAVEN NATIONAL LABORATORY
UPTON, N.Y. 11973

TITLE: ASMIIa VME DAQ

SIZE	DRAWING NO:	REV:
D	IO-1016-1	1

SCALE: SHEET: 4 OF 13

LINK #3 PROCESSING AND STORAGE

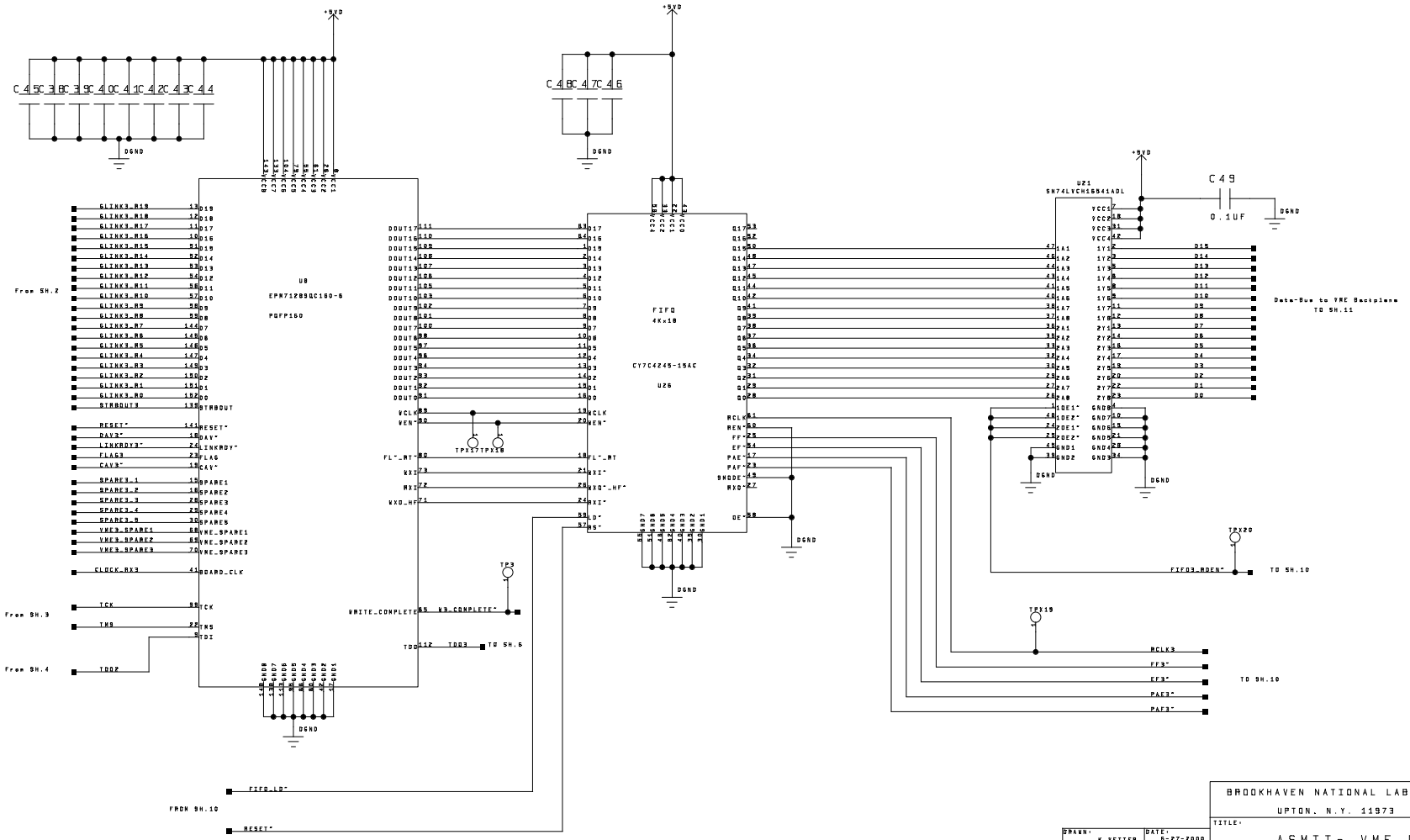

BROOKHAVEN NATIONAL LABORATORY UPTON, N.Y. 11973			
DRAWN: K.VETTER	DATE: 6-27-2000	TITLE: ASMIIa VME DAQ	
CHECKED:	DATE:		
RELEASED:	DATE:	SIZE D	DRAWING NO: IO-1016-1	REV: 1
		SCALE:	SHEET: 5 OF 13

LINK #4 PROCESSING AND STORAGE

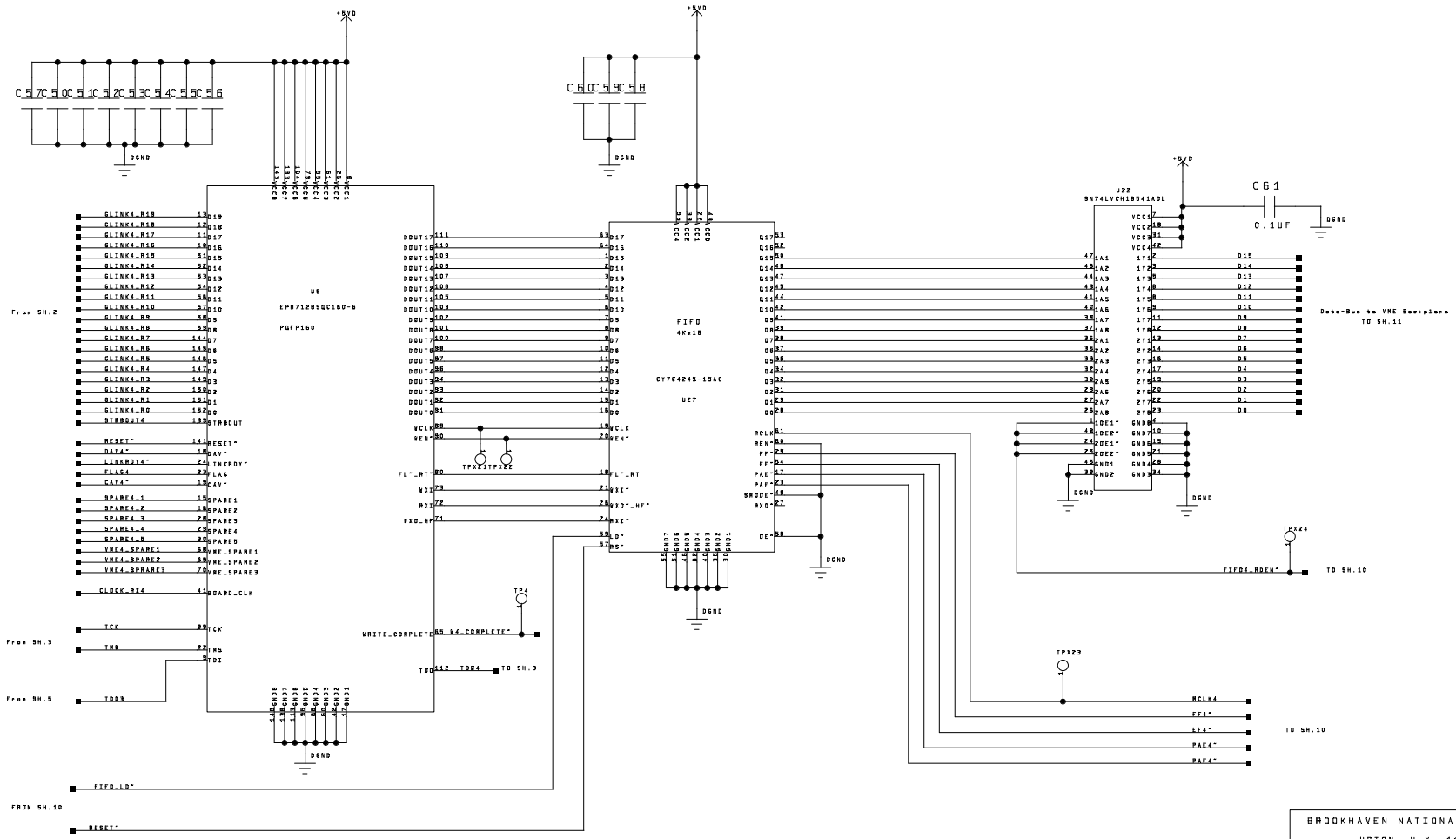

BROOKHAVEN NATIONAL LABORATORY UPTON, N.Y. 11973			
DRAWN: K.VETTER	DATE: 5-27-2000	TITLE: ASMIIa VME DAQ	
CHECKED:	DATE:		
RELEASED:	DATE:	SIZE D	DRAWING NO: IO-1016-1 REV: 1
		SCALE:	SHEET: 6 OF 13

G-LINK TRANSMITTER Plug-In (IO-997)

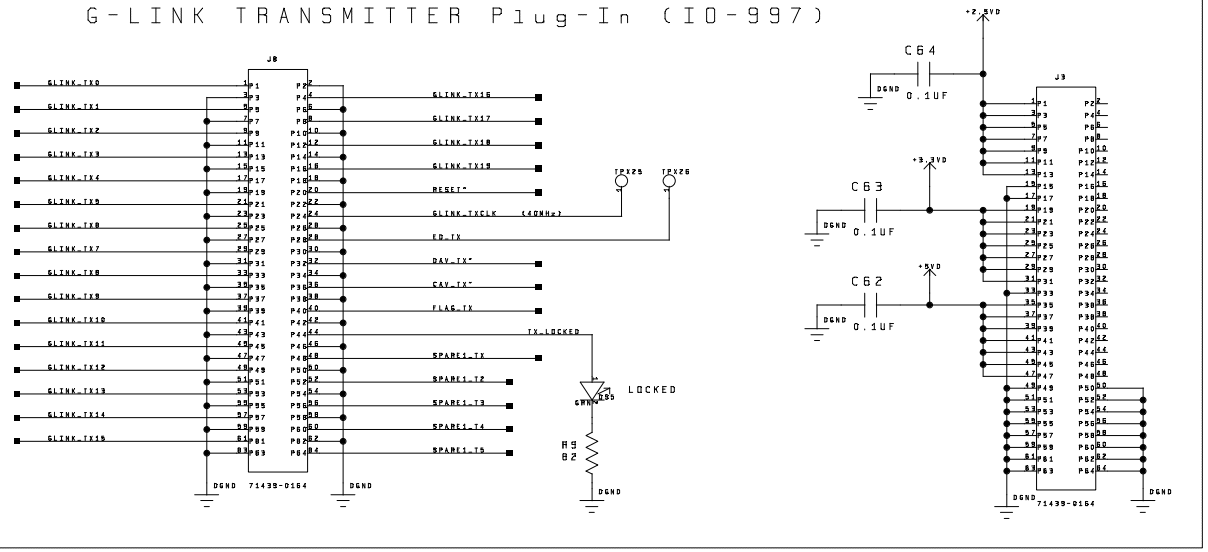

DRAWN: K.VETTER	DATE: 6-27-2000	BROOKHAVEN NATIONAL LABORATORY UPTON, N.Y. 11973
CHECKED:	DATE:	TITLE: ASMIIa VME DAQ
RELEASED:	DATE:	SIZE D · DRAWING NO: IO-1016-1 · REV: 1
		SCALE: · SHEET: 7 OF 13

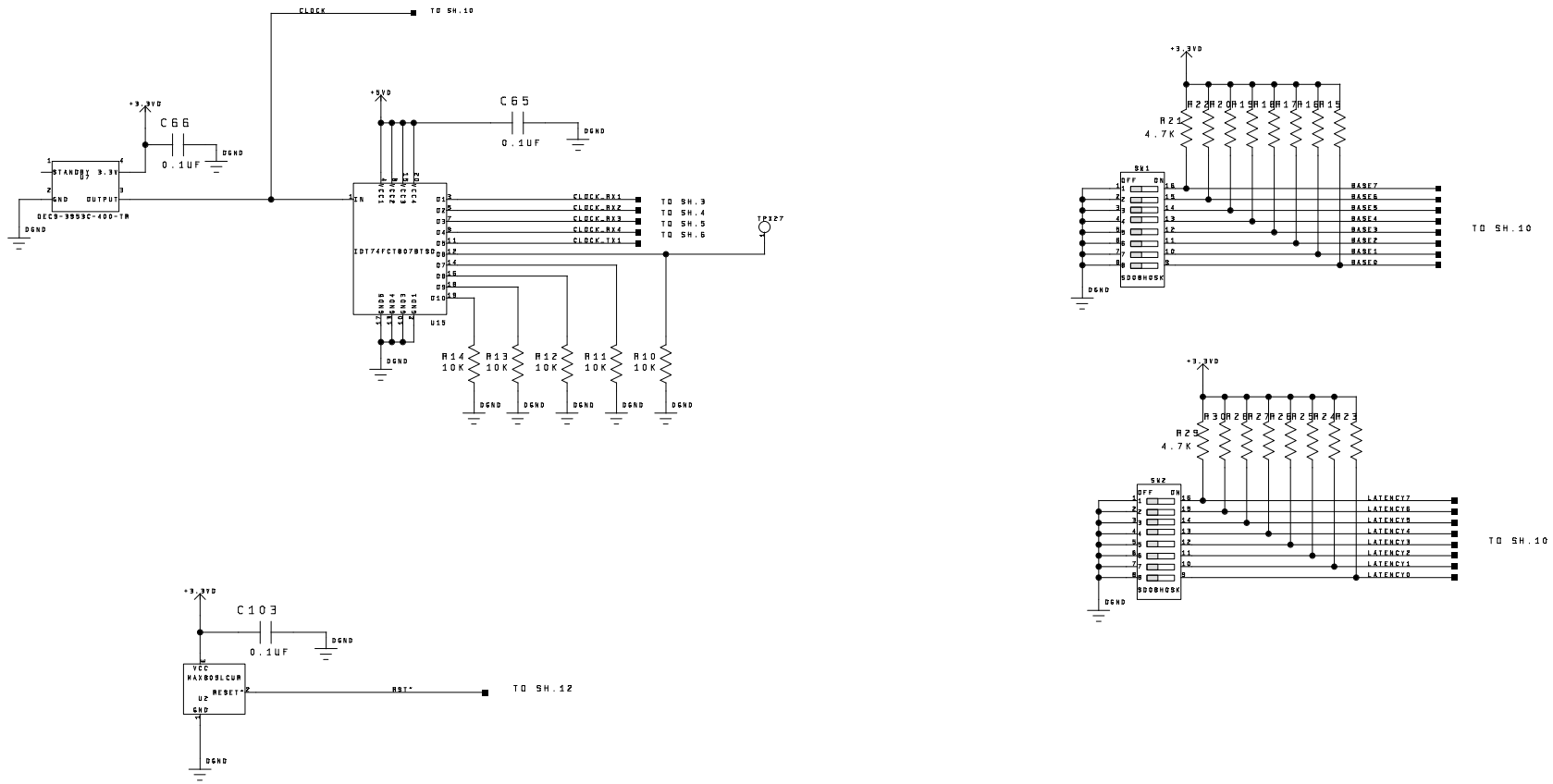

DRAWN: K.VETTER	DATE: 6-27-2000
CHECKED:	DATE:
RELEASED:	DATE:

BROOKHAVEN NATIONAL LABORATORY
UPTON, N.Y. 11973

TITLE: ASMIIa VME DAQ

SIZE	DRAWING NO:	REV:
D	IO-1016-1	1

SCALE: SHEET: 8 OF 13

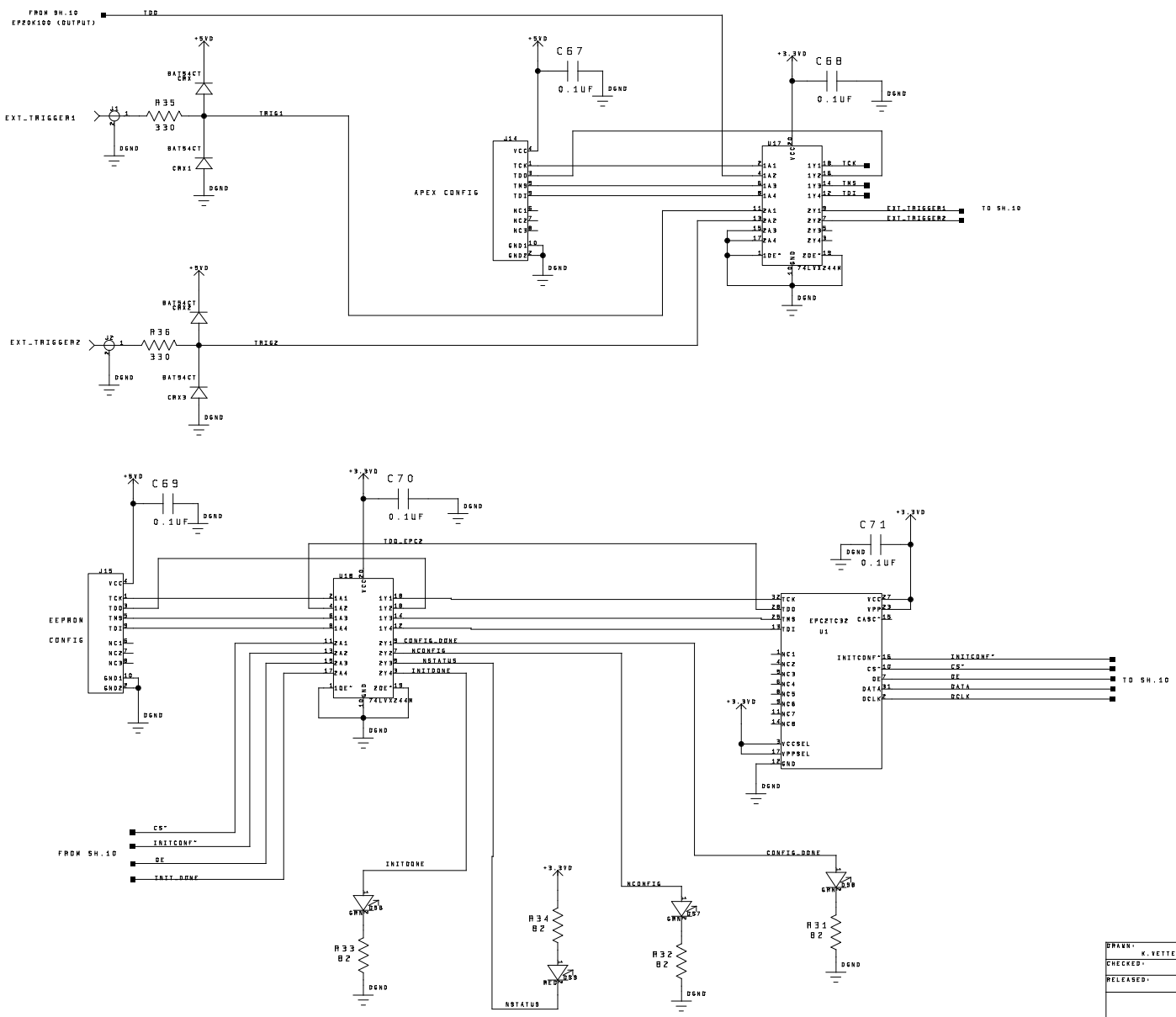

BROOKHAVEN NATIONAL LABORATORY
UPTON, N.Y. 11973

DRAWN: K.VETTER	DATE: 6-27-2000	TITLE: ASMIIa VME DAQ
CHECKED:	DATE:	
RELEASED:	DATE:	
SIZE: D	DRAWING NO: IO-1016-1	REV: 1
SCALE:	SHEET: 9 OF 13	

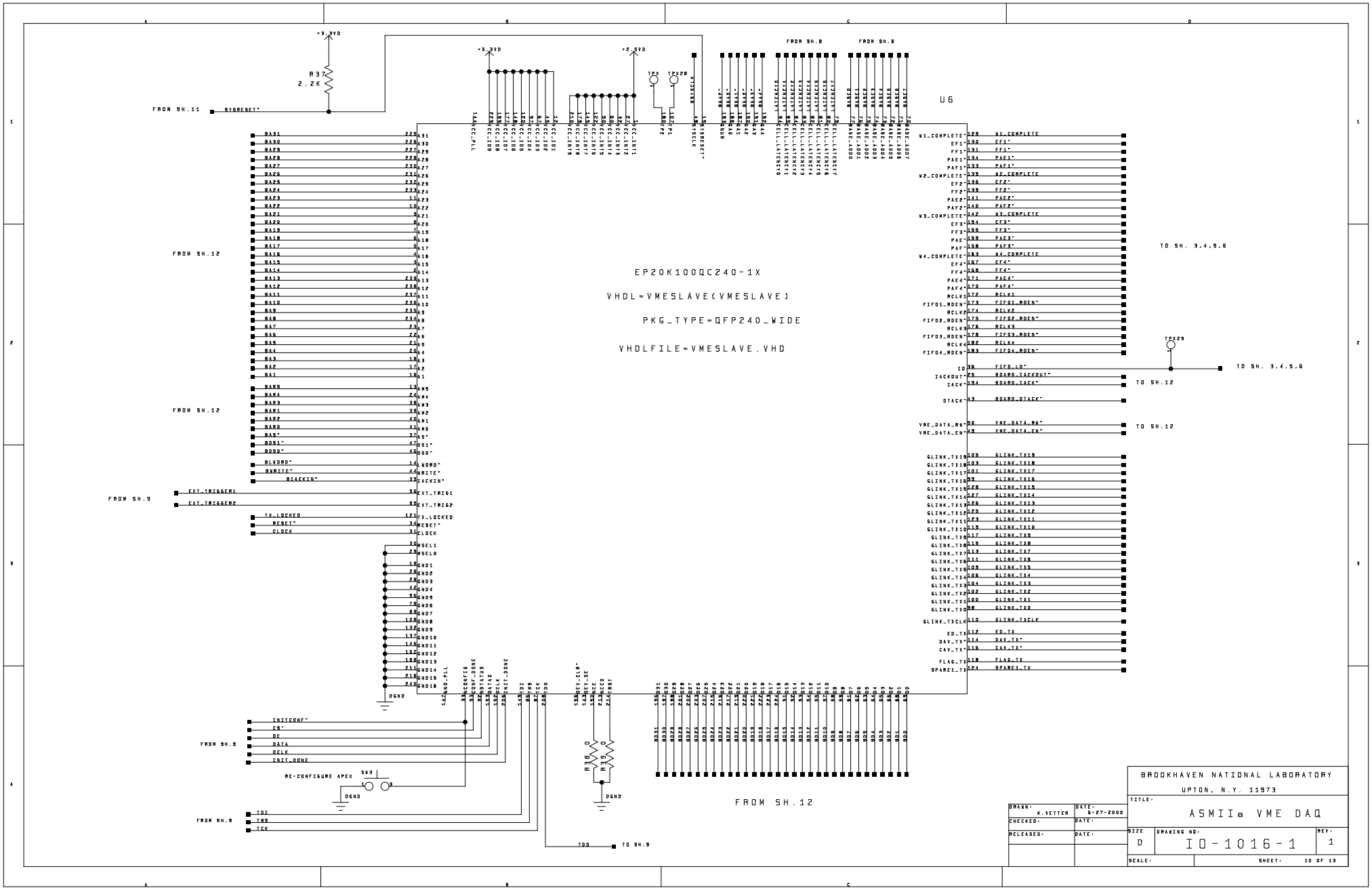
U6
EP20K100QC240-1X
VHDL=VMESLAVE(VMESLAVE)
PKG_TYPE=QFP240_WIDE
VHDLFILE=VMESLAVE.VHD
FROM SH.11
FROM SH.12
FROM SH.9
FROM SH.8
TO SH. 3.4.5.6
TO SH.12
TO SH.9
RE-CONFIGURE APEX
BROOKHAVEN NATIONAL LABORATORY
UPTON, N.Y. 11973
TITLE:
ASMIIa VME DAQ
DRAWN: K.VETTER
DATE: 5-27-2000
CHECKED:
RELEASED:
SIZE D
DRAWING NO: IO-1016-1
REV: 1
SCALE:
SHEET: 10 OF 13

VME BACKPLANE P1,P2 CONNECTORS

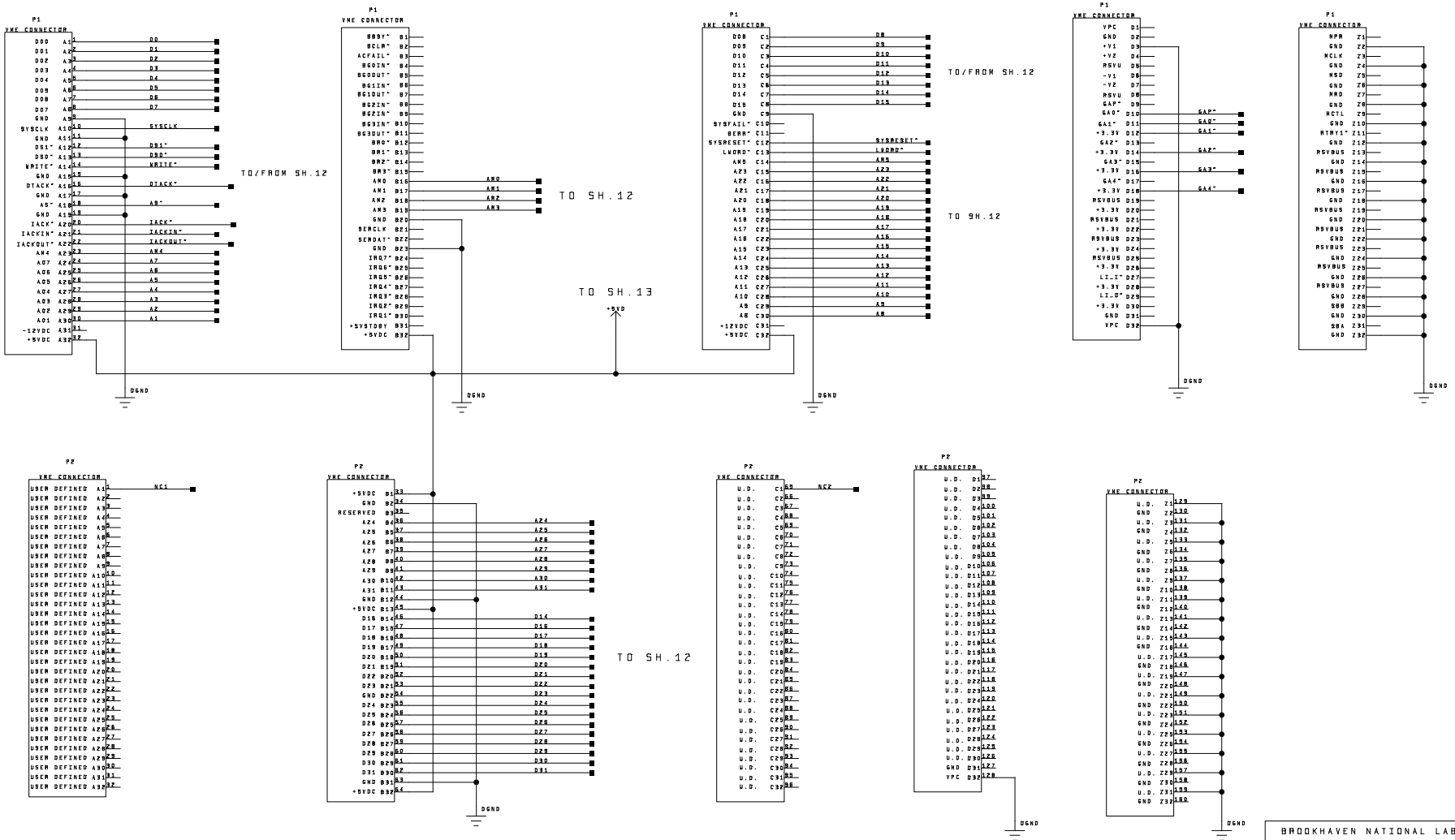

BROOKHAVEN NATIONAL LABORATORY
UPTON, N.Y. 11973

DRAWN: 6-27-2000 K.VETTER	DATE:	TITLE: ASMIIa VME DAQ
CHECKED:	DATE:	
RELEASED:	DATE:	
SIZE: D	DRAWING NO: IO-1016-1	REV: 1
SCALE:	SHEET: 11 OF 13	

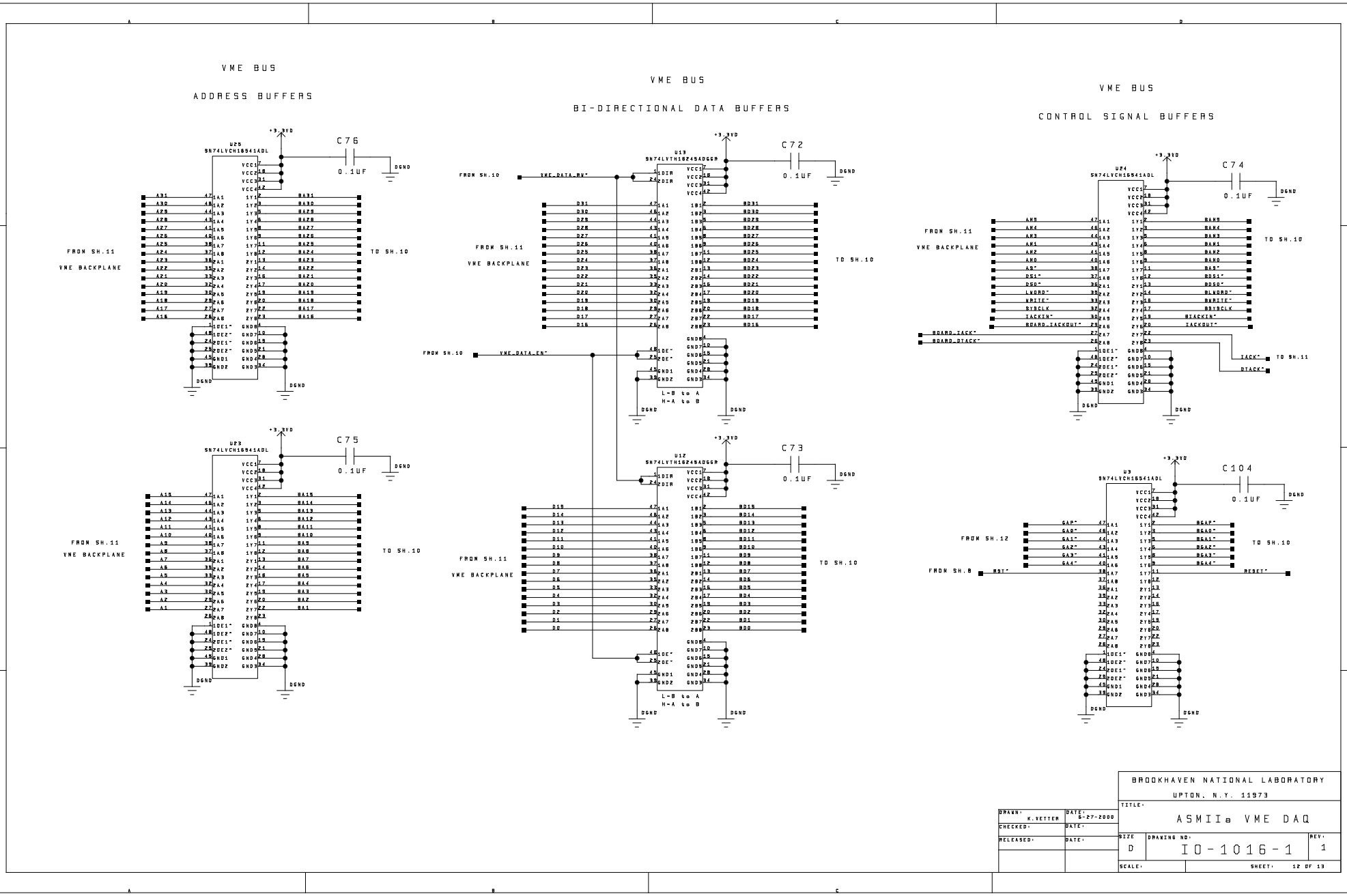

BROOKHAVEN NATIONAL LABORATORY
UPTON, N.Y. 11973

DRAWN: K.VETTER	DATE: 5-27-2000	TITLE: ASMIIa VME DAQ
CHECKED:	DATE:	
RELEASED:	DATE:	
SIZE D	DRAWING NO: IO-1016-1	REV: 1
SCALE:	SHEET: 12 OF 13	

DIGITAL REGULATORS

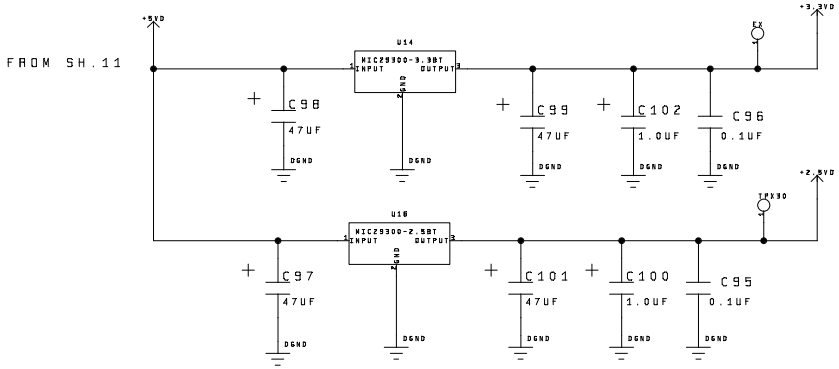

Bypass caps for Altera Apex EP20K100 (PG.10)

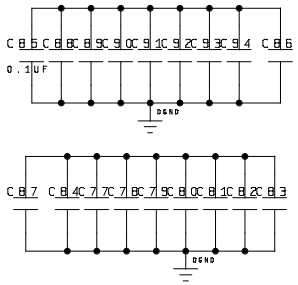

BROOKHAVEN NATIONAL LABORATORY	
UPTON, N.Y. 11973	
TITLE: ASMIIa VME DAQ	
SIZE: D	DRAWING NO: IO-1016-1
REV: 1	
SCALE:	SHEET: 13 OF 13
DRAWN: K.VETTER	DATE: 5-27-2000
CHECKED:	DATE:
RELEASED:	DATE: