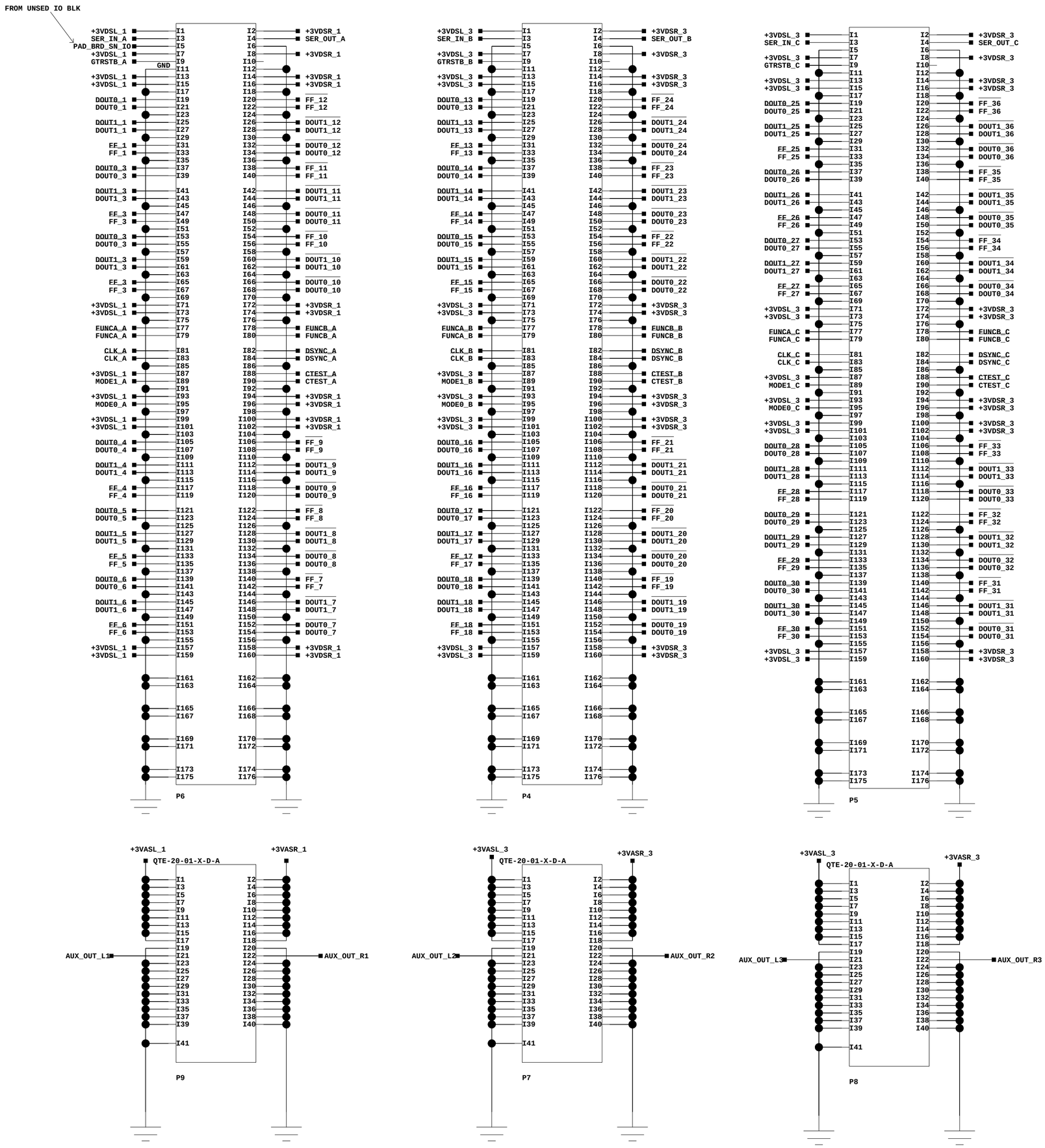

DECOUPLING CAPS

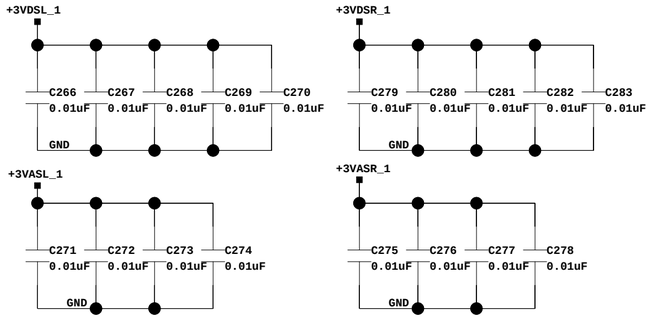

DECOUPLING CAPS

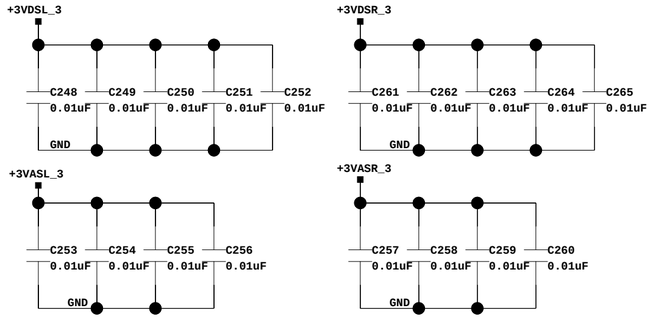

DECOUPLING CAPS

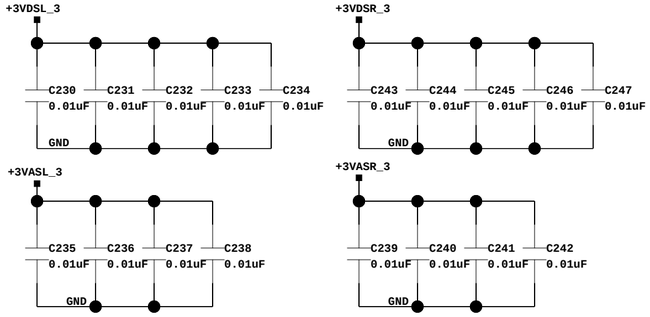

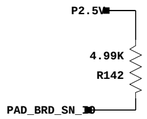

BROOKHAVEN NATIONAL LABORATORY
INSTRUMENTATION DIVISION
BLDG. 535B
UPTON N.Y. 11973

IMP ASIC PAD DETECTOR IO

Date: 17/04/2015:11:28

DRAWN BY: Jack Fried

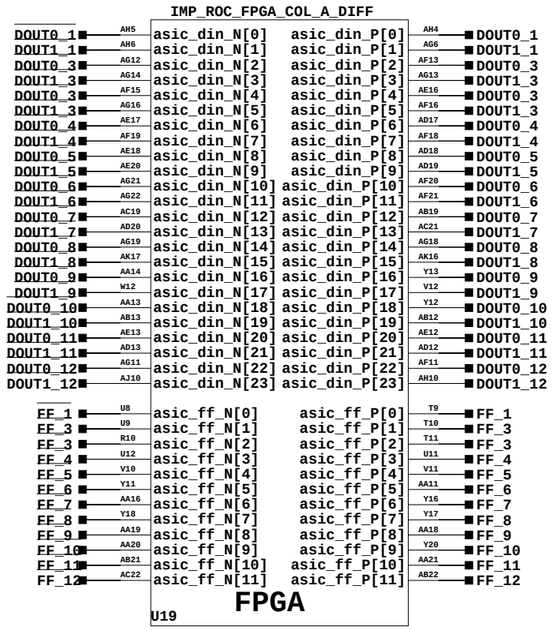

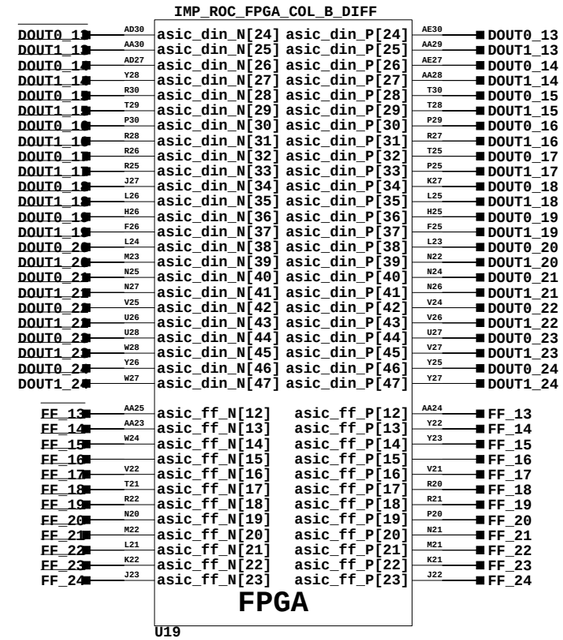

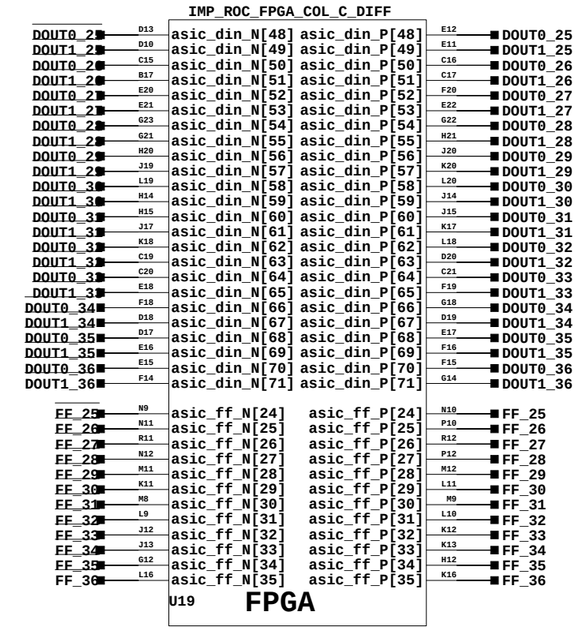

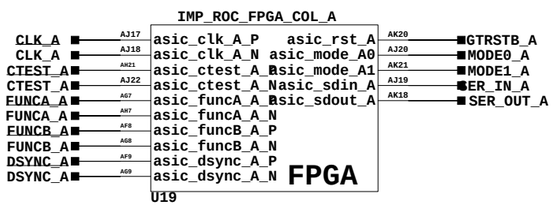

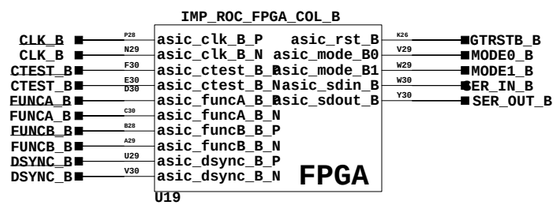

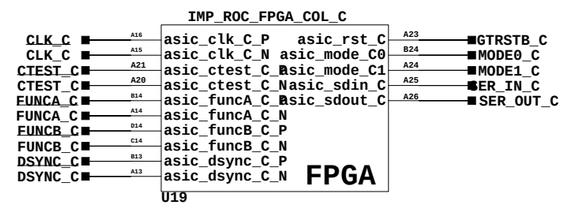

BROOKHAVEN NATIONAL LABORATORY
INSTRUMENTATION DIVISION
BLDG. 535B
UPTON N.Y. 11973

IMP ASIC PAD DETECTOR FPGA IO

Date: 25/03/2015:20:41

DRAWN BY: Jack Fried

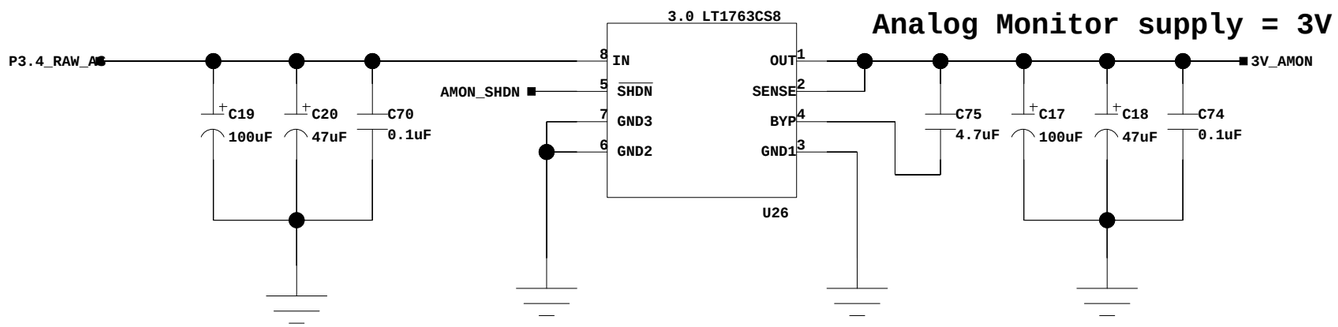

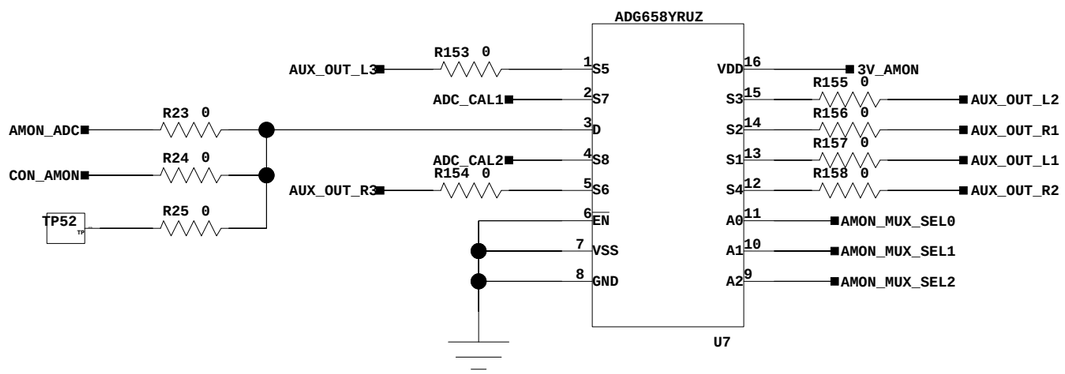

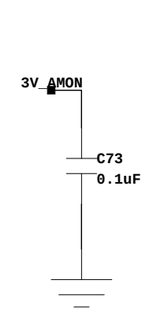

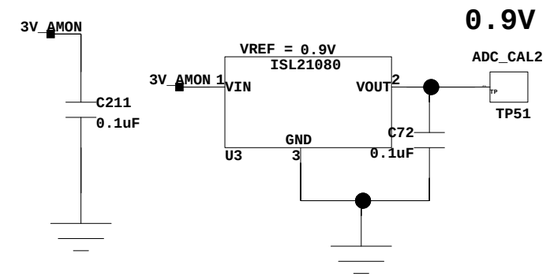

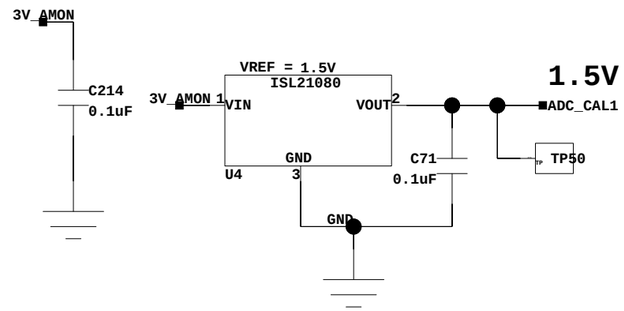

BROOKHAVEN NATIONAL LABORATORY
INSTRUMENTATION DIVISION
BLDG. 535B
UPTON N.Y. 11973

ANALOG MONITOR

Date: 15/04/2015:15:37

DRAWN BY: Jack Fried

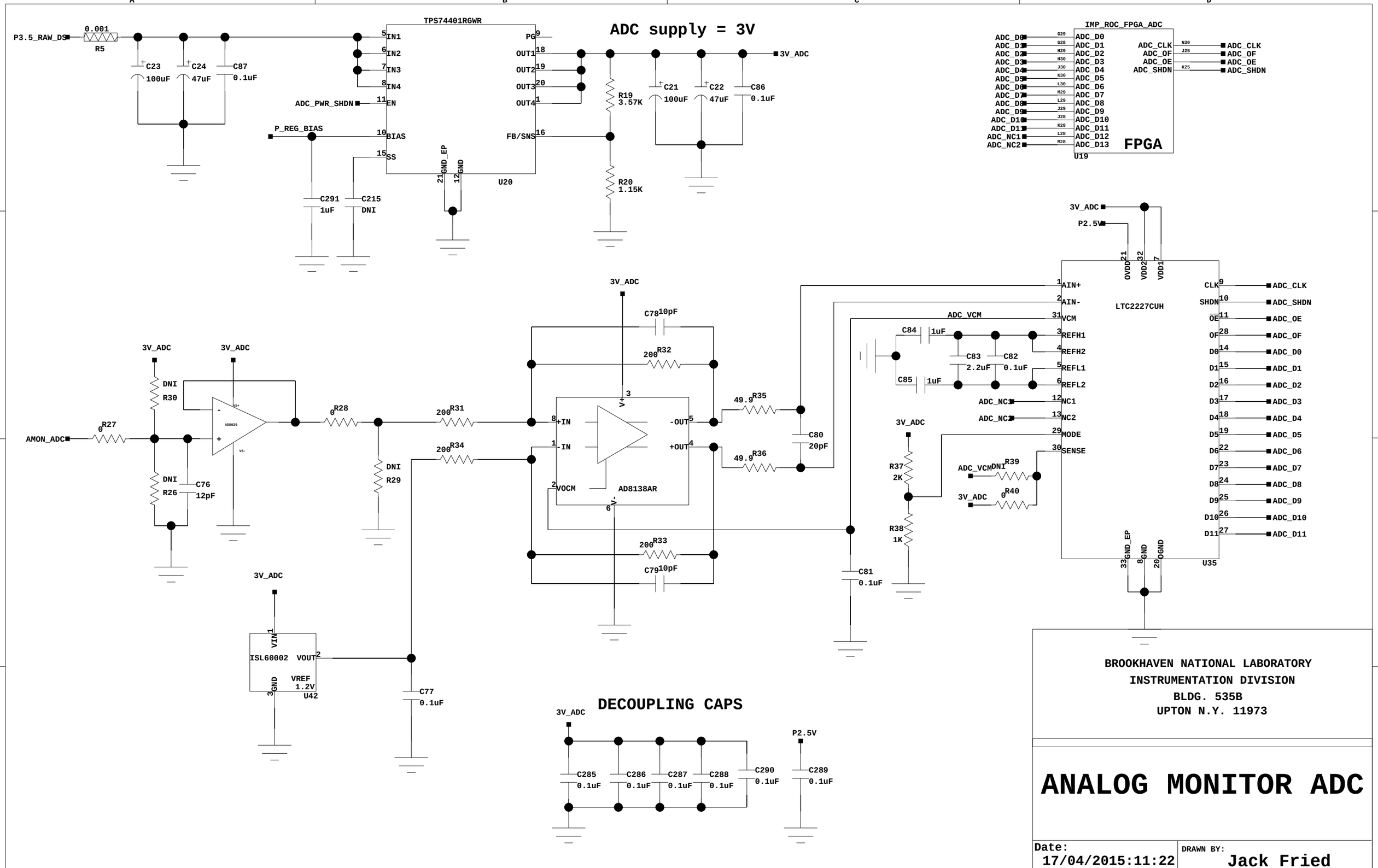
ADC supply = 3V
TPS74401RGWR
P3.5_RAW_DS
0.001
R5
C23
100uF
C24
47uF
C87
0.1uF
IN1
IN2
IN3
IN4
EN
BIAS
SS
PG
OUT1
OUT2
OUT3
OUT4
FB/SNS
GND_EP
GND
U20
ADC_PWR_SHDN
P_REG_BIAS
C291
1uF
C215
DNI
R19
3.57K
R20
1.15K
C21
100uF
C22
47uF
C86
0.1uF
3V_ADC
IMP_ROC_FPGA_ADC
ADC_D0
ADC_D1
ADC_D2
ADC_D3
ADC_D4
ADC_D5
ADC_D6
ADC_D7
ADC_D8
ADC_D9
ADC_D10
ADC_D11
ADC_D12
ADC_D13
ADC_NC1
ADC_NC2
ADC_CLK
ADC_OF
ADC_OE
ADC_SHDN
FPGA
U19
P2.5V
OVDD
VDD2
VDD1
LTC2227CUH
AIN+
AIN-
VCM
REFH1
REFH2
REFL1
REFL2
NC1
NC2
MODE
SENSE
CLK
SHDN
OE
OF
D0
D1
D2
D3
D4
D5
D6
D7
D8
D9
D10
D11
U35
C84
1uF
C85
1uF
C83
2.2uF
C82
0.1uF
R37
2K
R38
1K
R39
R40
AMON_ADC
R27
0
DNI
R30
R26
C76
12pF
R28
R29
R31
200
R34
C78
10pF
R32
R33
C79
10pF
+IN
-IN
VOCM
-OUT
+OUT
AD8138AR
R35
49.9
R36
C80
20pF
C81
0.1uF
ISL60002
VIN
VOUT
VREF
1.2V
U42
C77
0.1uF
DECOUPLING CAPS
C285
C286
C287
C288
C290
C289
0.1uF
BROOKHAVEN NATIONAL LABORATORY
INSTRUMENTATION DIVISION
BLDG. 535B
UPTON N.Y. 11973
ANALOG MONITOR ADC
Date:
17/04/2015:11:22
DRAWN BY:
Jack Fried

IO GOING TO FLANGE

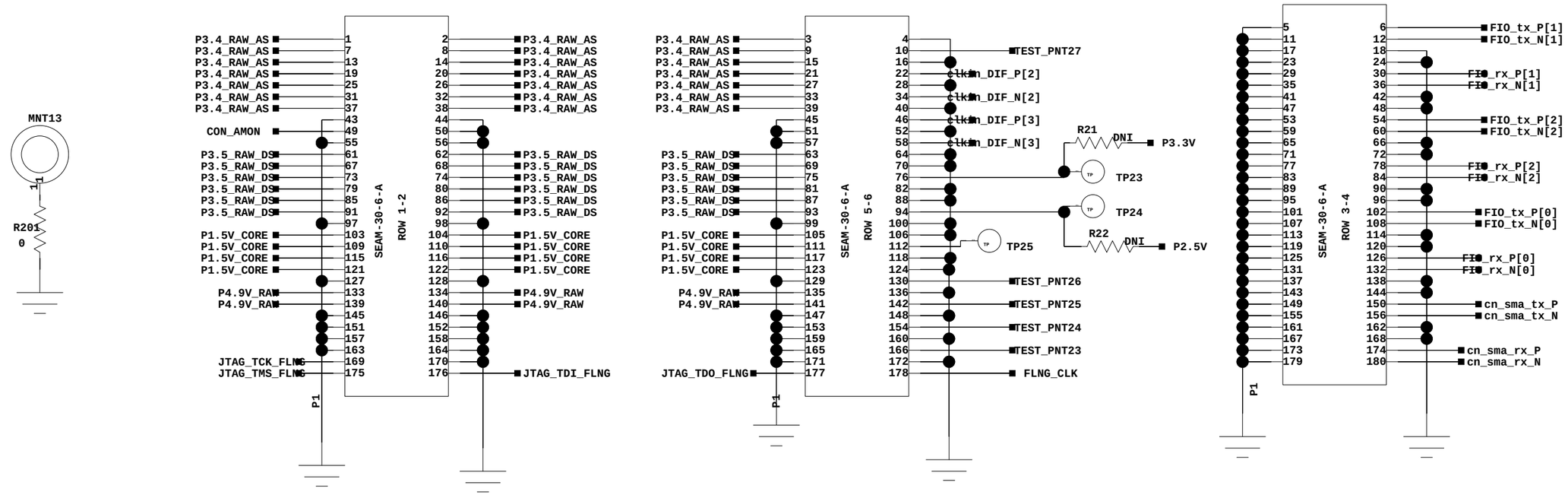

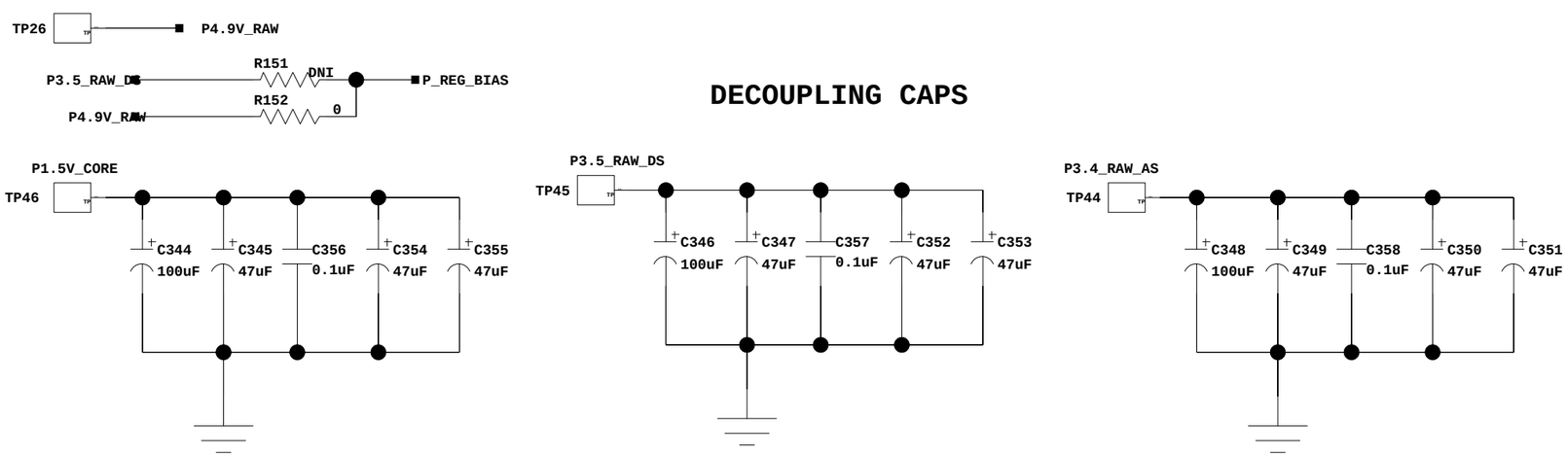

BROOKHAVEN NATIONAL LABORATORY
INSTRUMENTATION DIVISION
BLDG. 535B
UPTON N.Y. 11973

IMP ROC FLANGE IO

Date: 01/05/2015:13:54

DRAWN BY: Jack Fried

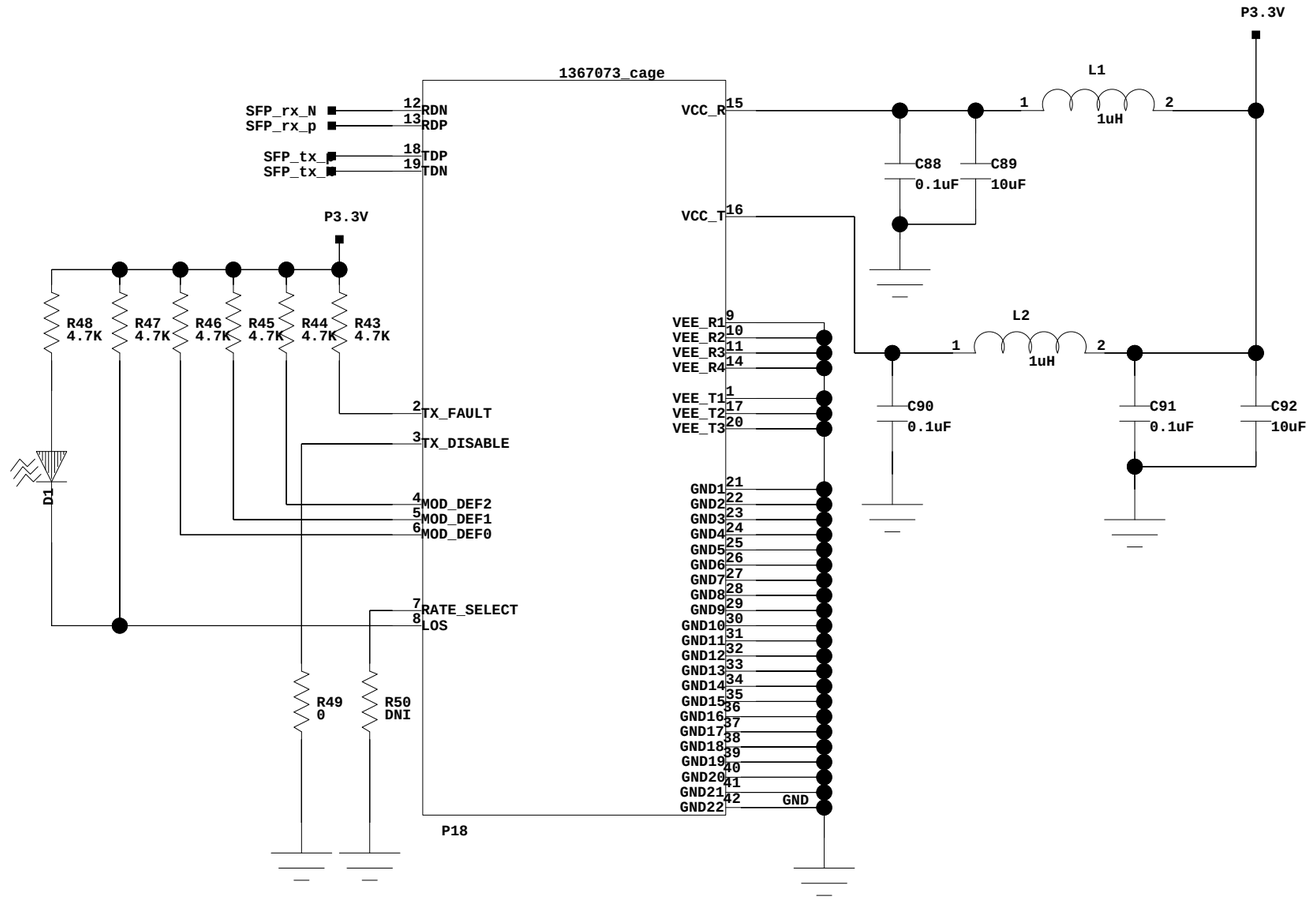

BROOKHAVEN NATIONAL LABORATORY
INSTRUMENTATION DIVISION
BLDG. 535B
UPTON N.Y. 11973

IMP ROC SFP

Date: 24/09/2014:12:01

DRAWN BY: Jack Fried

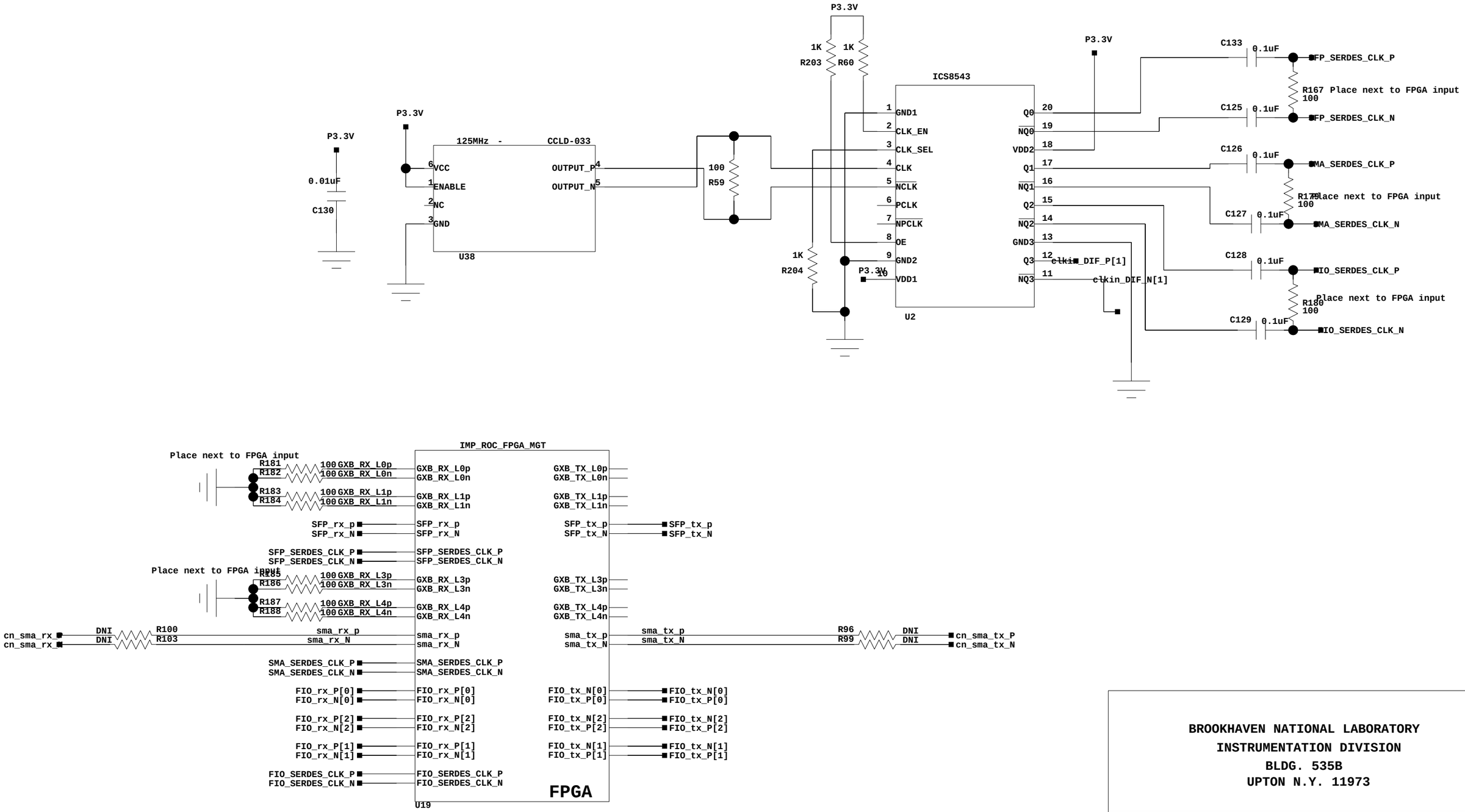

BROOKHAVEN NATIONAL LABORATORY
INSTRUMENTATION DIVISION
BLDG. 535B
UPTON N.Y. 11973

IMP FPGA MGT

Date: 23/10/2015:14:48

DRAWN BY: Jack Fried

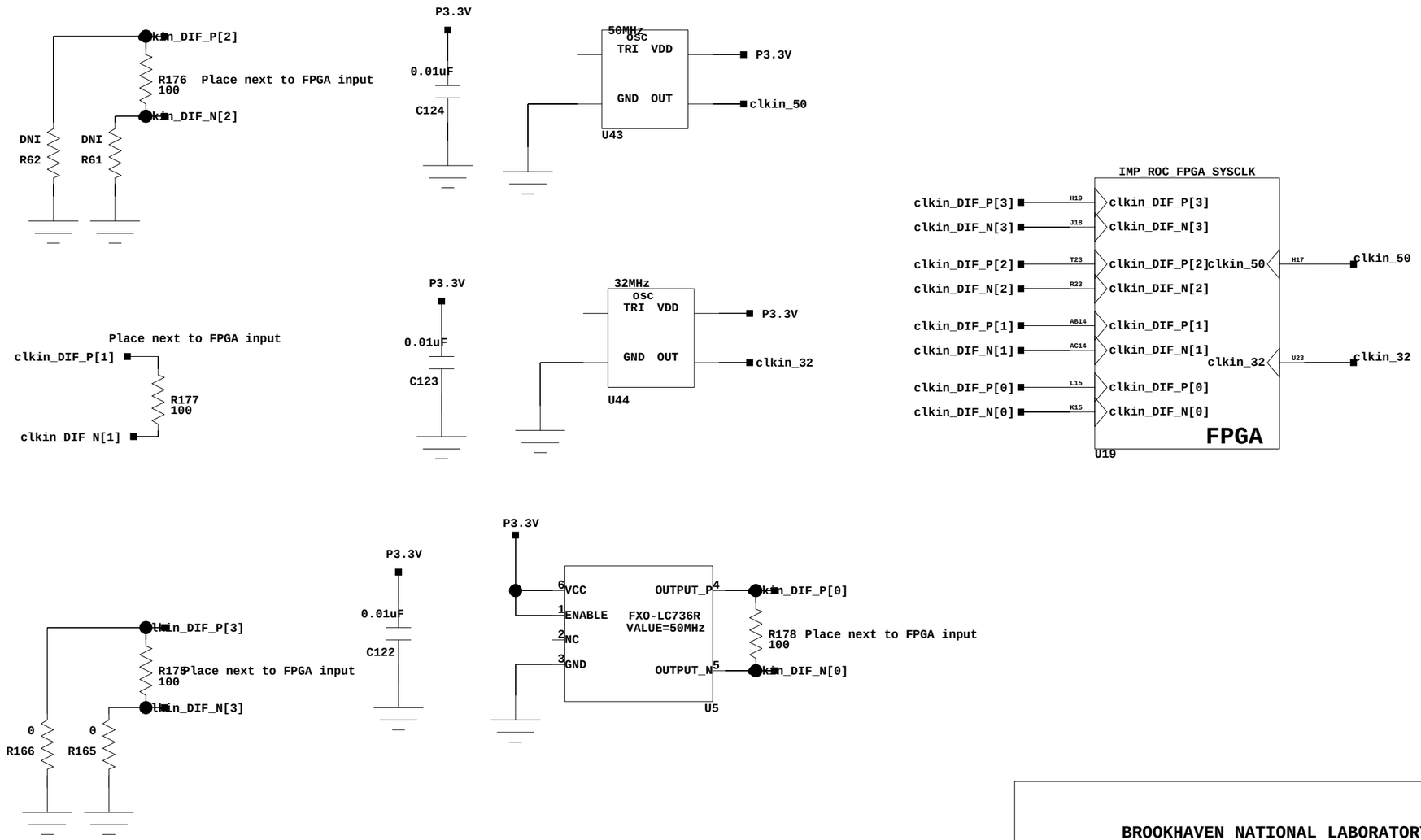

BROOKHAVEN NATIONAL LABORATORY
INSTRUMENTATION DIVISION
BLDG. 535B
UPTON N.Y. 11973

IMP FPGA CLOCKS

Date: 31/08/2015:14:46

DRAWN BY: Jack Fried

ON BOARD FLASH MEMORY

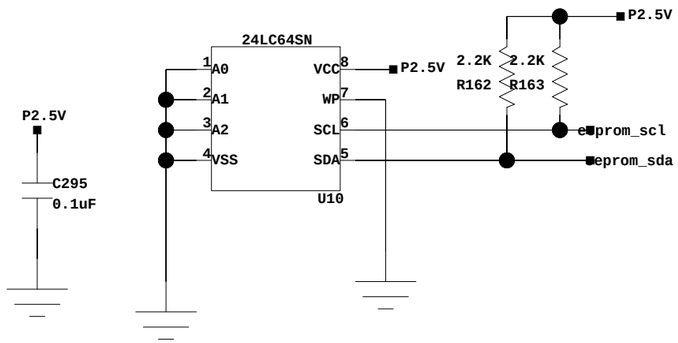

SYSTEM IP SELECTION

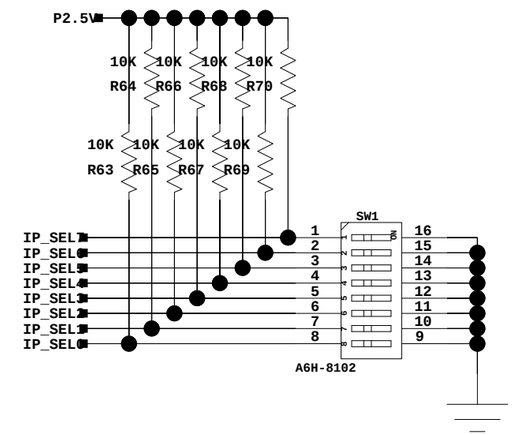

POWER ON RESET

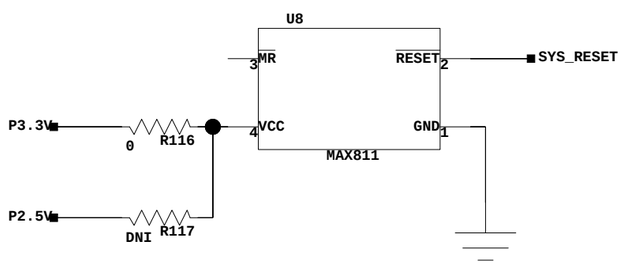

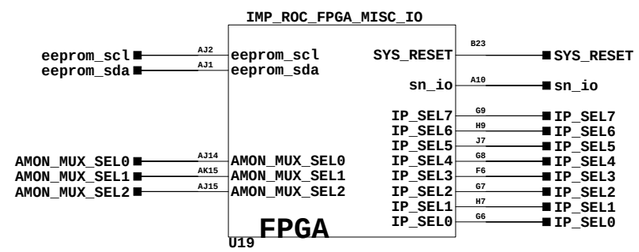

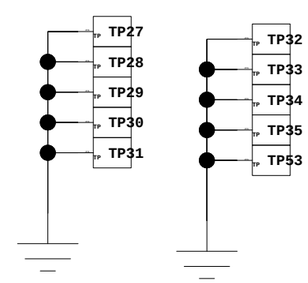

Silicon Serial Numb

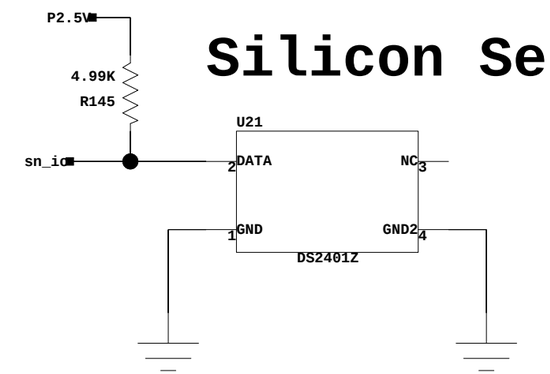

BROOKHAVEN NATIONAL LABORATORY
INSTRUMENTATION DIVISION
BLDG. 535B
UPTON N.Y. 11973

IMP MISC IO

Date: 23/09/2016:16:14

DRAWN BY: Jack Fried

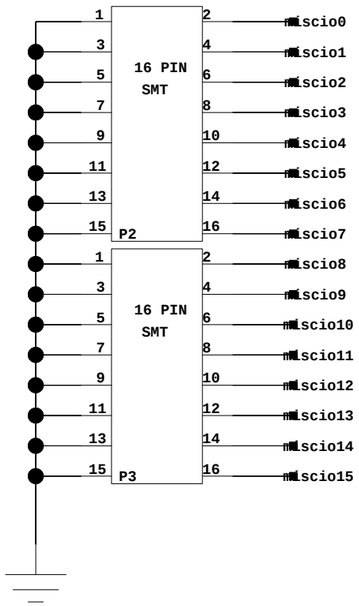

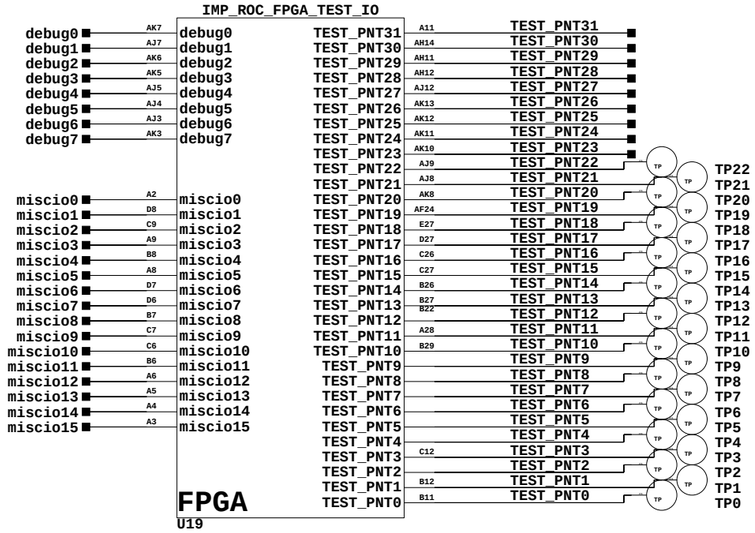

LEDS

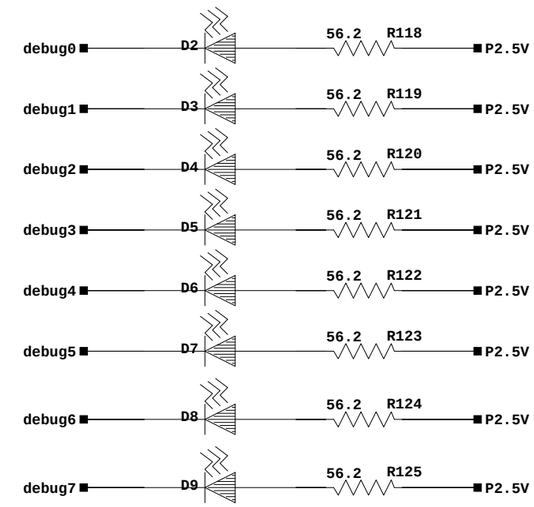

BROOKHAVEN NATIONAL LABORATORY
INSTRUMENTATION DIVISION
BLDG. 535B
UPTON N.Y. 11973

IMP TEST POINTS

Date: 05/05/2016:17:33

DRAWN BY: Jack Fried

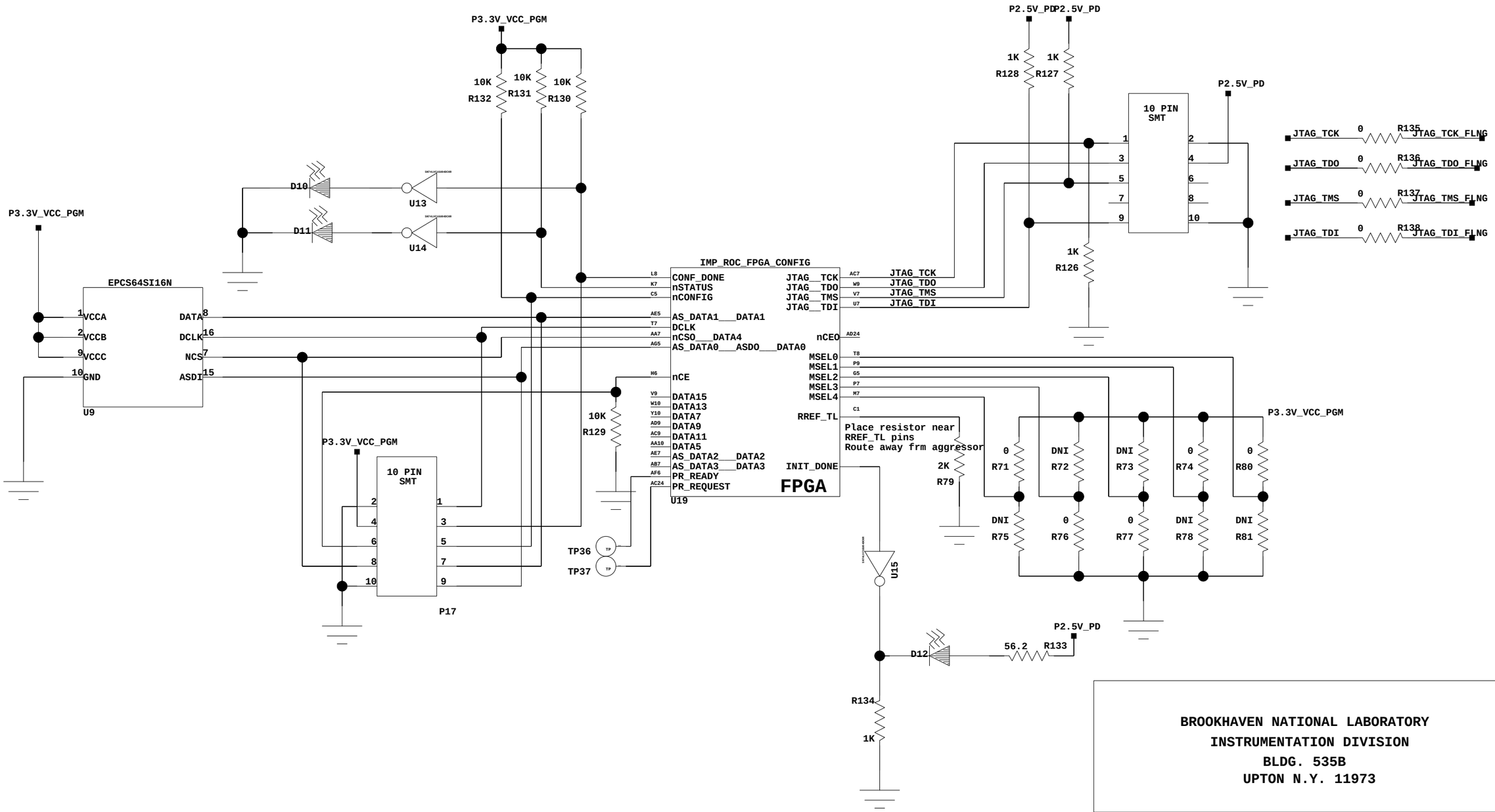

BROOKHAVEN NATIONAL LABORATORY
INSTRUMENTATION DIVISION
BLDG. 535B
UPTON N.Y. 11973

IMP FPGA CONFIG

Date: 15/07/2015:11:48

DRAWN BY: Jack Fried

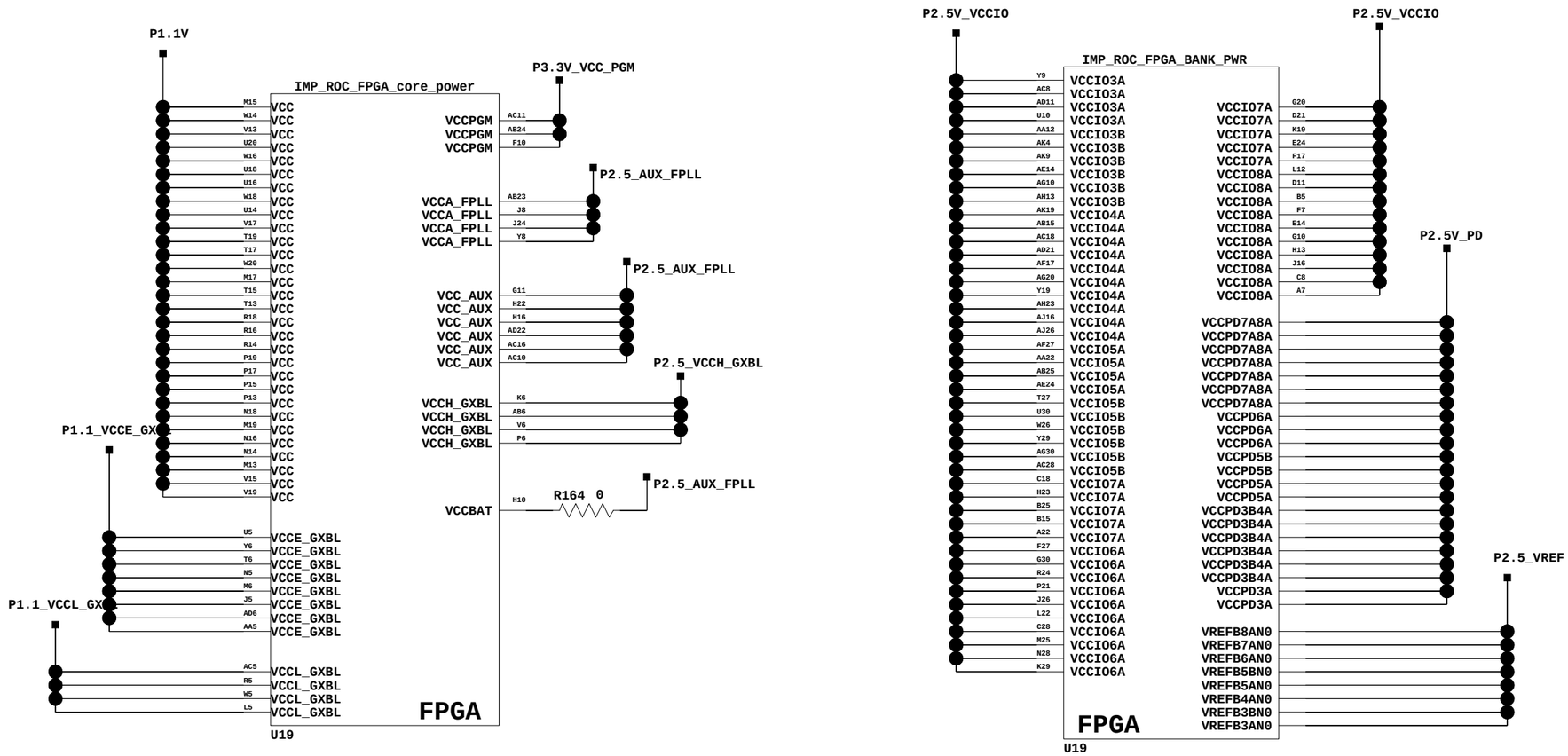

BROOKHAVEN NATIONAL LABORATORY
INSTRUMENTATION DIVISION
BLDG. 535B
UPTON N.Y. 11973

IMP FPGA POWER IO

Date: 25/05/2016:12:17

DRAWN BY: Jack Fried

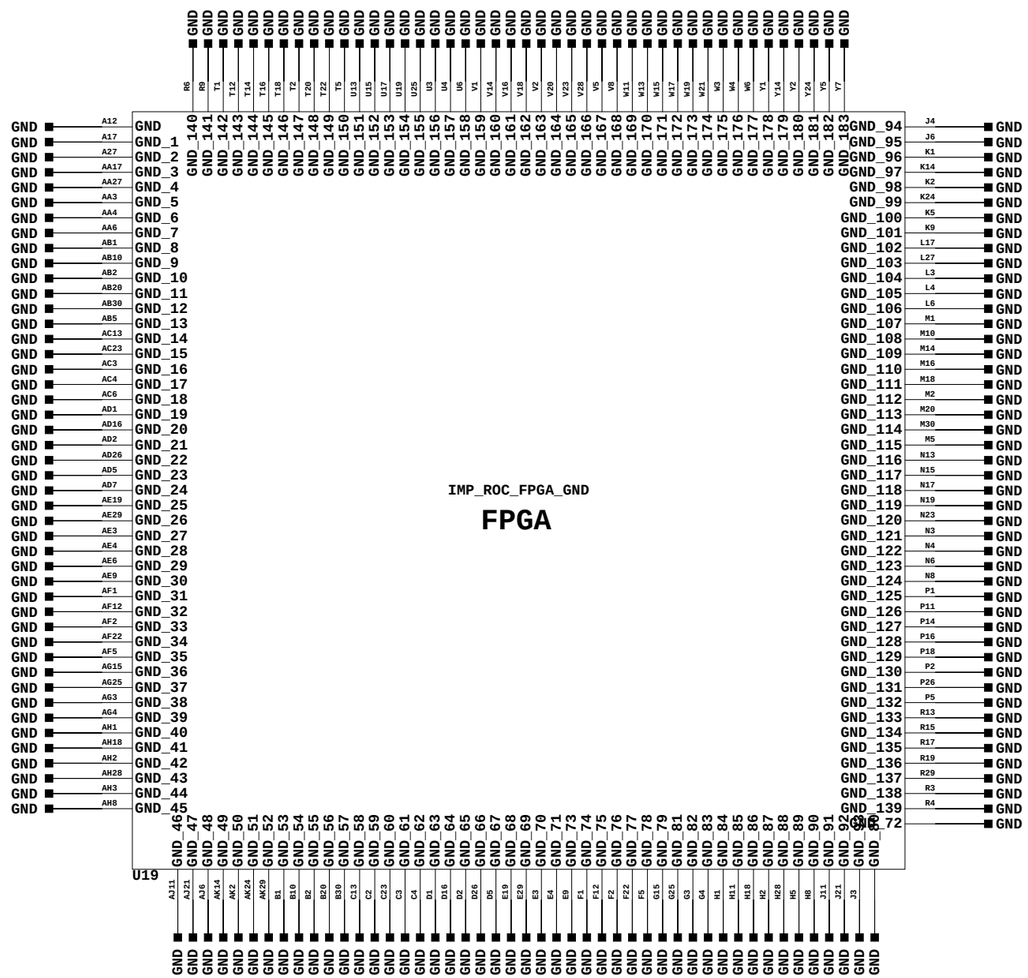

BROOKHAVEN NATIONAL LABORATORY
INSTRUMENTATION DIVISION
BLDG. 535B
UPTON N.Y. 11973

IMP FPGA GROUND

Date: 25/05/2016:11:49

DRAWN BY: Jack Fried

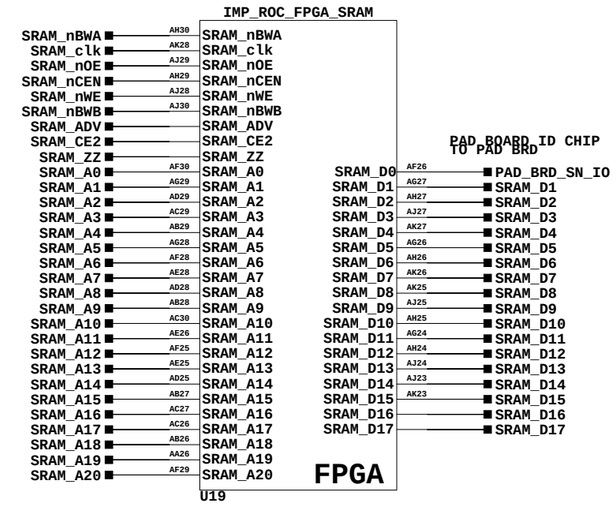

BROOKHAVEN NATIONAL LABORATORY
INSTRUMENTATION DIVISION
BLDG. 535B
UPTON N.Y. 11973

IMP FPGA UNUSED

Date: 09/03/2016:18:37

DRAWN BY: Jack Fried

PULL UP FOR OPEN DRAIN OUTPUTS

Place next to regulators

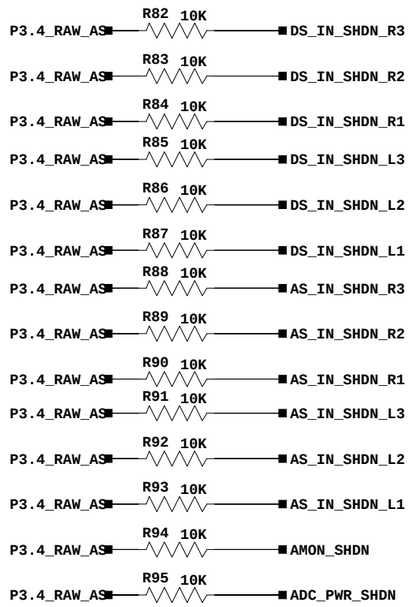

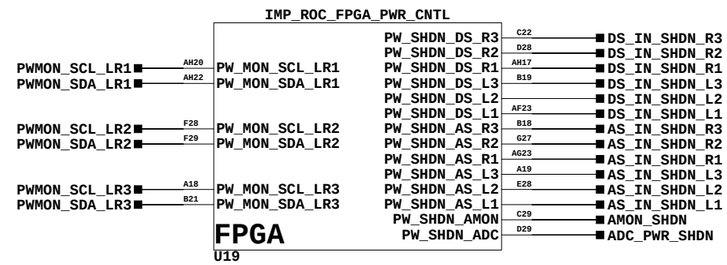

FPGA OPEN DRAIN

BROOKHAVEN NATIONAL LABORATORY
INSTRUMENTATION DIVISION
BLDG. 535B
UPTON N.Y. 11973

IMP POWER CONTROL FPGA IO

Date: 21/05/2015:14:10

DRAWN BY: Jack Fried

POWER/TEMP MONITOR

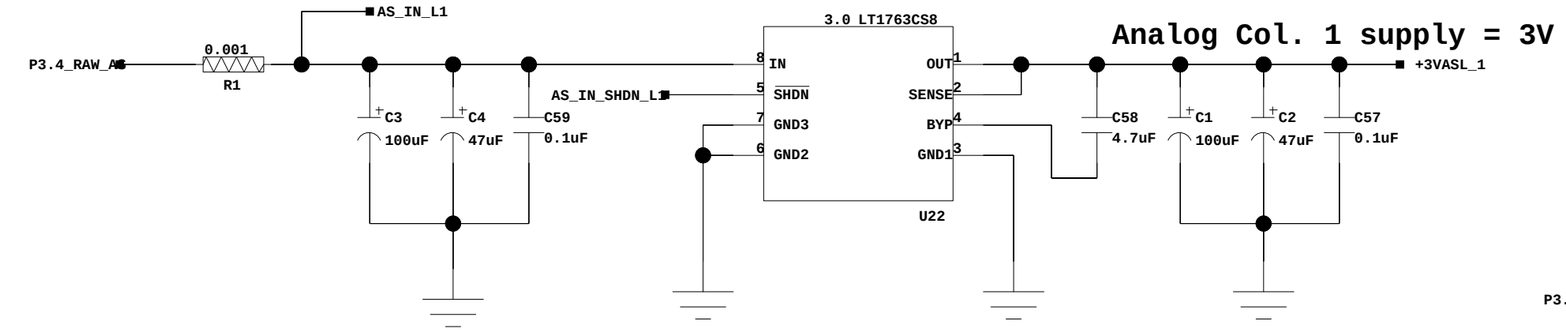

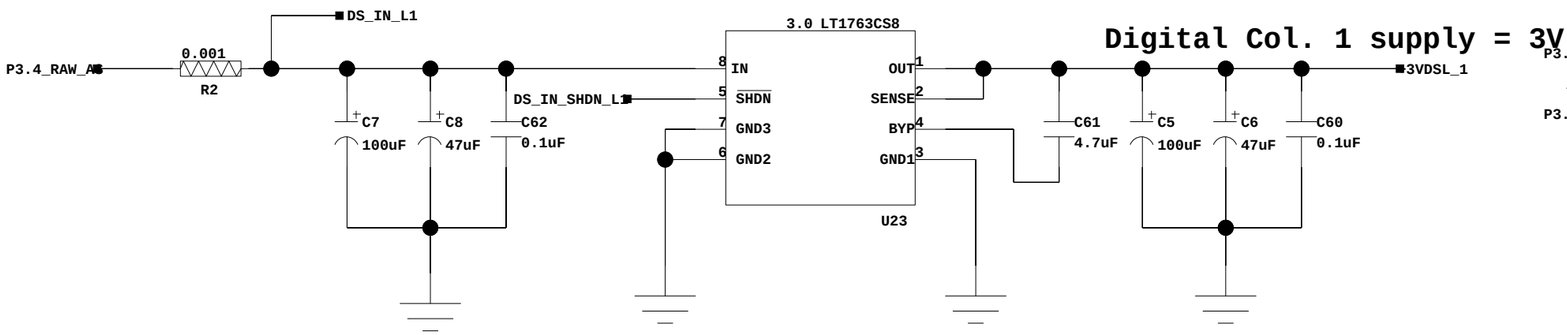

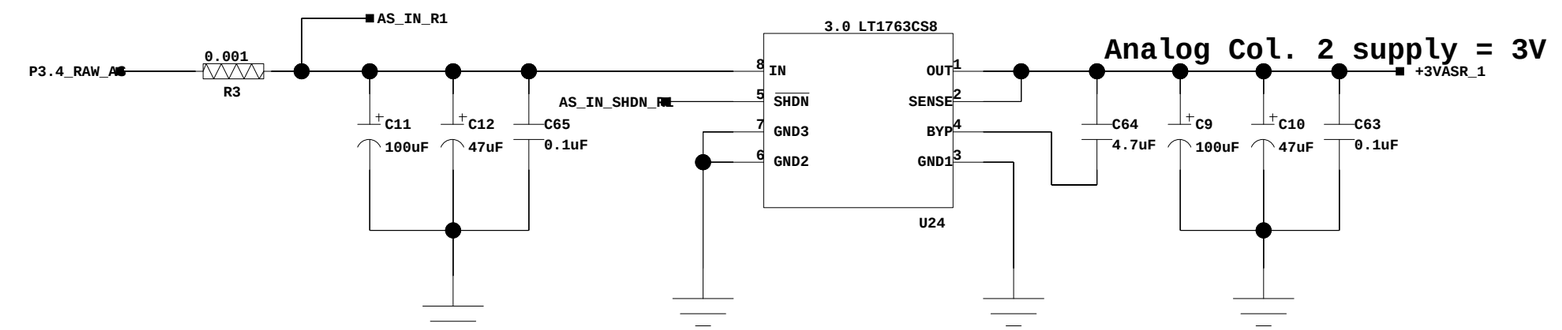

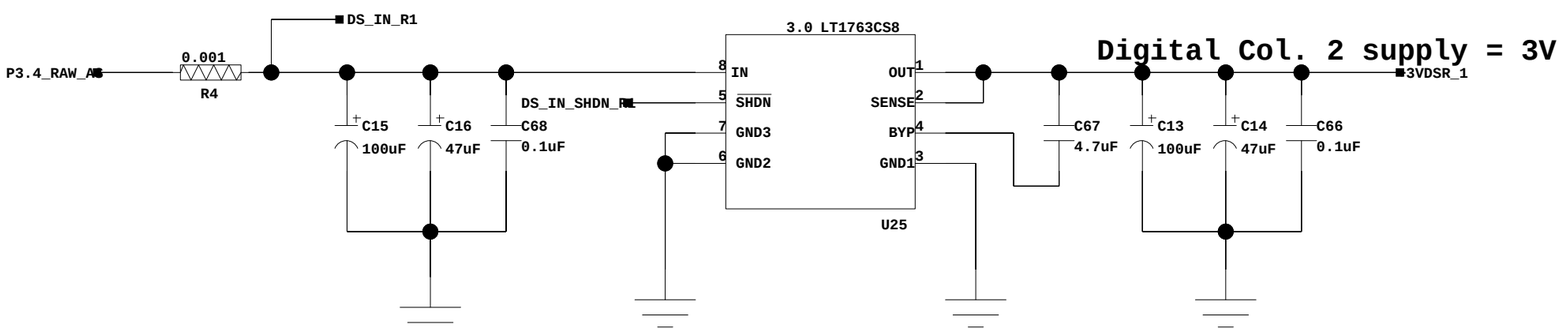

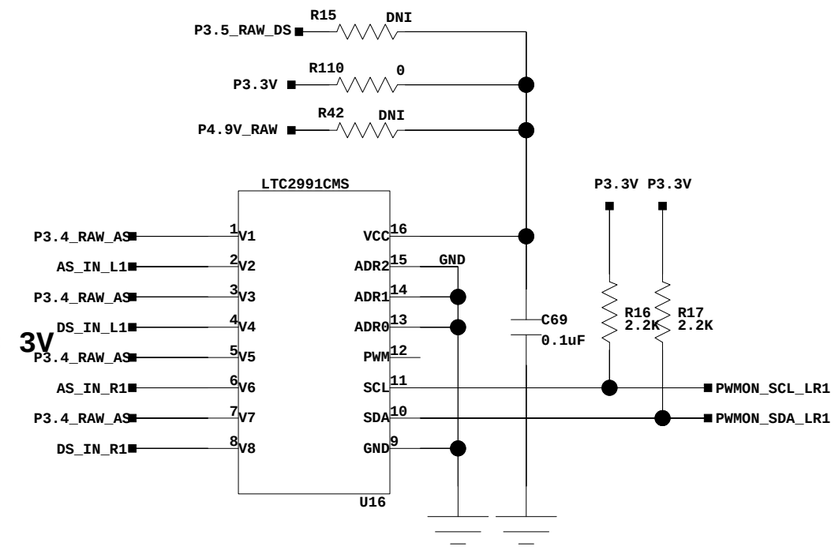

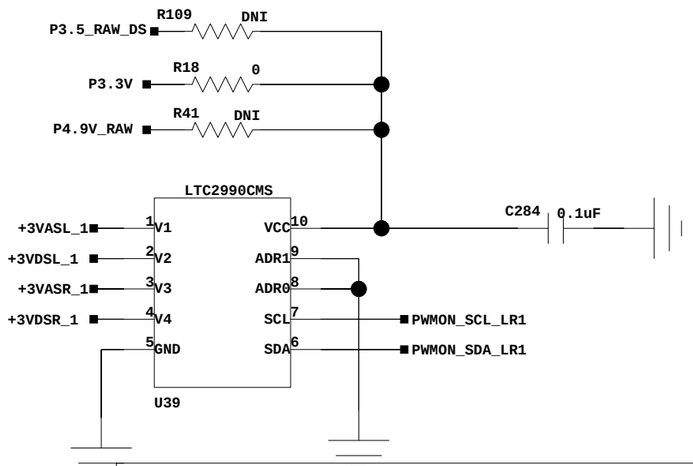

BROOKHAVEN NATIONAL LABORATORY
INSTRUMENTATION DIVISION
BLDG. 535B
UPTON N.Y. 11973

IMP POWER COLUMN 1,2

Date: 17/04/2015:11:30

DRAWN BY: Jack Fried

POWER/TEMP MONITOR

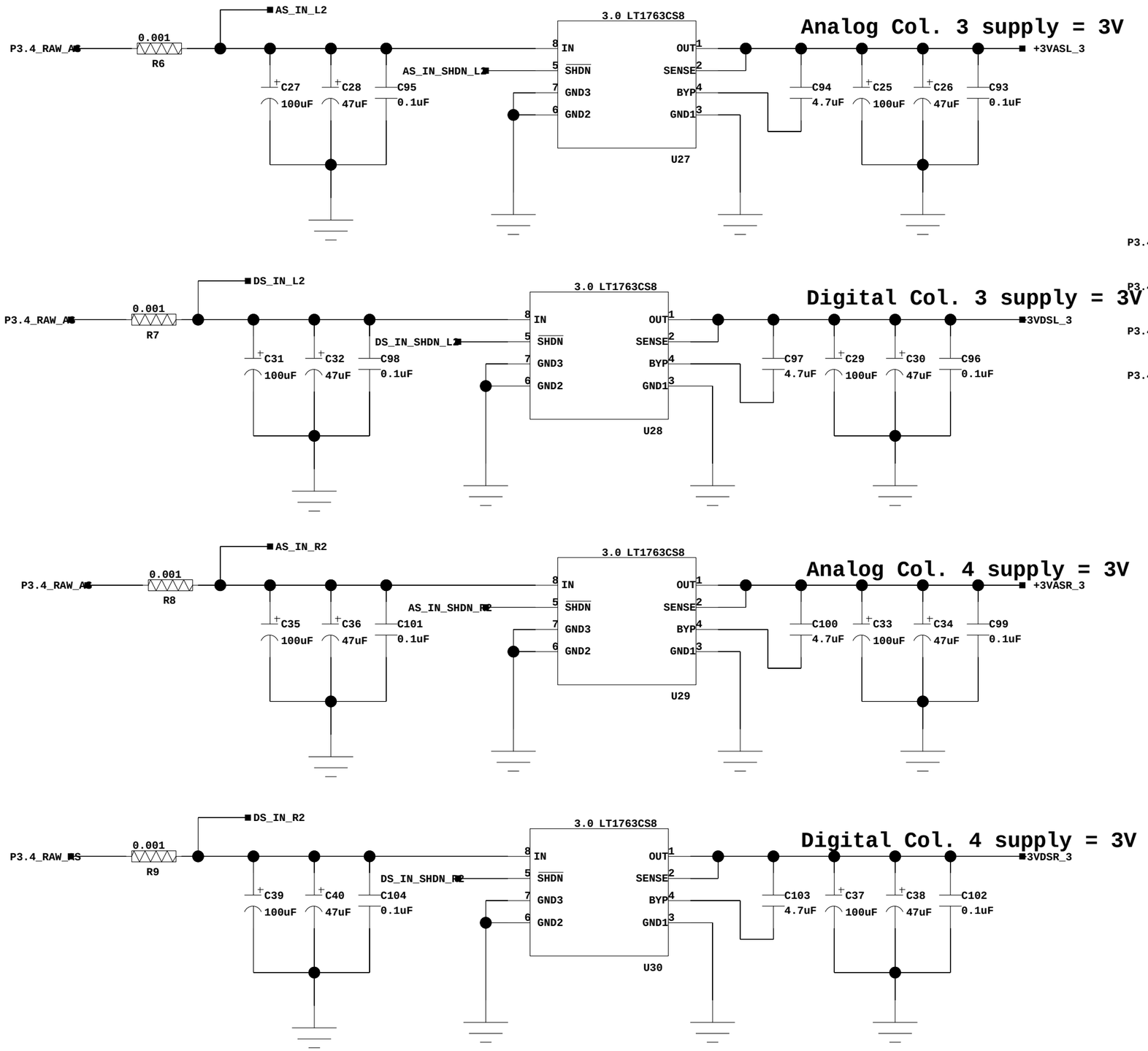

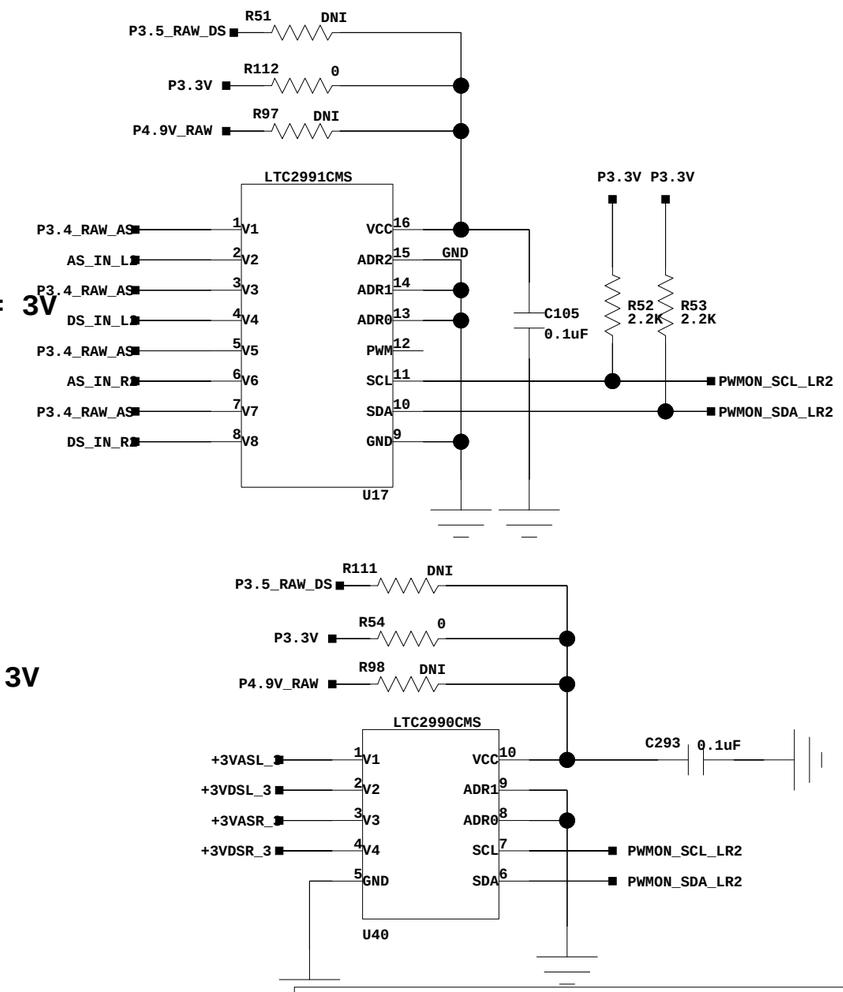

BROOKHAVEN NATIONAL LABORATORY
INSTRUMENTATION DIVISION
BLDG. 535B
UPTON N.Y. 11973

IMP POWER COLUMN 3,4

Date: 17/04/2015:11:30

DRAWN BY: Jack Fried

POWER/TEMP MONITOR

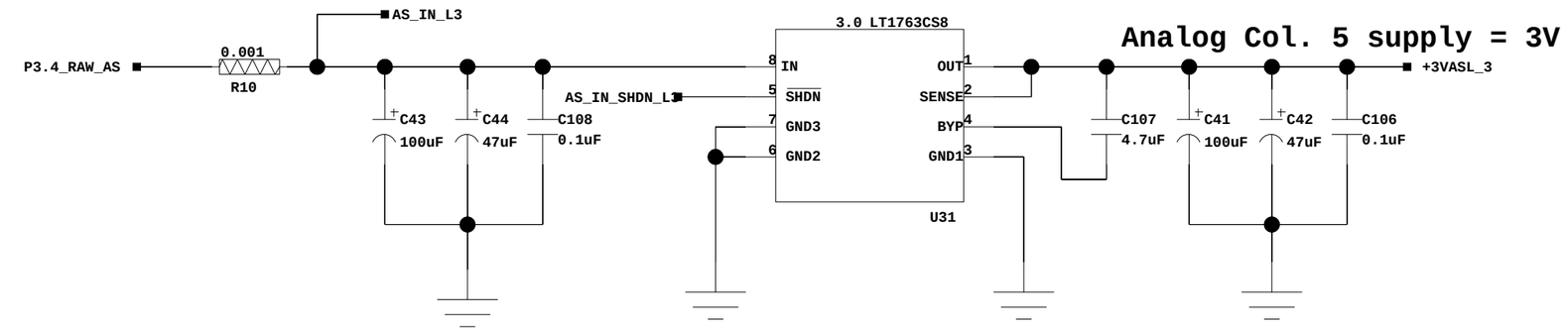

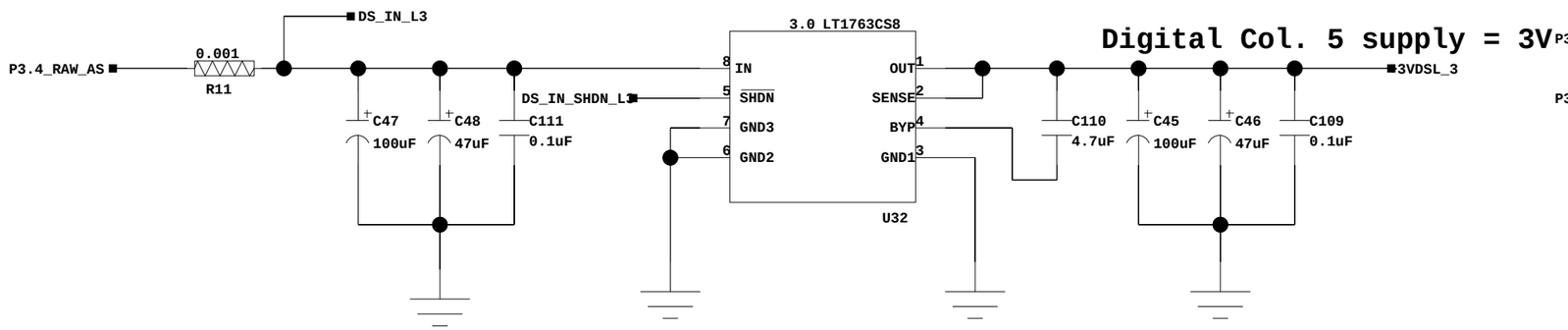

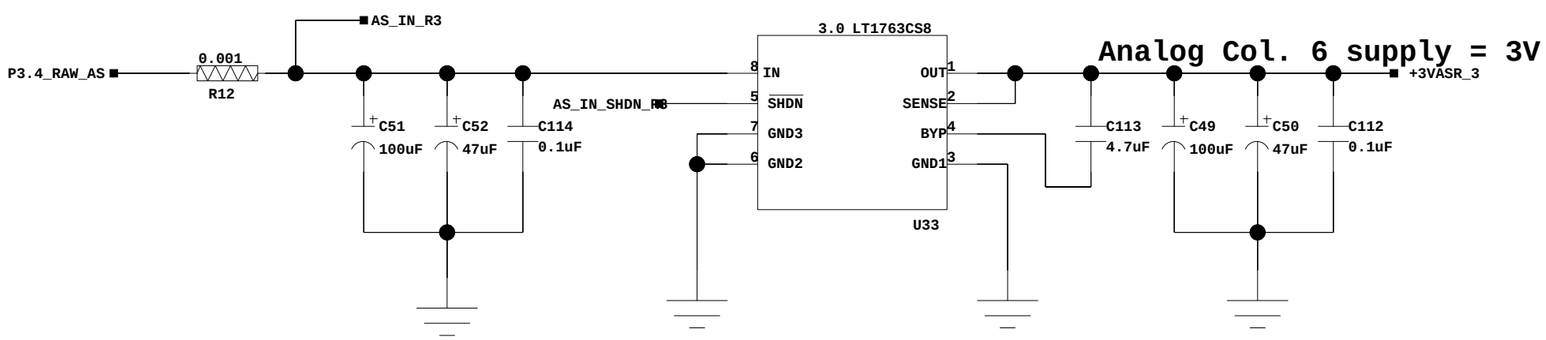

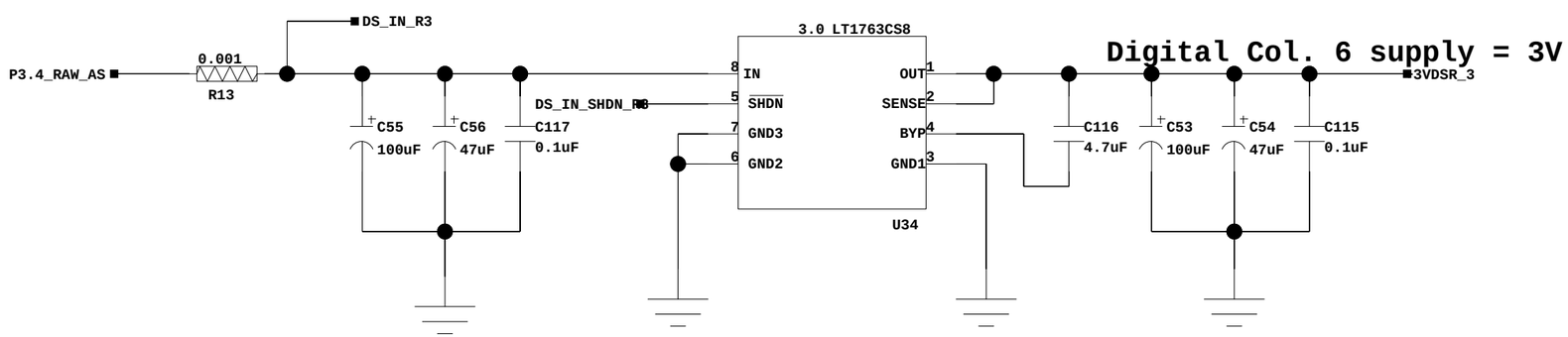

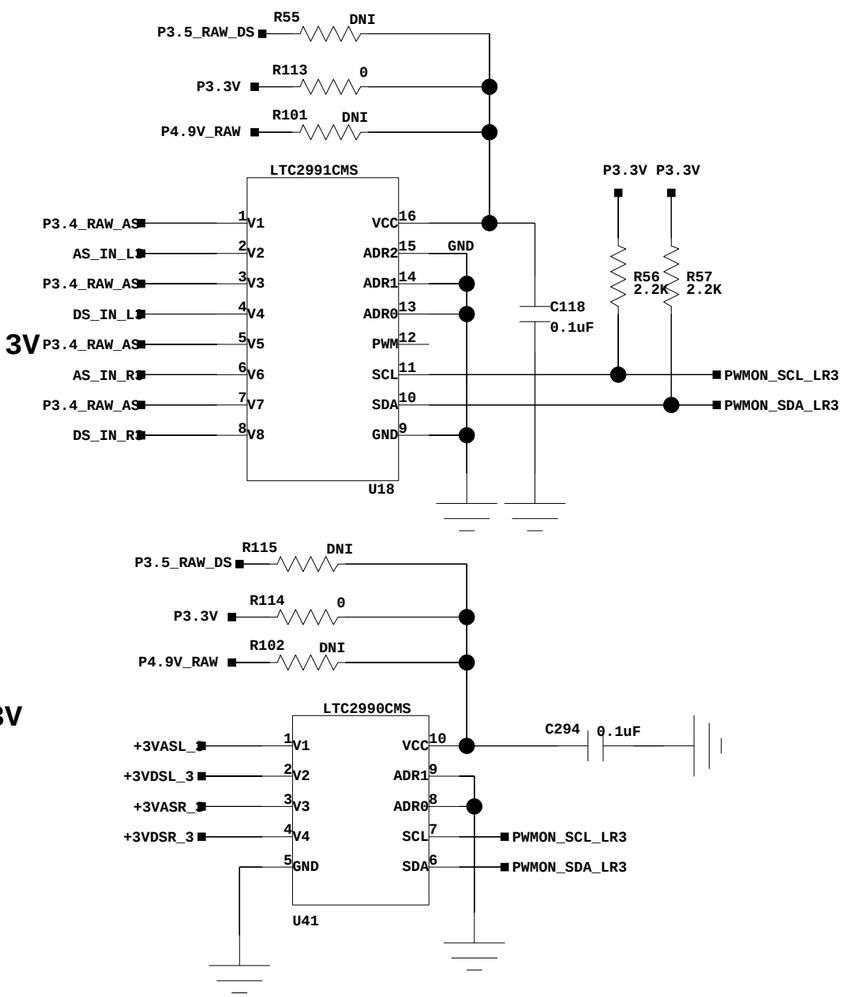

BROOKHAVEN NATIONAL LABORATORY
INSTRUMENTATION DIVISION
BLDG. 535B
UPTON N.Y. 11973

IMP POWER COLUMN 5,6

Date: 17/04/2015:11:30

DRAWN BY: Jack Fried

LINEAR REGULATOR

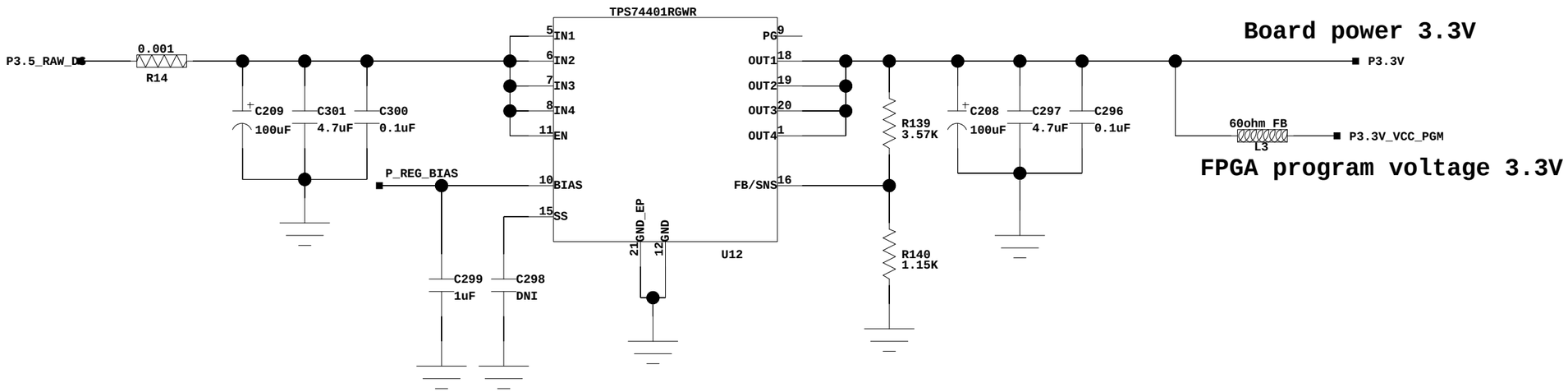

LINEAR REGULATOR

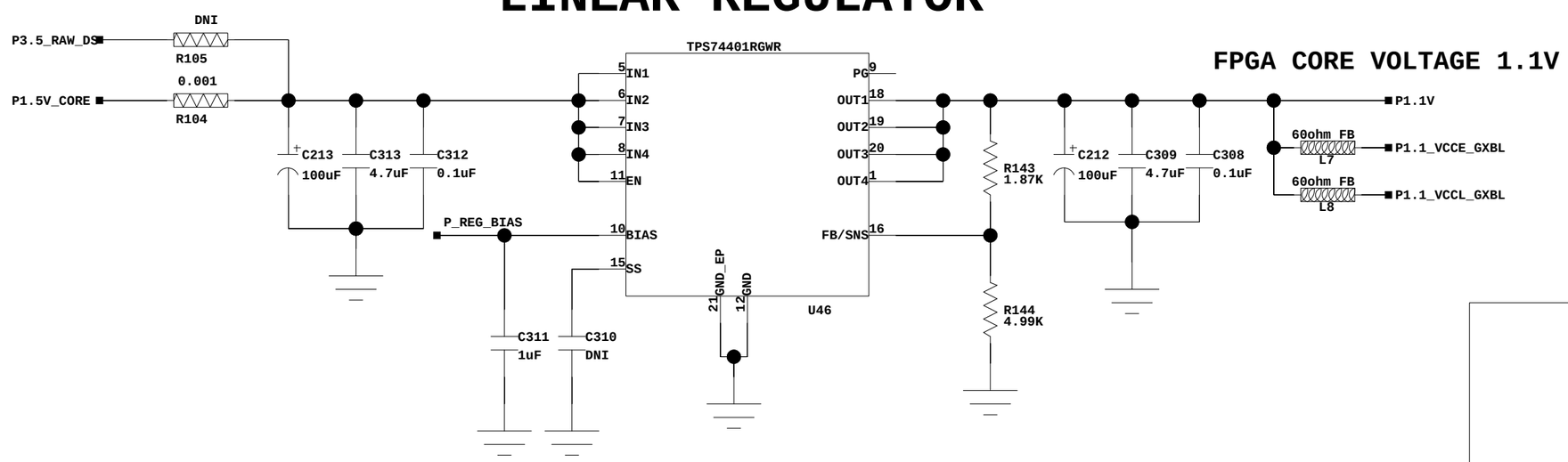

BROOKHAVEN NATIONAL LABORATORY
INSTRUMENTATION DIVISION
BLDG. 535B
UPTON N.Y. 11973

IMP FPGA
POWER 1.1V,3.3V

Date: 02/02/2015:20:28

DRAWN BY: Jack Fried

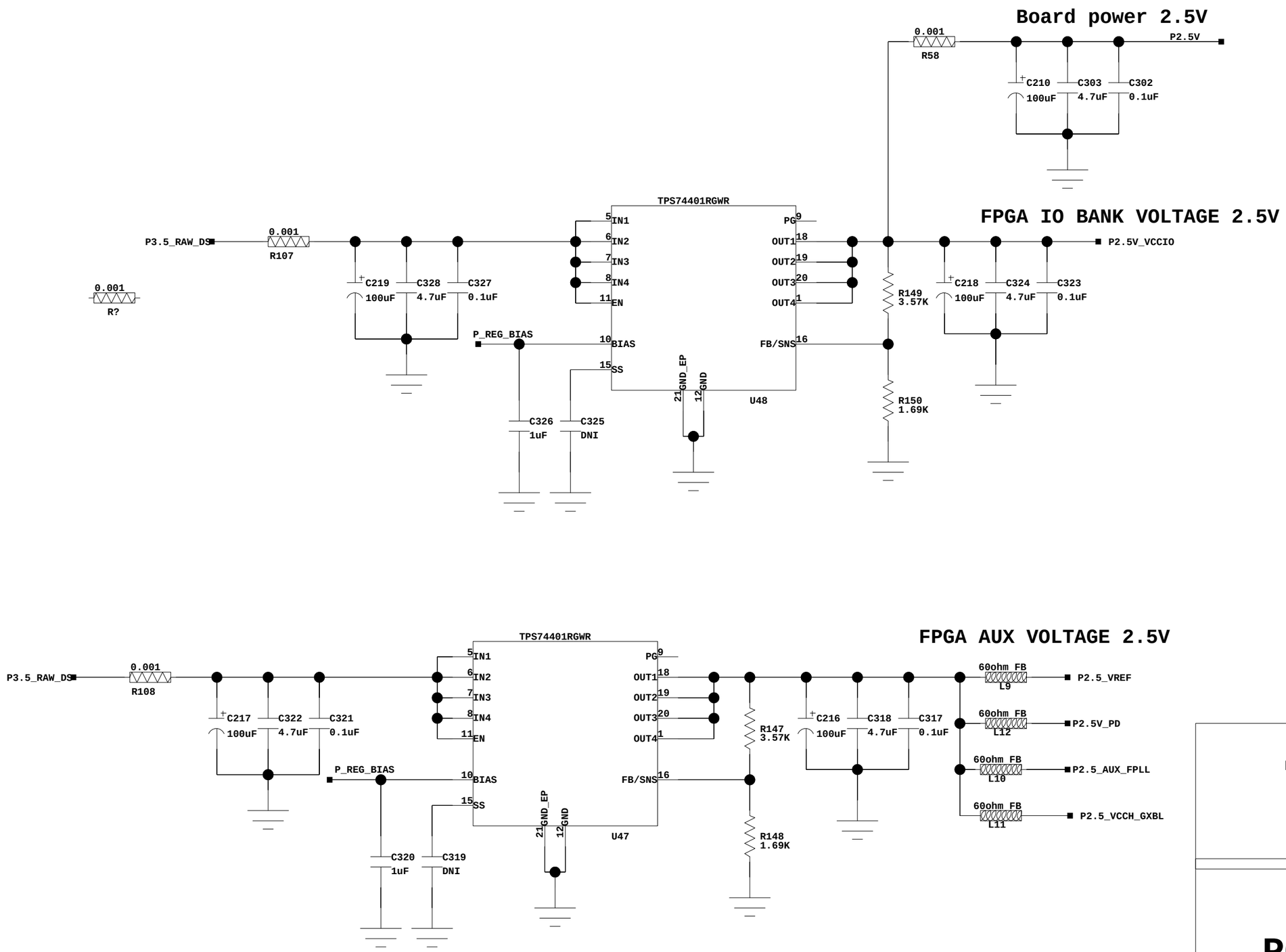

BROOKHAVEN NATIONAL LABORATORY
INSTRUMENTATION DIVISION
BLDG. 535B
UPTON N.Y. 11973

IMP FPGA POWER 2.5V

Date: 25/05/2016:12:26

DRAWN BY: Jack Fried

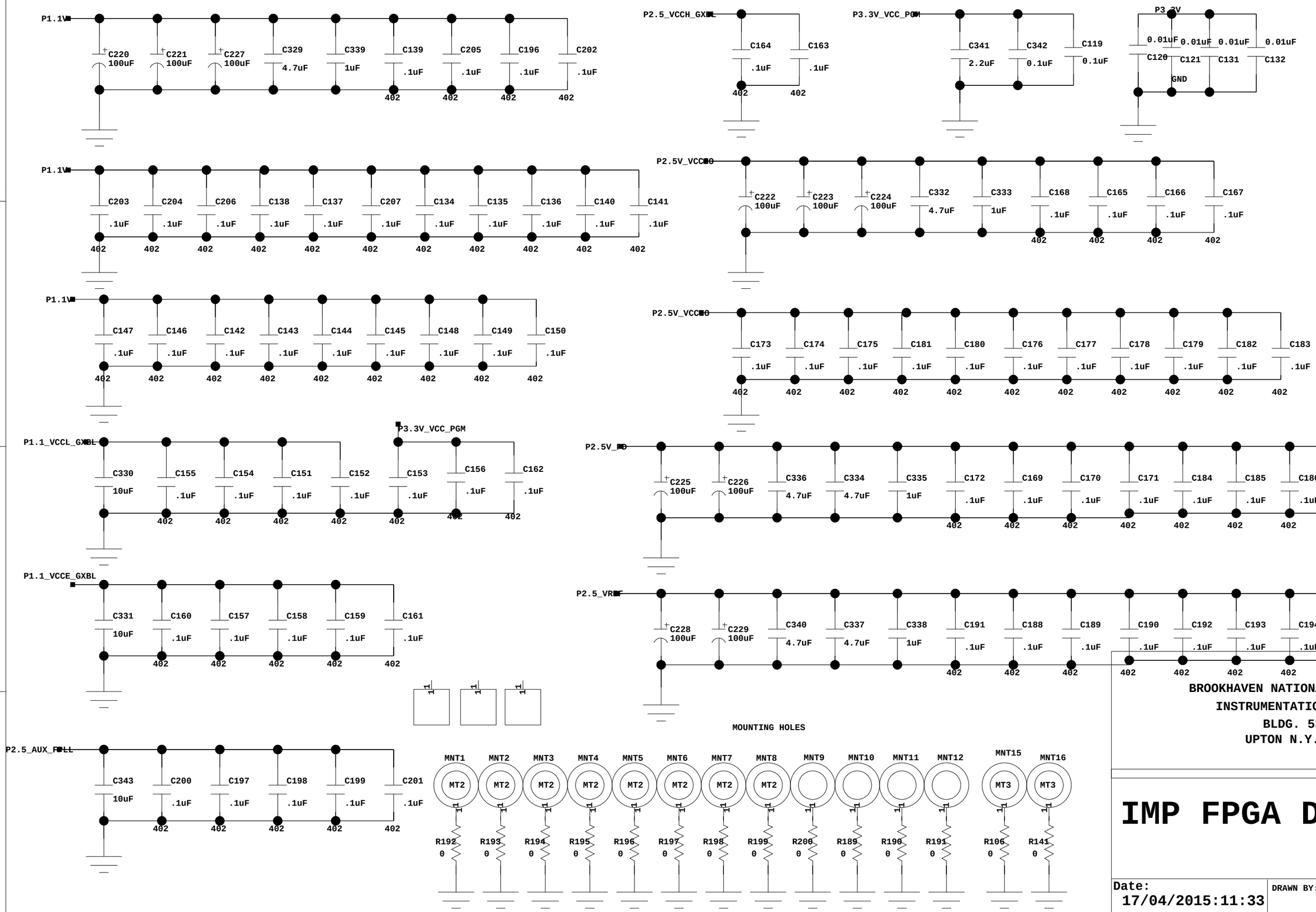

BROOKHAVEN NATIONAL LABORATORY
INSTRUMENTATION DIVISION
BLDG. 535B
UPTON N.Y. 11973

IMP FPGA DECOUPLING

Date: 17/04/2015:11:33

DRAWN BY: Jack Fried