DUNE ANALOG MOTHER BOARD
(1GOhm version)

TABLE OF CONTENTS

SHEET 1: Power Left 1
SHEET 2: Power Left 2
SHEET 3: Power Right 1
SHEET 4: Power Right 2
SHEET 5: Signal Inputs
SHEET 6: Input Protection Diods 1
SHEET 7: Input Protection Diods 1
SHEET 8: Input Caps and Inductors
SHEET 9: FE + ADC TopLeft 1
SHEET 10: FE + ADC TopLeft 2
SHEET 11: FE + ADC BottomLeft 1
SHEET 12: FE + ADC BottomLeft 2
SHEET 13: FE + ADC TopRight 1
SHEET 14: FE + ADC TopRight 2
SHEET 15: FE + ADC BottomRight 1
SHEET 16: FE + ADC BottomRight 2
SHEET 17: Signal Outputs 1
SHEET 18: Signal Outputs 2

COMPANY	BROOKHAVEN NATIONAL LABORATORY			
TITLE	DUNE ANALOG MOTHER BOARD			
SIZE B	REV	SHEET Cover	OF	
DRAWN	SHANSHAN GAO	DATE	05/07/2016:17:56	

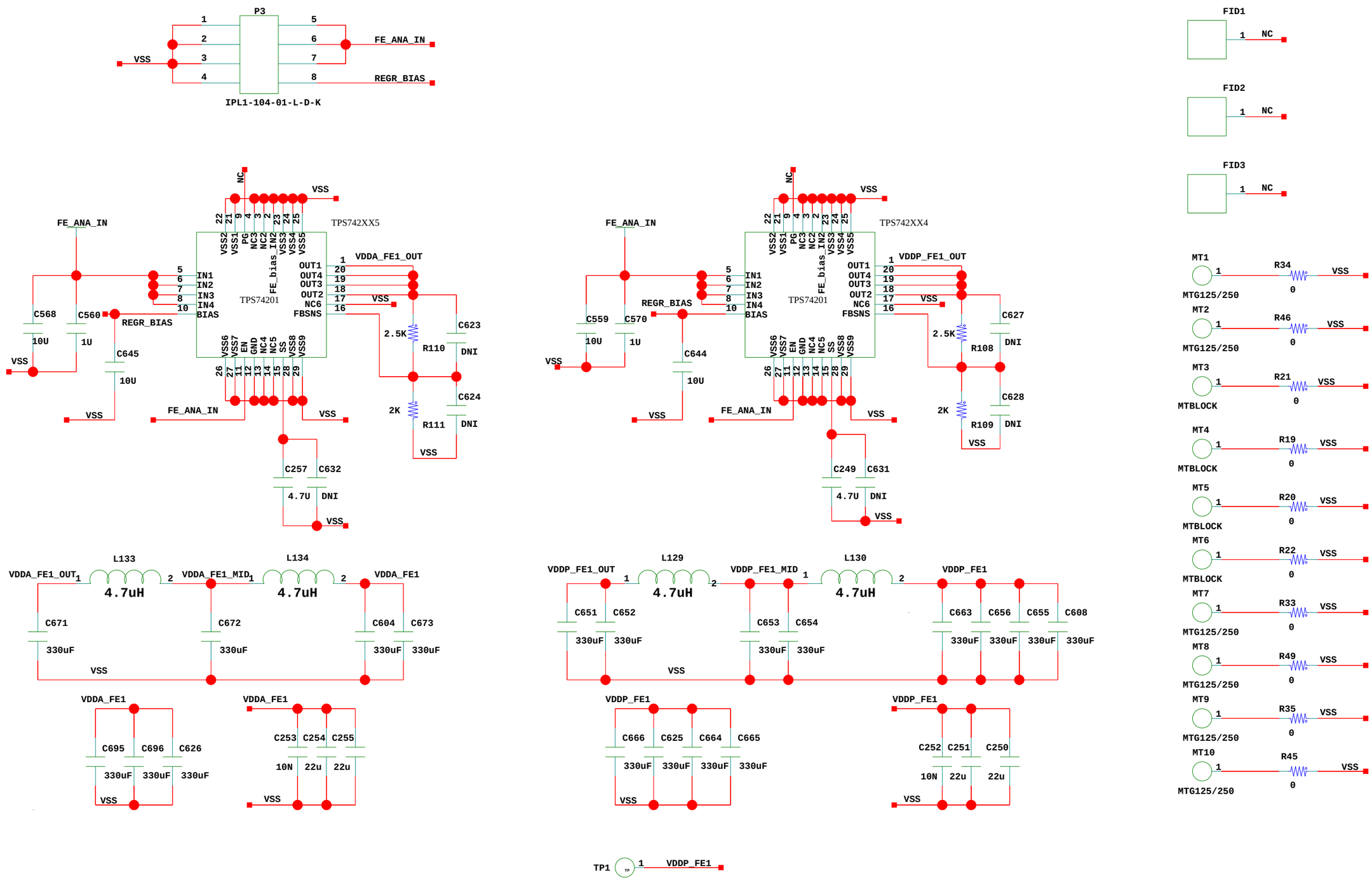

COMPANY
BROOKHAVEN NATIONAL LABORATORY

TITLE
DUNE ANALOG MOTHER BOARD

SIZE B	REV	SHEET 1 OF 18	
DRAWN SHANSHAN GAO		DATE 07/07/2016:17:54	

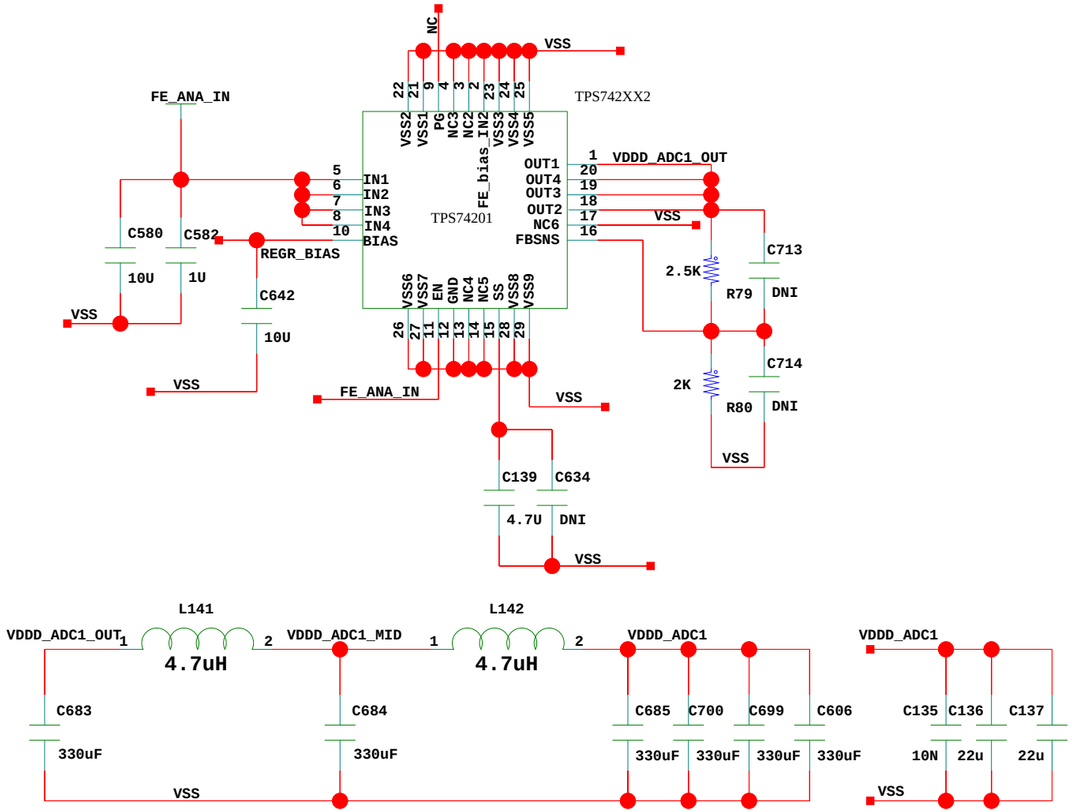

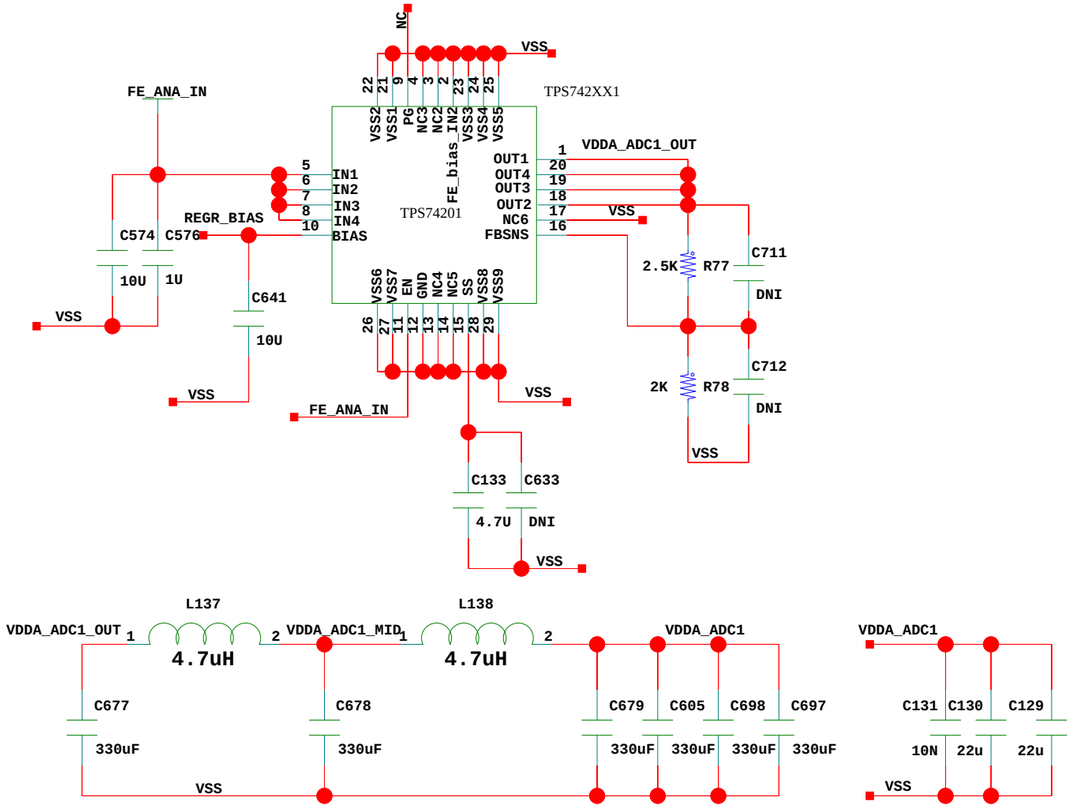

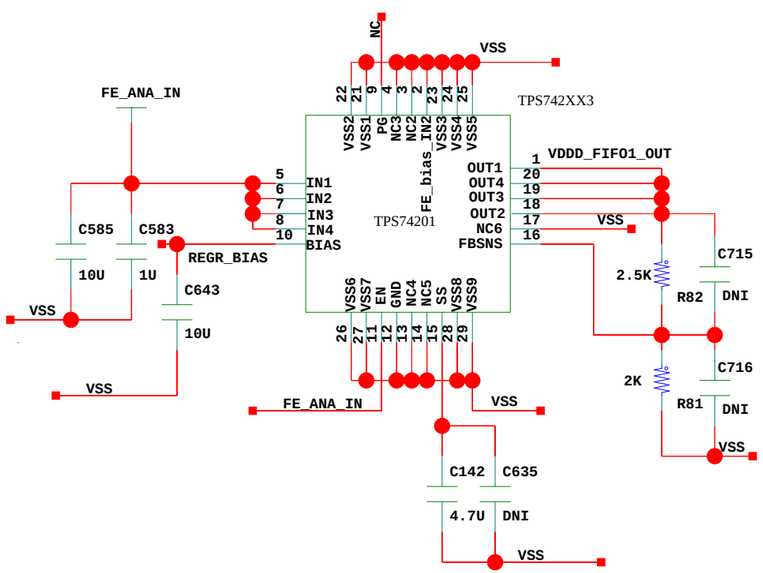

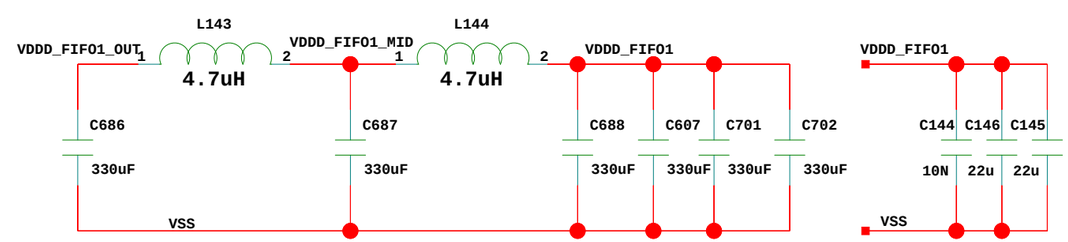

COMPANY
BROOKHAVEN NATIONAL LABORATORY

TITLE
DUNE ANALOG MOTHER BOARD

SIZE	B	REV		SHEET	2	OF	18
DRAWN	SHANSHAN GAO			DATE	07/07/2016:17:58		

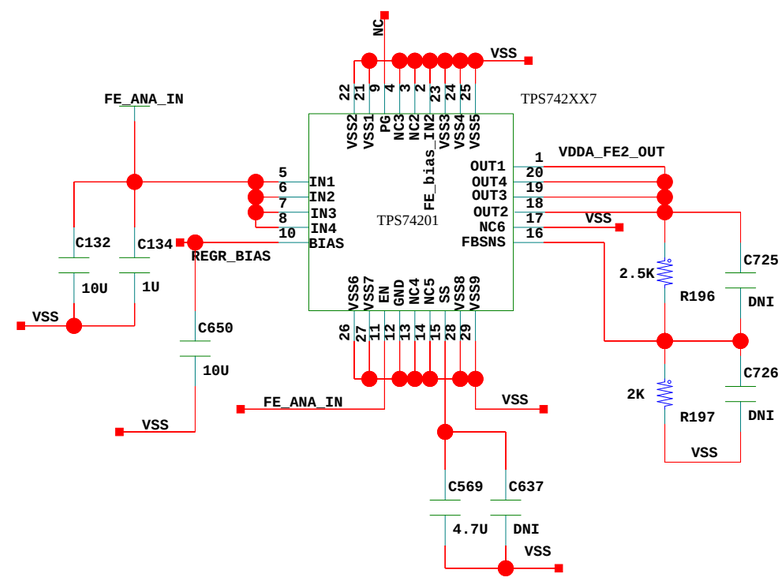

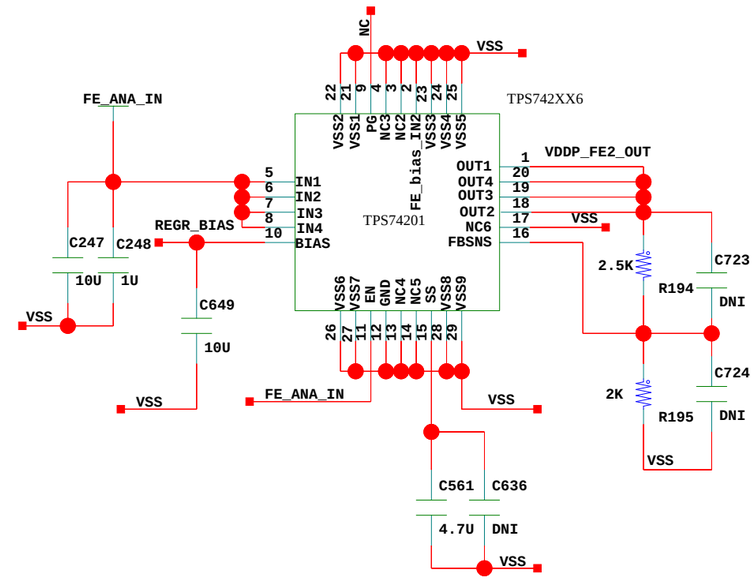

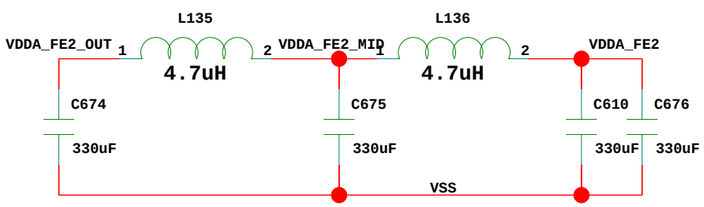

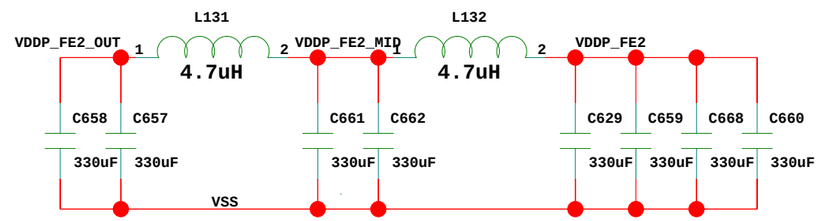

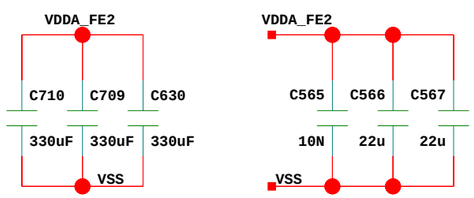

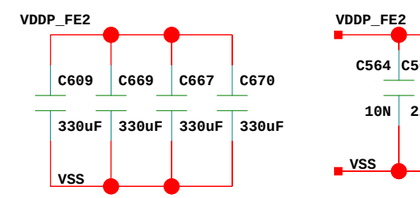

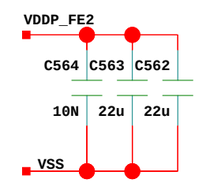

COMPANY
BROOKHAVEN NATIONAL LABORATORY

TITLE
DUNE ANALOG MOTHER BOARD

SIZE B	REV	SHEET 3	OF 18
DRAWN SHANSHAN GAO		DATE 07/07/2016:18:03	

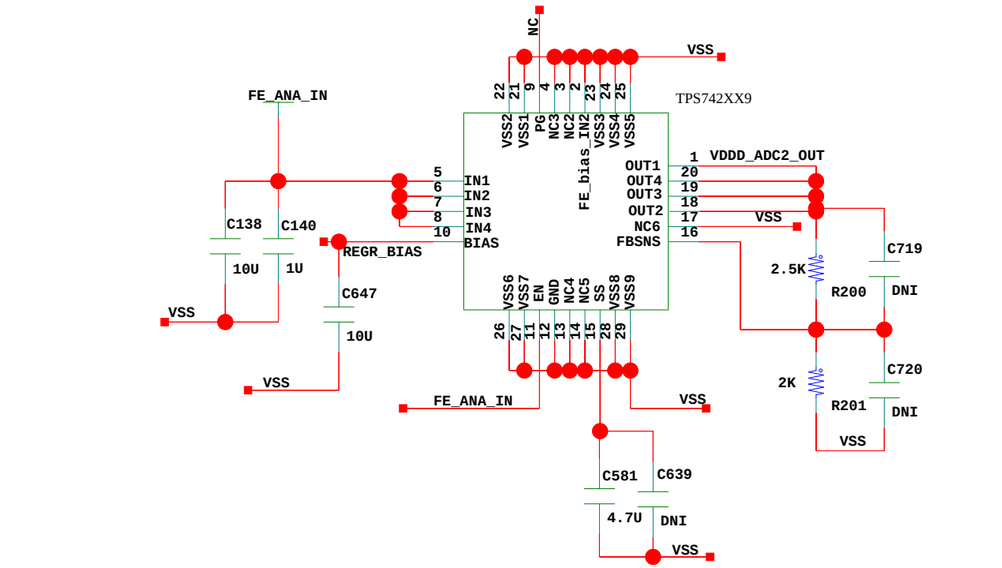

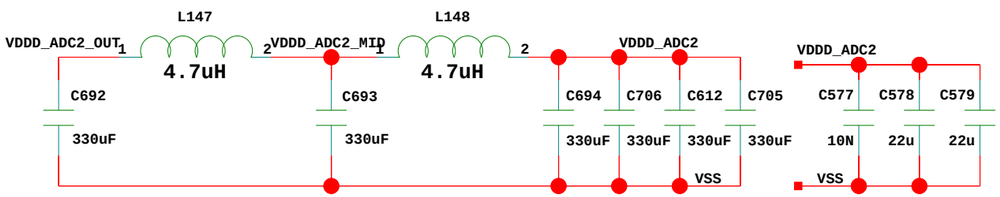

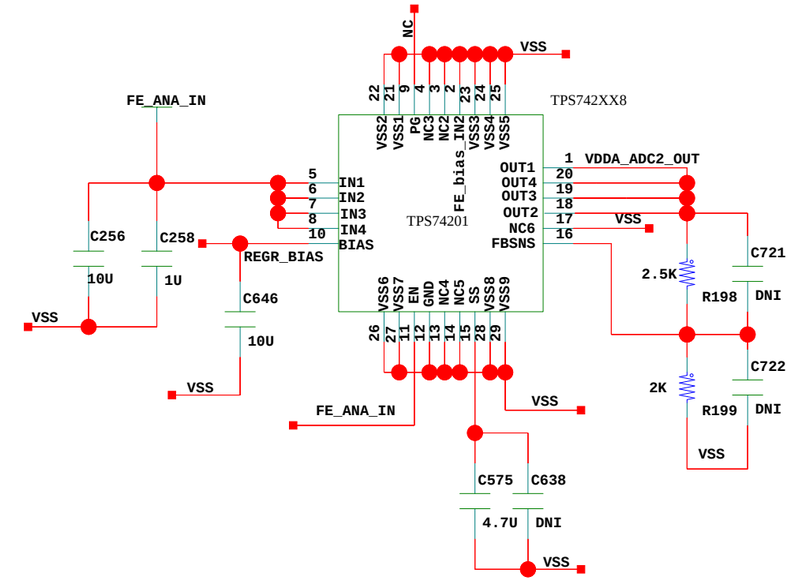

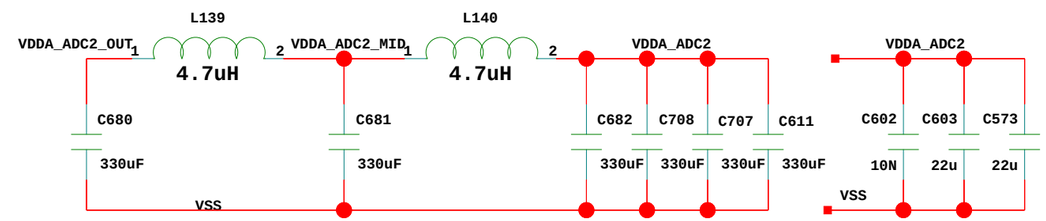

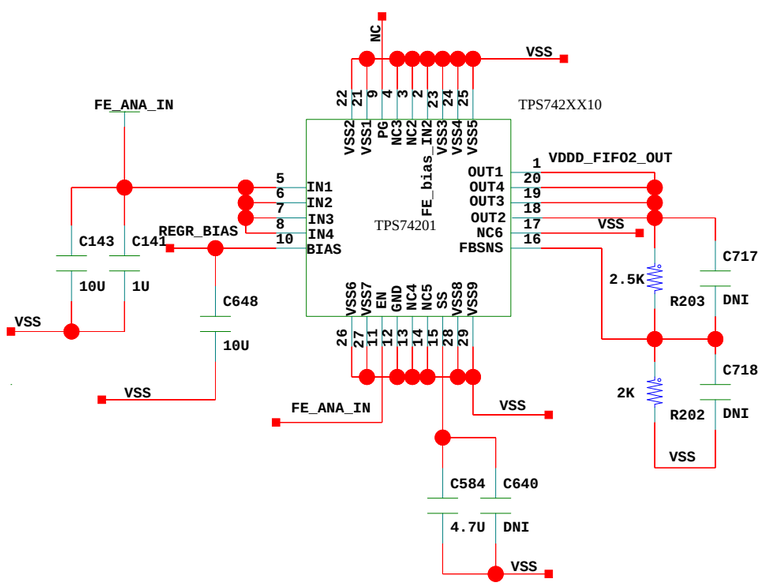

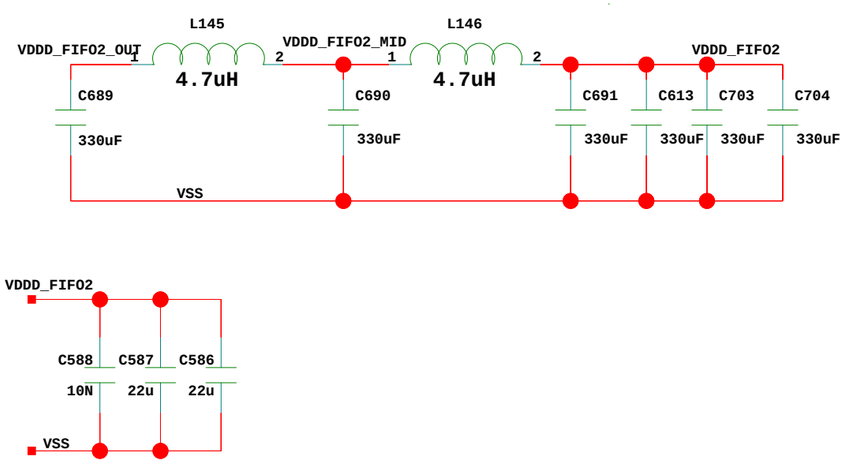

COMPANY
BROOKHAVEN NATIONAL LABORATORY

TITLE
DUNE ANALOG MOTHER BOARD

SIZE	B	REV		SHEET	4	OF	18
DRAWN	SHANSHAN GAO			DATE	07/07/2016:18:03		

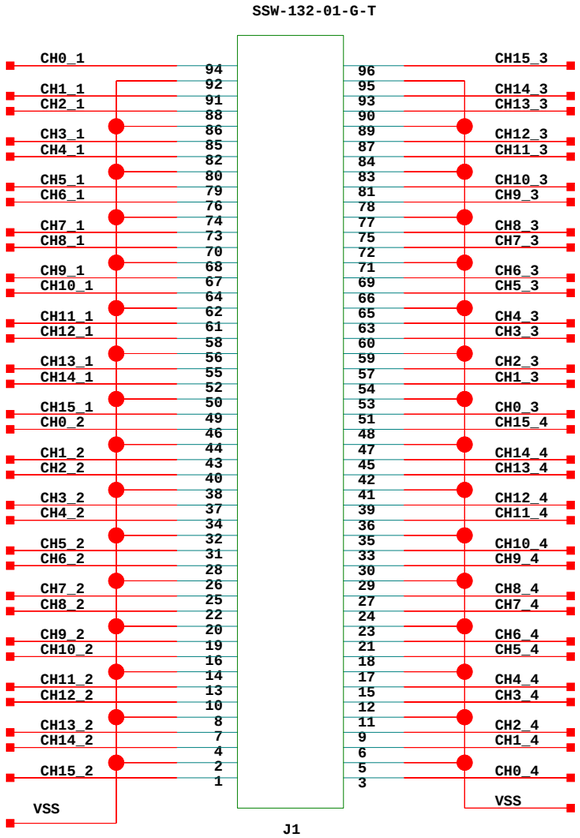

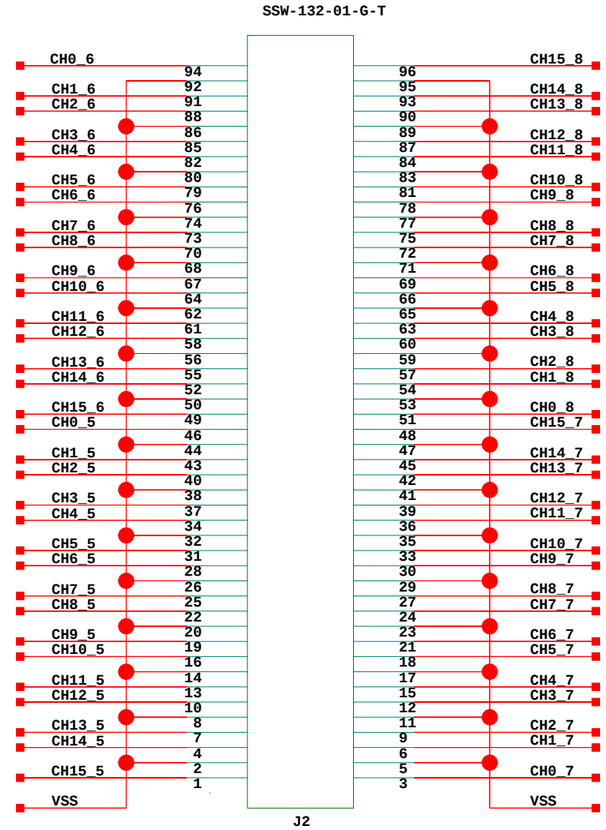

COMPANY	BROOKHAVEN NATIONAL LABORATORY		
TITLE	DUNE ANALOG MOTHER BOARD		
SIZE B	REV	SHEET 5 OF 18	
DRAWN	SHANSHAN GAO	DATE	28/05/2016:12:18

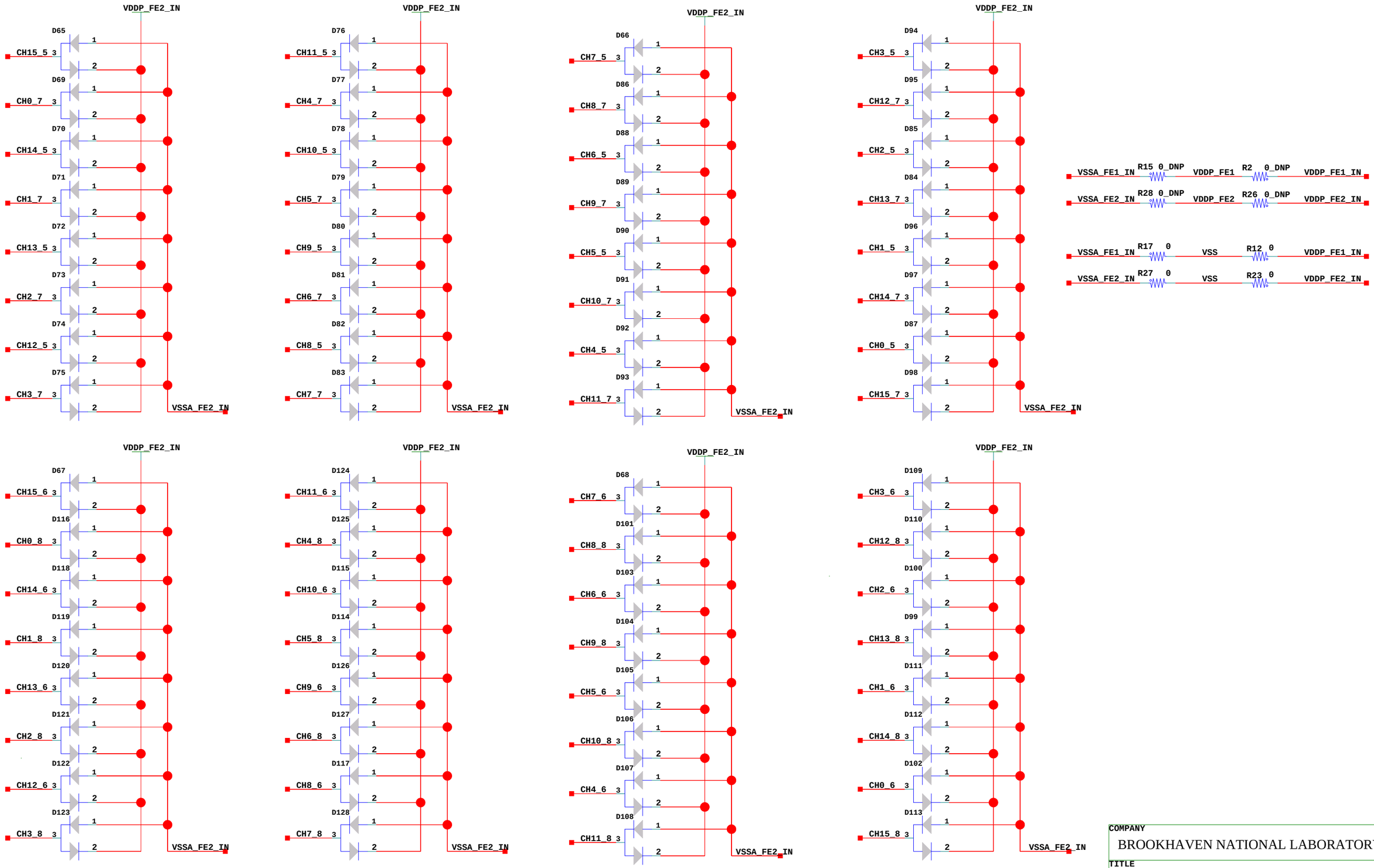

COMPANY
BROOKHAVEN NATIONAL LABORATORY

TITLE
DUNE ANALOG MOTHER BOARD

SIZE	B	REV	SHEET	6 OF 18	
DRAWN	SHANSHAN GAO		DATE	07/07/2016:18:04	

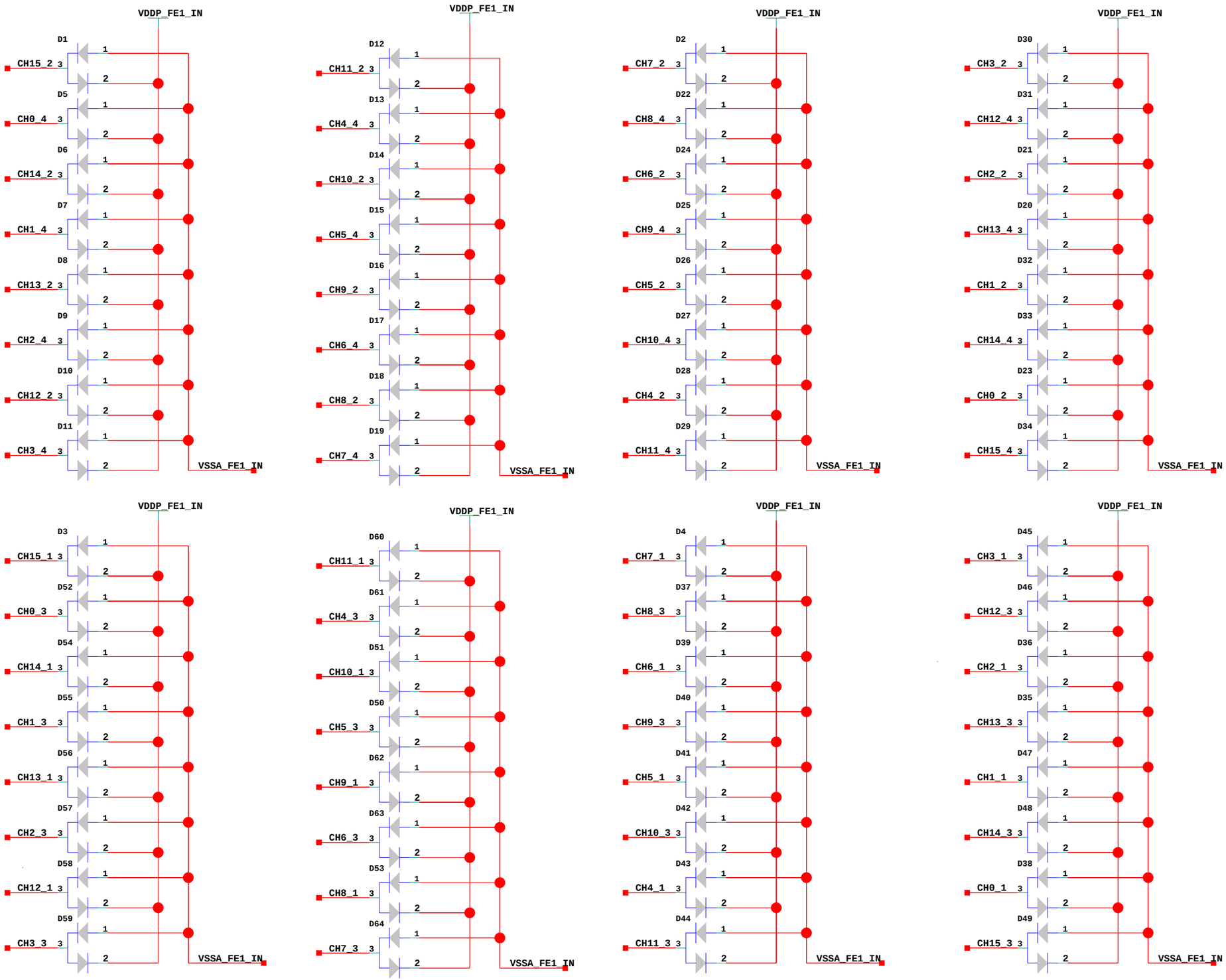

COMPANY
BROOKHAVEN NATIONAL LABORATORY

TITLE
DUNE ANALOG MOTHER BOARD

SIZE	B	REV	SHEET	7 OF 18	
DRAWN	SHANSHAN GAO		DATE	28/05/2016:12:53	

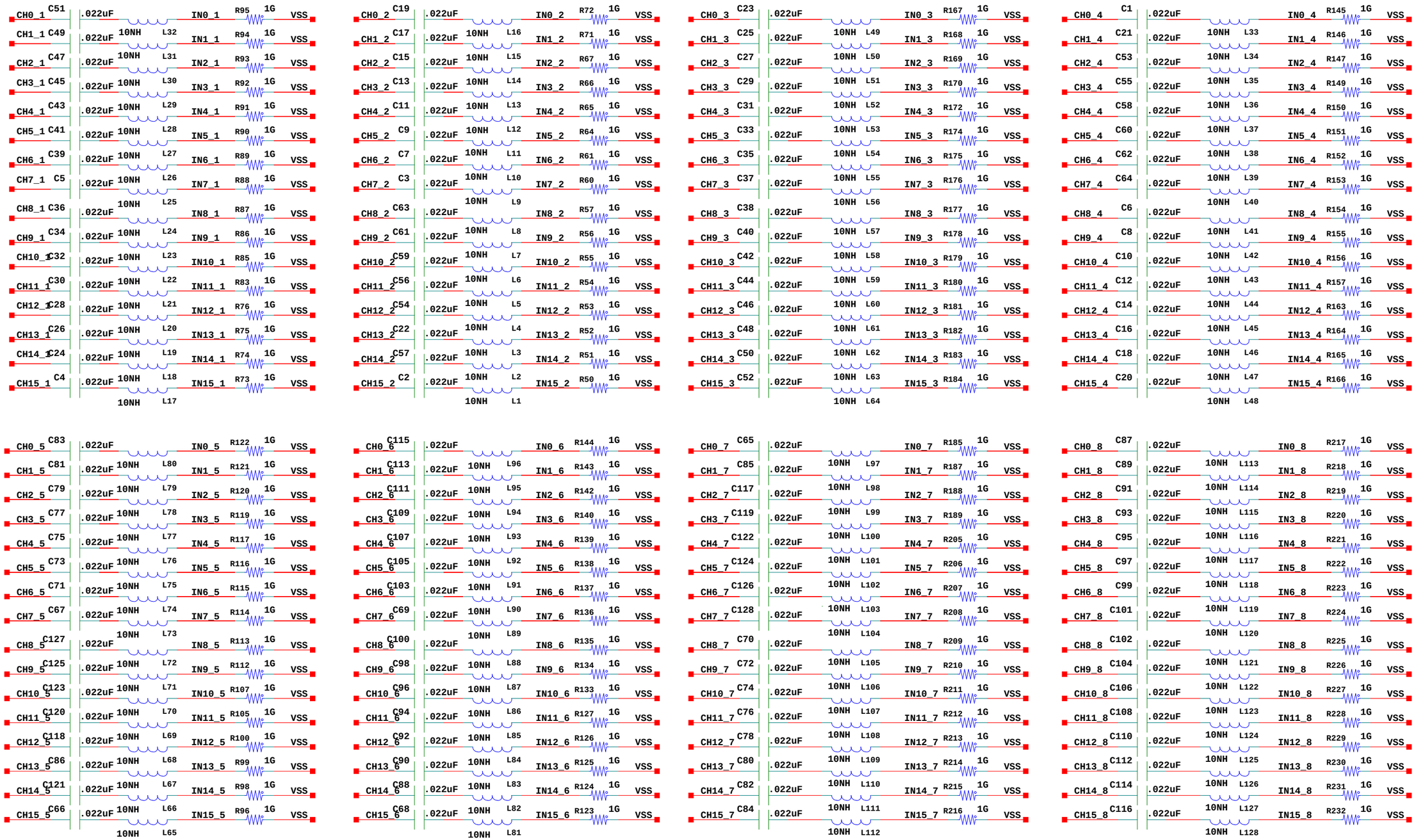

COMPANY	BROOKHAVEN NATIONAL LABORATORY
TITLE	DUNE ANALOG MOTHER BOARD
SIZE B REV	SHEET 8 OF 18
DRAWN SHANSHAN GAO	DATE 21/07/2016:16:32

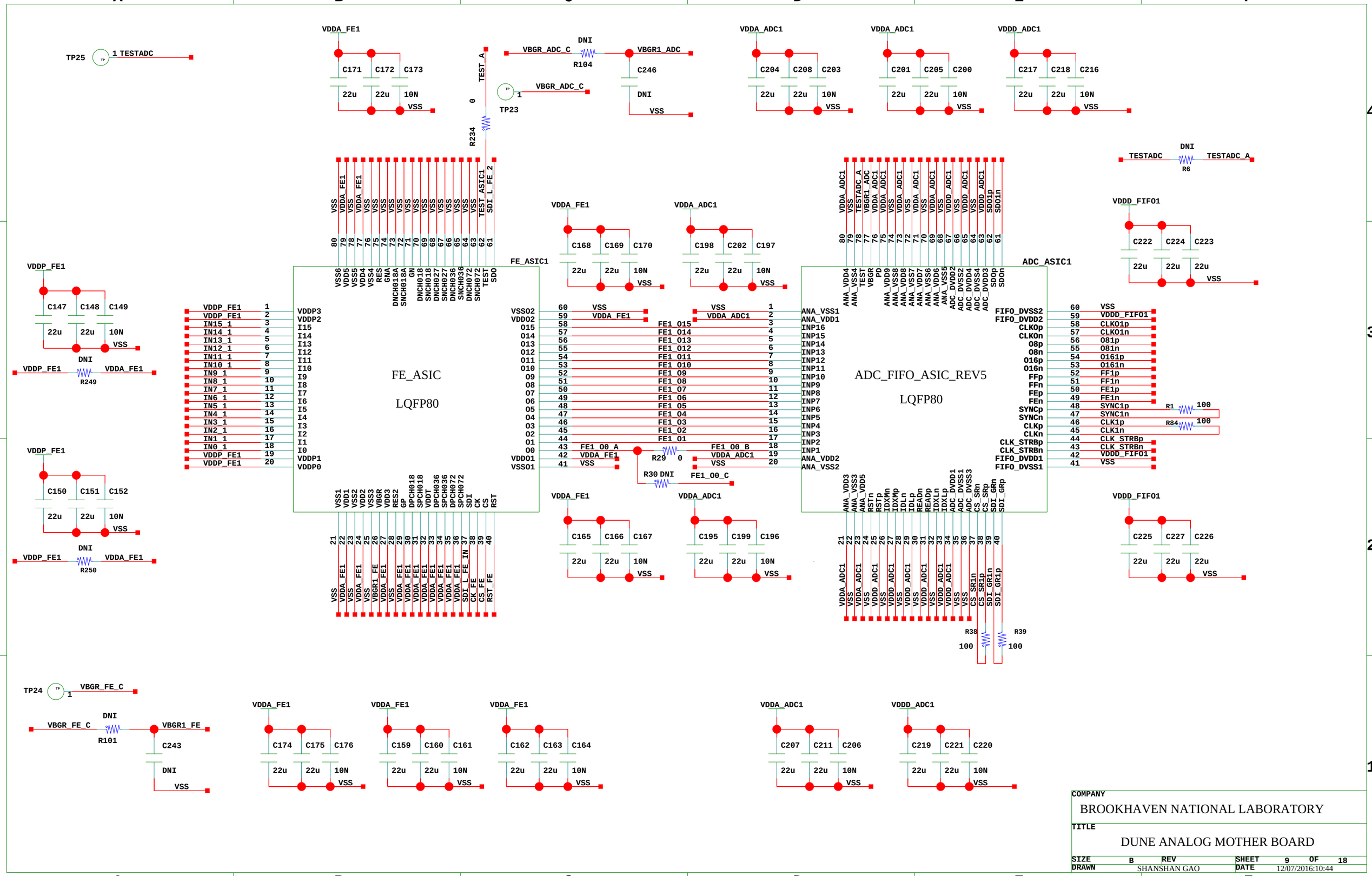

COMPANY
BROOKHAVEN NATIONAL LABORATORY

TITLE
DUNE ANALOG MOTHER BOARD

SIZE	B	REV	SHEET	9 OF 18	
DRAWN	SHANSHAN GAO		DATE	12/07/2016:10:44	

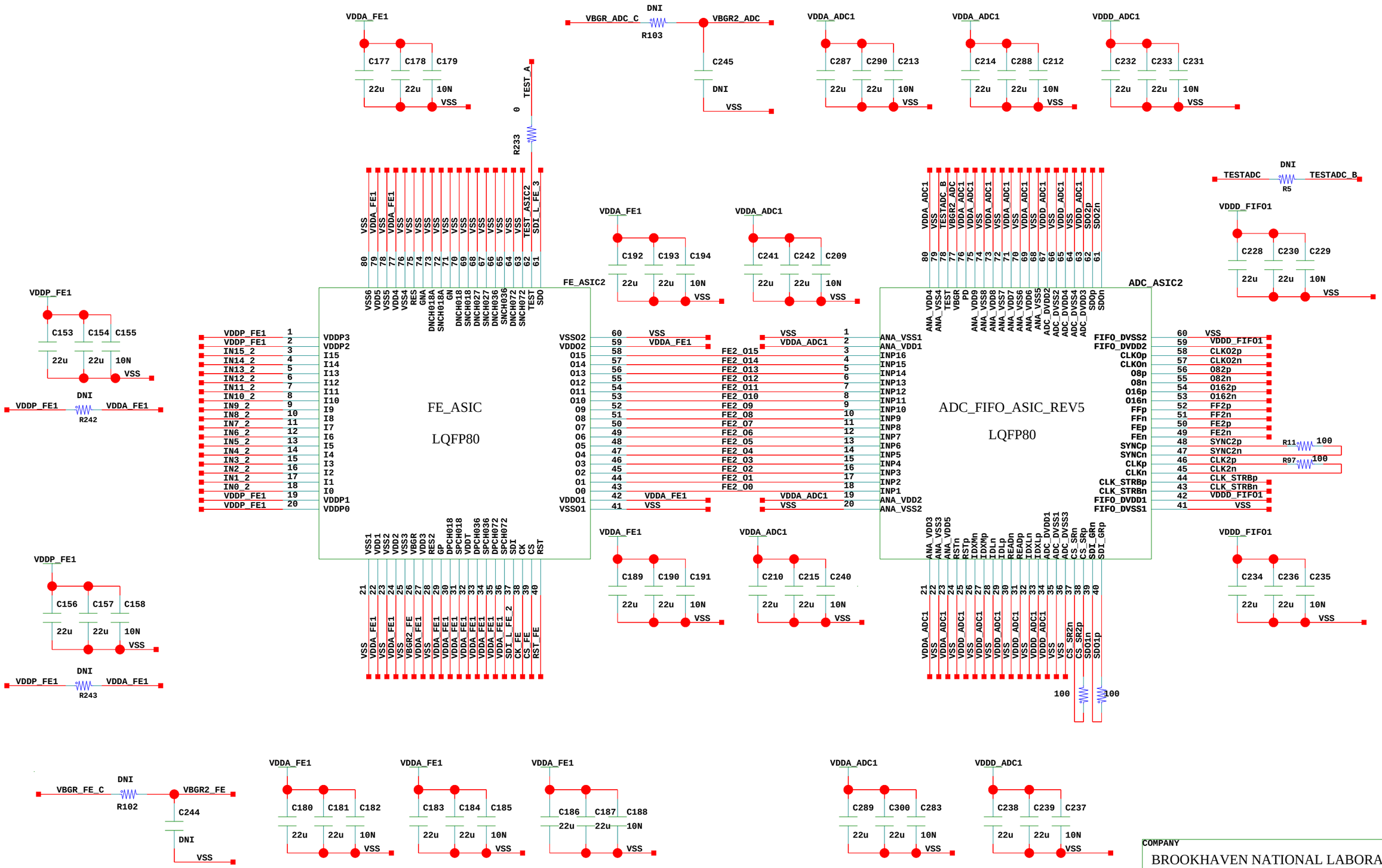

COMPANY	BROOKHAVEN NATIONAL LABORATORY
TITLE	DUNE ANALOG MOTHER BOARD
SIZE B	REV
SHEET 10 OF 18	
DRAWN SHANSHAN GAO	DATE 12/07/2016:10:44

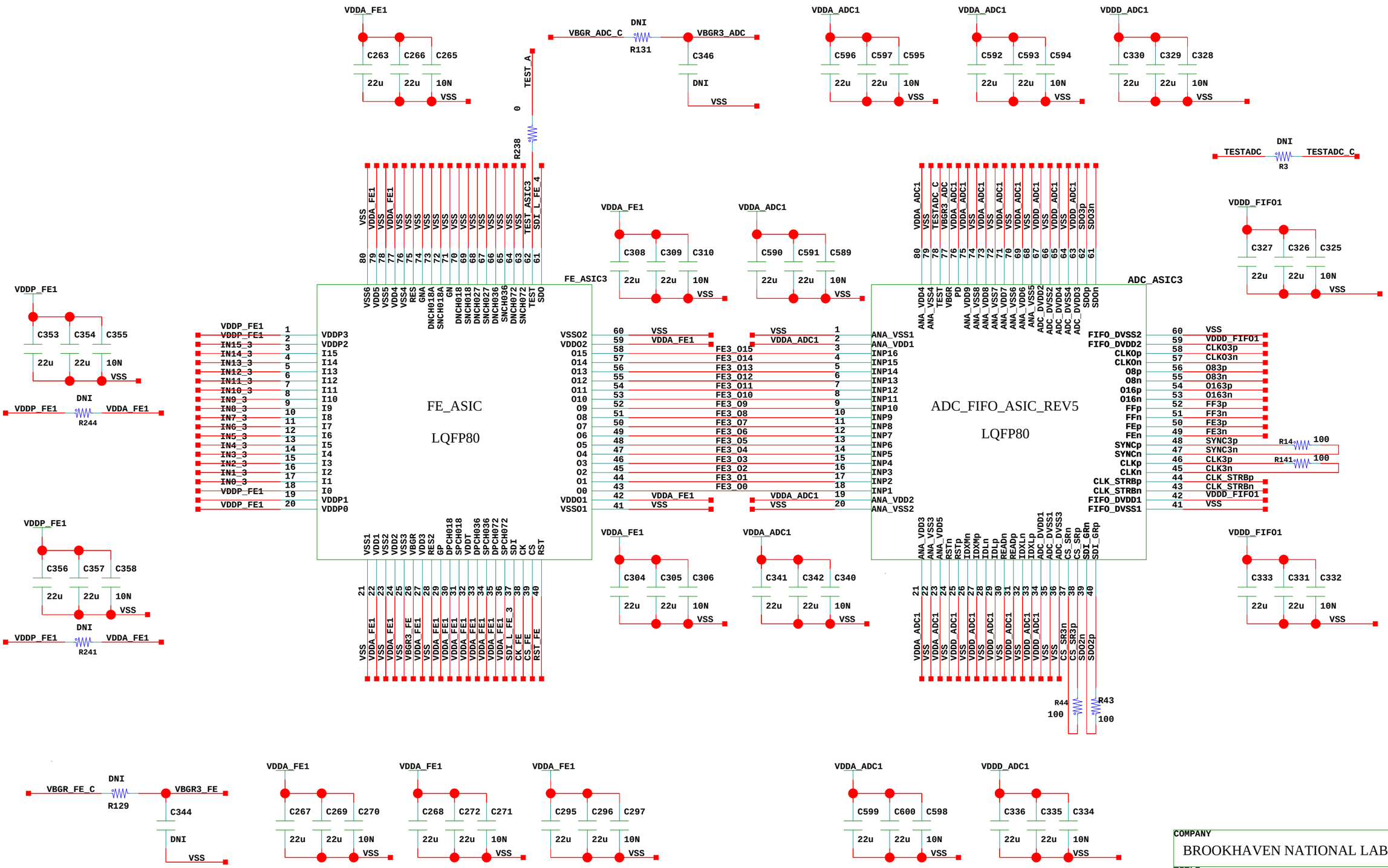

COMPANY	BROOKHAVEN NATIONAL LABORATORY
TITLE	DUNE ANALOG MOTHER BOARD
SIZE B	REV
SHEET 10 OF 18	
DRAWN SHANSHAN GAO	DATE 12/07/2016:10:45

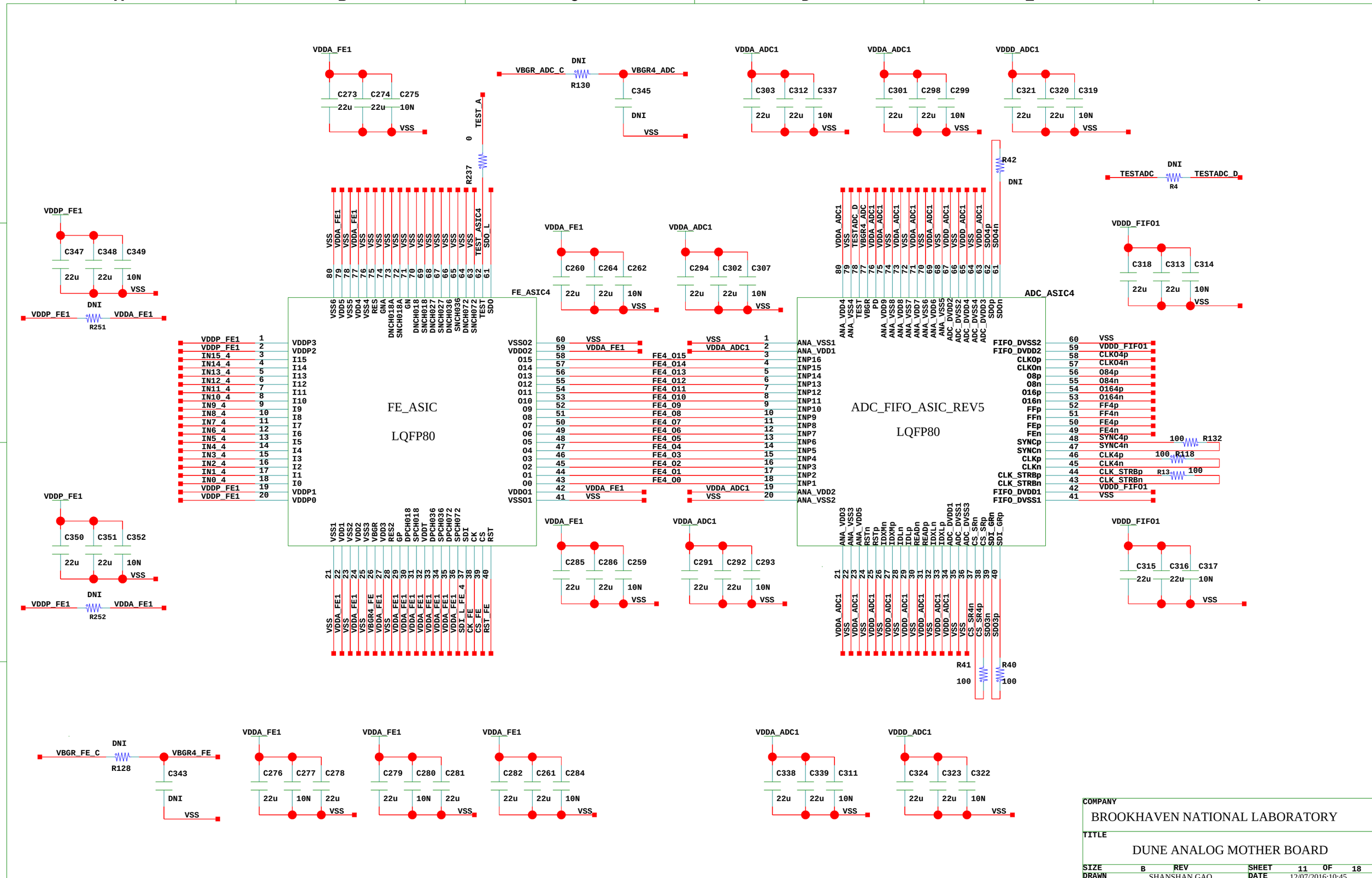

COMPANY
BROOKHAVEN NATIONAL LABORATORY

TITLE
DUNE ANALOG MOTHER BOARD

SIZE B	REV	SHEET 11 OF 18	
DRAWN SHANSHAN GAO		DATE 12/07/2016:10:45	

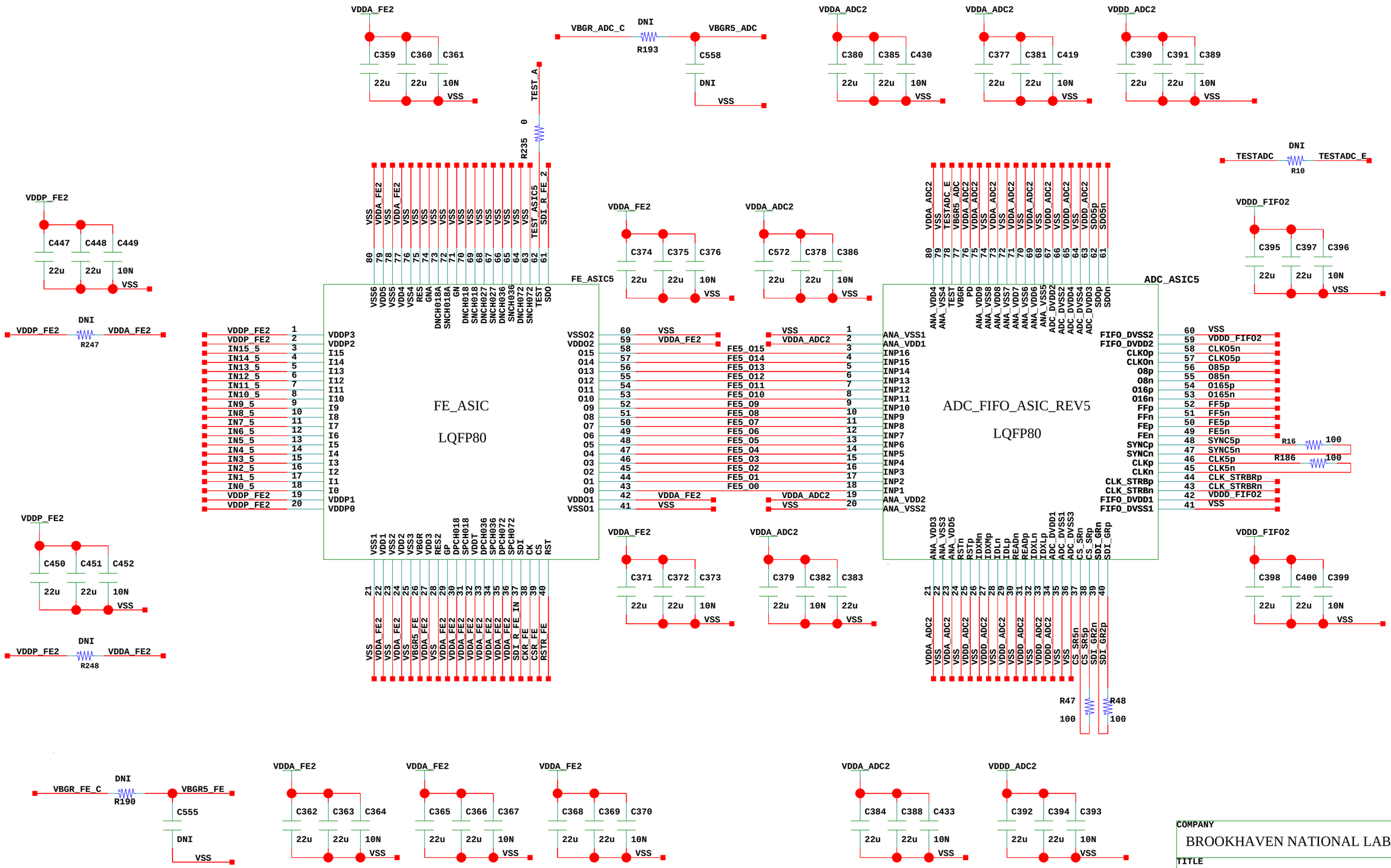

COMPANY
BROOKHAVEN NATIONAL LABORATORY

TITLE
DUNE ANALOG MOTHER BOARD

SIZE B	REV	SHEET 12	OF 18
DRAWN SHANSHAN GAO		DATE 12/07/2016:10:44	

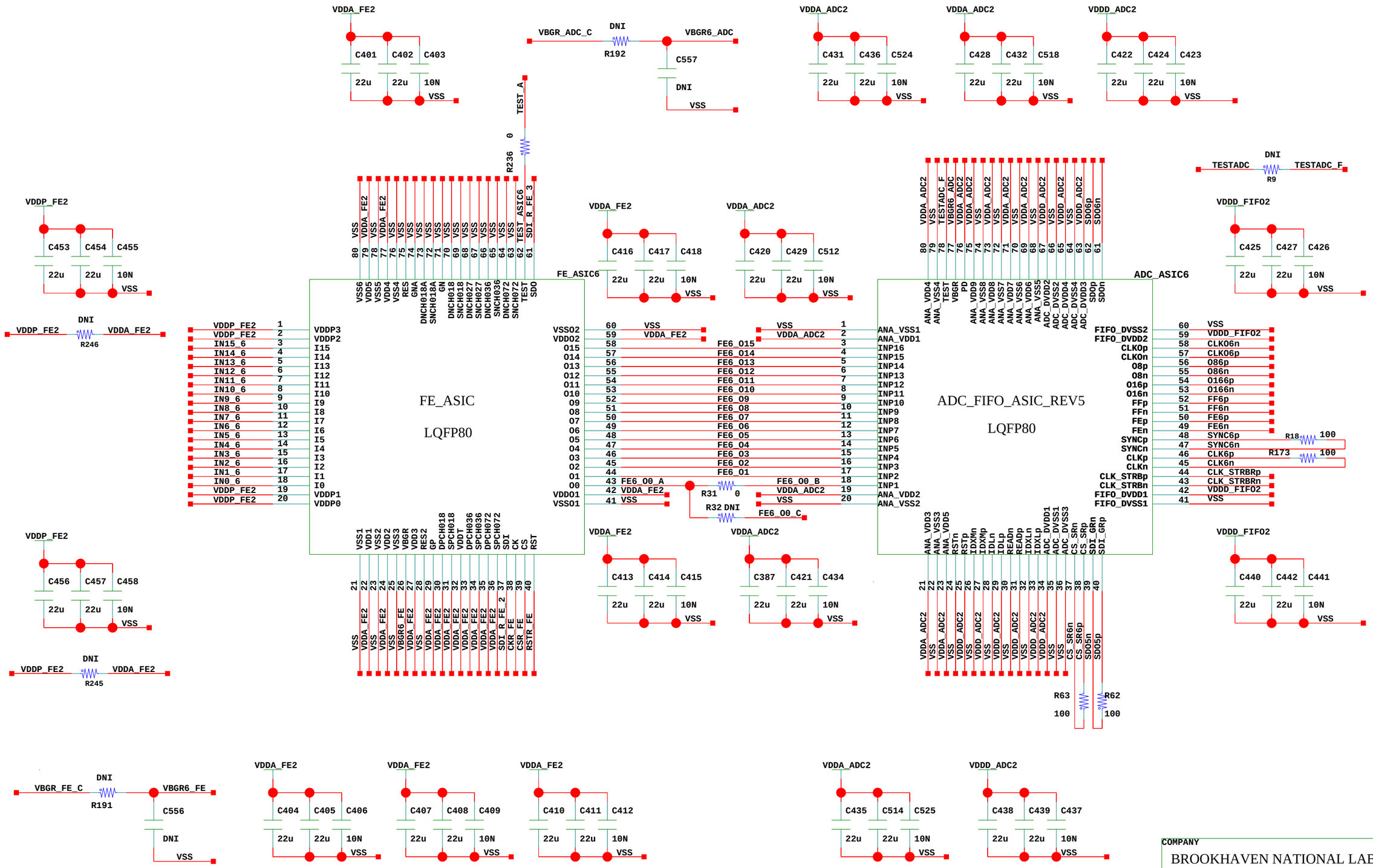

COMPANY
BROOKHAVEN NATIONAL LABORATORY

TITLE
DUNE ANALOG MOTHER BOARD

SIZE	B	REV	SHEET	13 OF 18	
DRAWN	SHANSHAN GAO		DATE	12/07/2016:10:45	

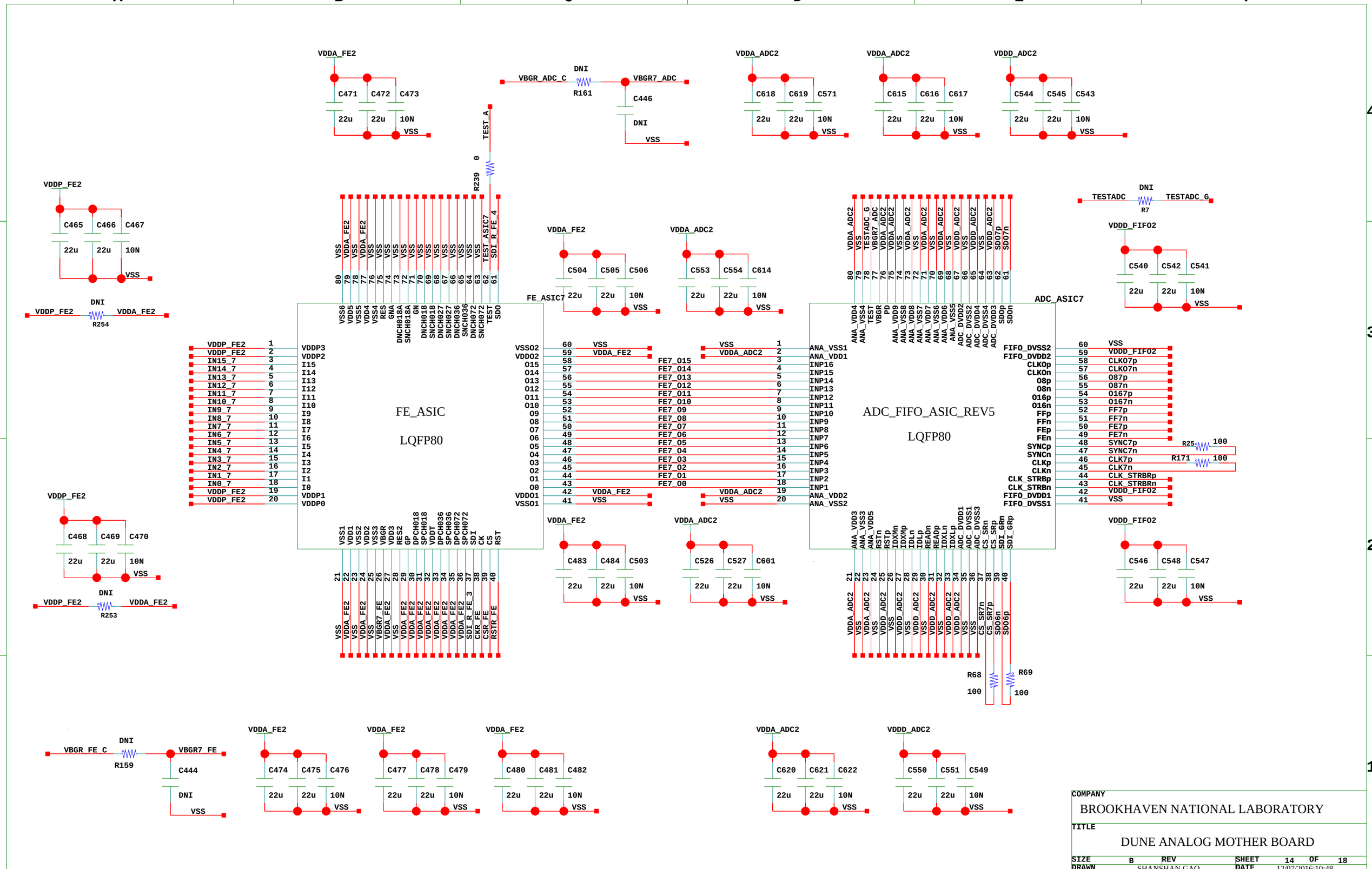
FE_ASIC
LQFP80
ADC_FIFO_ASIC_REV5
LQFP80
ADC_ASIC7
FE_ASIC7
VDDA_FE2
VDDA_ADC2
VDDD_ADC2
VDDD_FIFO2
VDDP_FE2
VSS
VBGR_ADC_C
VBGR7_ADC
VBGR_FE_C
VBGR7_FE
TESTADC
TESTADC_G
TEST_A
TEST_ASIC7
SDI_R_FE_4
SDI_R_FE_3
CKR_FE
CSR_FE
RSTR_FE
R161
R159
R254
R253
R239
R7
R25
R171
R68
R69
C471
C472
C473
C446
C444
C465
C466
C467
C468
C469
C470
C504
C505
C506
C553
C554
C614
C618
C619
C571
C615
C616
C617
C544
C545
C543
C540
C542
C541
C483
C484
C503
C526
C527
C601
C546
C548
C547
C474
C475
C476
C477
C478
C479
C480
C481
C482
C620
C621
C622
C550
C551
C549
22u
10N
DNI
0
100
COMPANY
BROOKHAVEN NATIONAL LABORATORY
TITLE
DUNE ANALOG MOTHER BOARD
SIZE B REV
SHEET 14 OF 18
DRAWN SHANSHAN GAO
DATE 12/07/2016:10:48

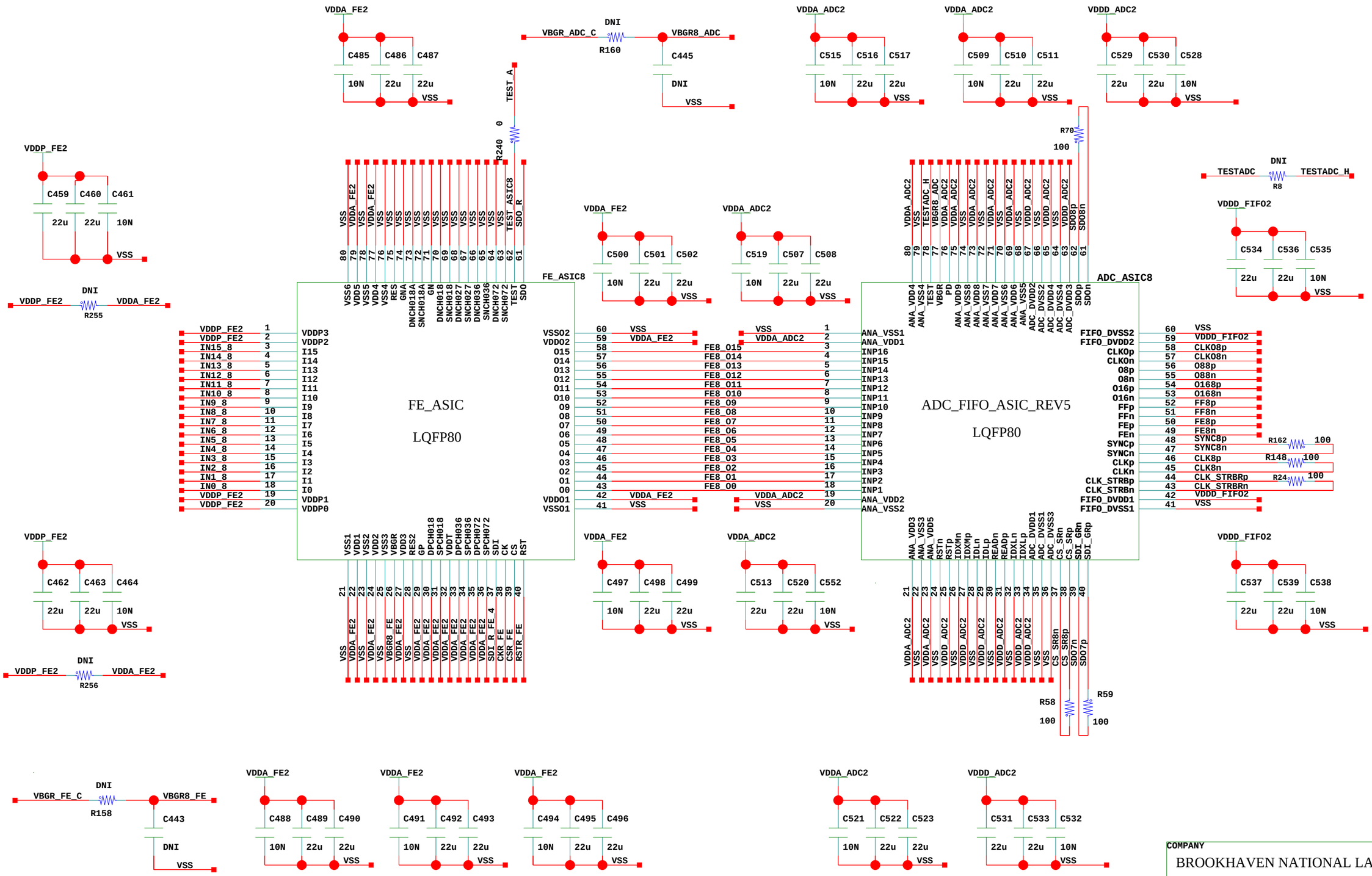

COMPANY
BROOKHAVEN NATIONAL LABORATORY

TITLE
DUNE ANALOG MOTHER BOARD

SIZE	B	REV	SHEET	15	OF 18
DRAWN	SHANSHAN GAO		DATE	12/07/2016:10:48	

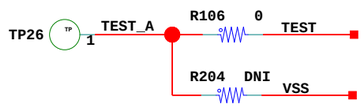

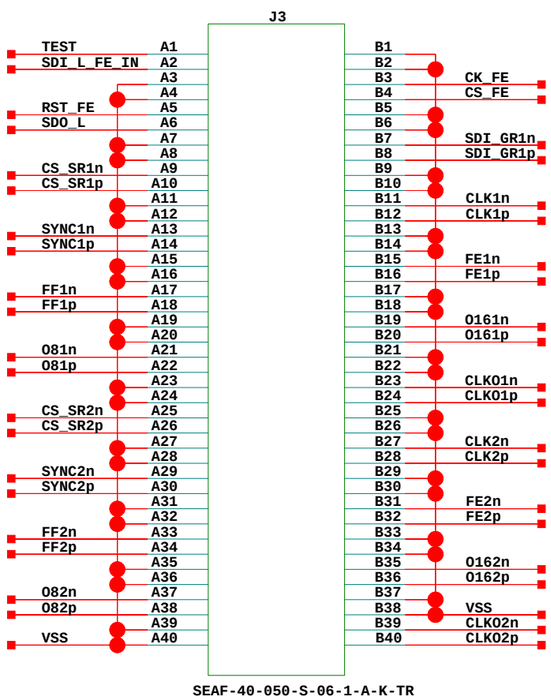

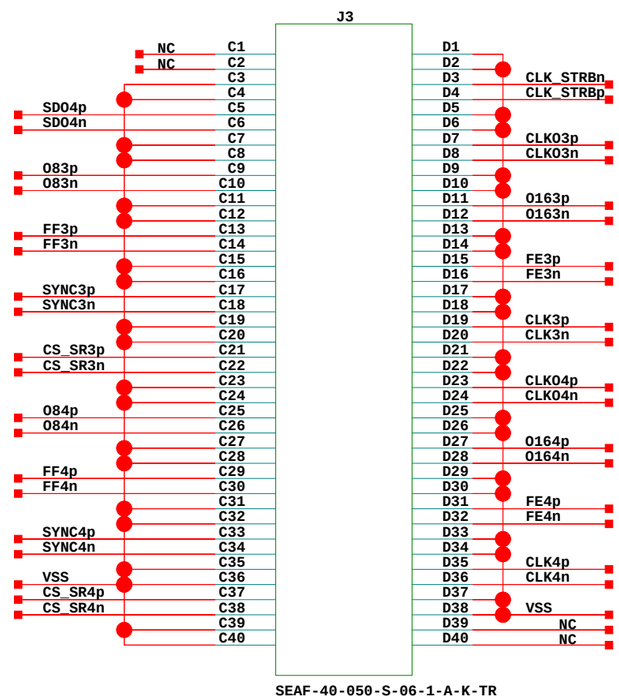

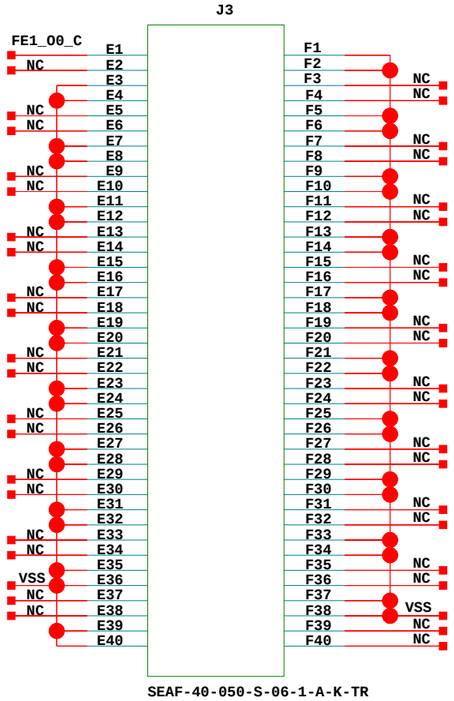

COMPANY	BROOKHAVEN NATIONAL LABORATORY
TITLE	DUNE ANALOG MOTHER BOARD
SIZE B REV	SHEET 16 OF 18
DRAWN SHANSHAN GAO	DATE 07/07/2016:18:36

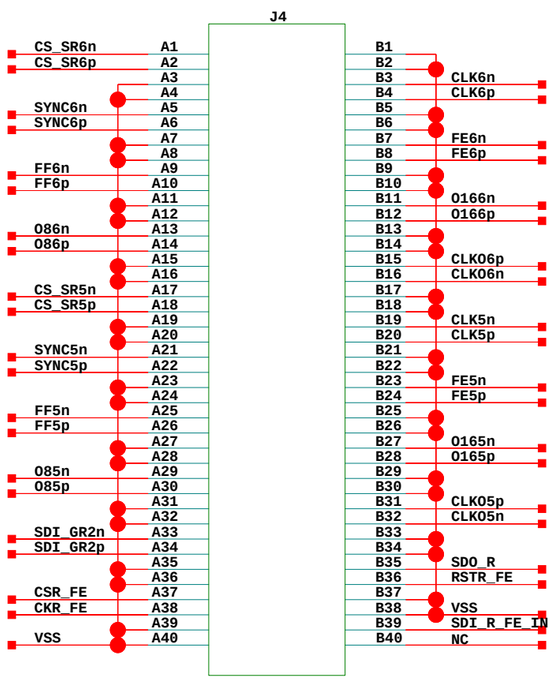

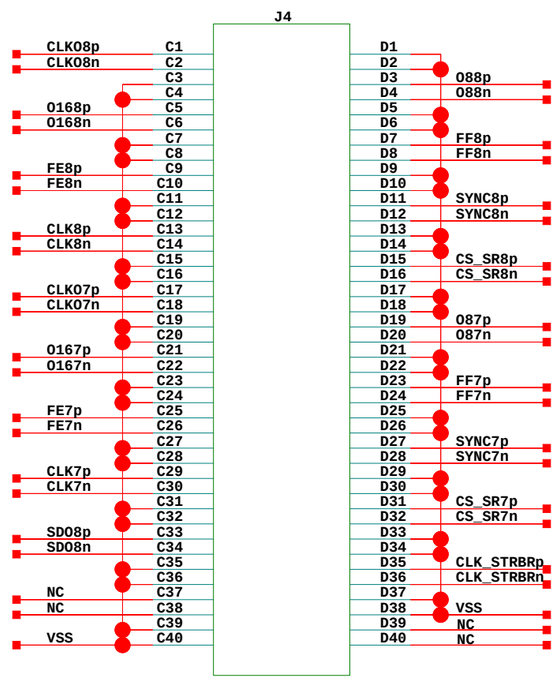

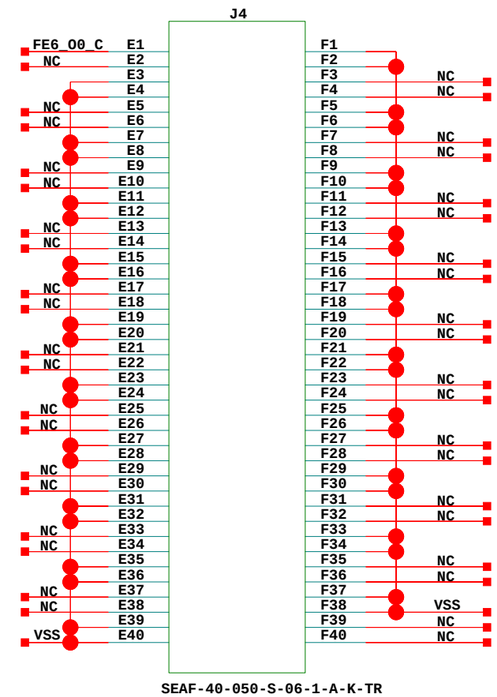

COMPANY	BROOKHAVEN NATIONAL LABORATORY		
TITLE	DUNE ANALOG MOTHER BOARD		
SIZE B	REV	SHEET 18 OF 18	
DRAWN	SHANSHAN GAO	DATE	28/05/2016:12:31