ProtoDUNE WIB

Top View - Flip Chip

Arria V - 5AGTFD3H3F35I3

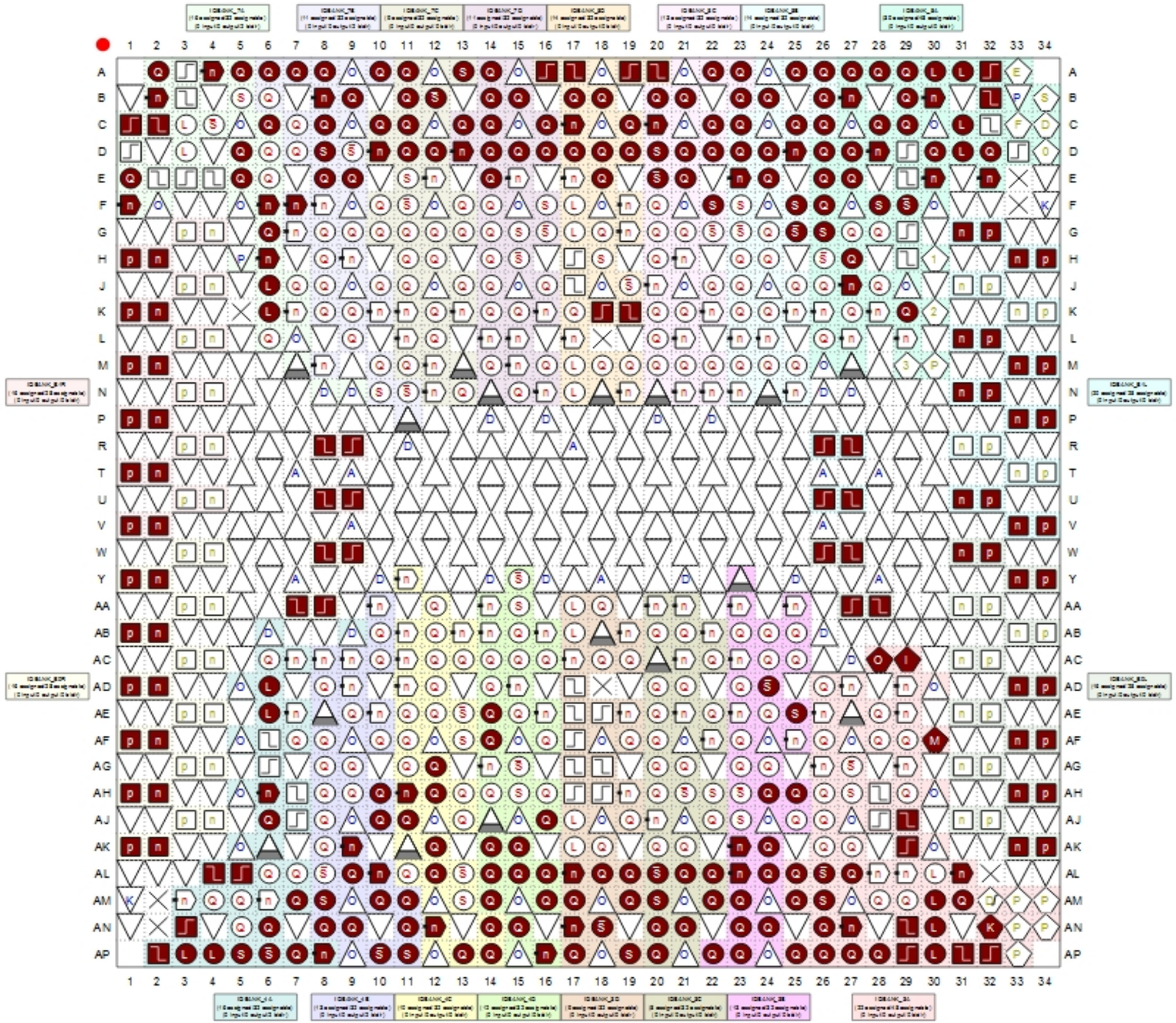

TITLE
WIB_FLANGE_IO
WIB_RX_EQ_BRD0
WIB_RX_EQ_BRD1
WIB_RX_EQ_BRD2
WIB_RX_EQ_BRD3
WIB_PWR_BACK_PLANE
WIB FEMB CLOCK FANOUT
WIB FEMB CMD FANOUT
WIB_CLK_GEN
WIB_SYS_CLK_PLL
WIB_RECOVERED_CLK_PLL
WIB_CLK_DATA_RECOV_SFP
WIB_CLK_DATA_RECOVERY
WIB_ETHERNET_SFP
WIB_QSFP+
WIB_FEMB_PWR_CNTL
WIB_BRD0_PWR
WIB_BRD1_PWR
WIB_BRD2_PWR
WIB_BRD3_PWR
WIB_FE_ASIC_PWR_BRD0-3
WIB_BIAS_BRD0-3
WIB EXT CALB INPUT
WIB INT CAL DAC
WIB_CAL_DRIVERS
WIB_MISC_IO
WIB_FPGA_CONFIG
WIB_DC_DC_PWR
WIB_LINEAR_PWR_1
WIB_LINEAR_PWR_2
WIB_FPGA_PWR
WIB_FPGA_GND
WIB_FPGA_DECOUPLING
WIB_FPGA_EXTRA_IO

BROOKHAVEN NATIONAL LABORATORY
INSTRUMENTATION DIVISION

TITLE
TITLE

SIZE B	BOARD : ProtoDUNE_WIB
DRAWN : Jack Fried	DATE : 28/02/2017:17:30

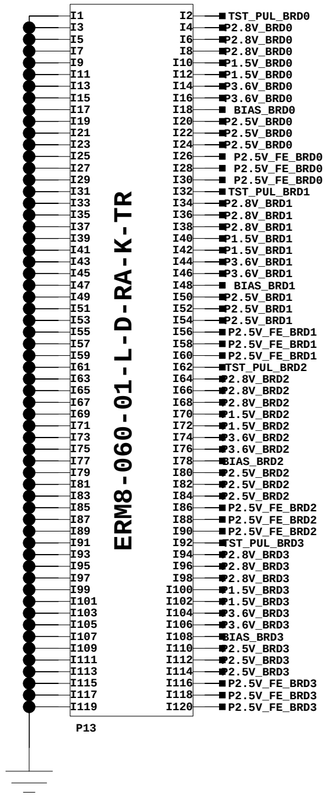

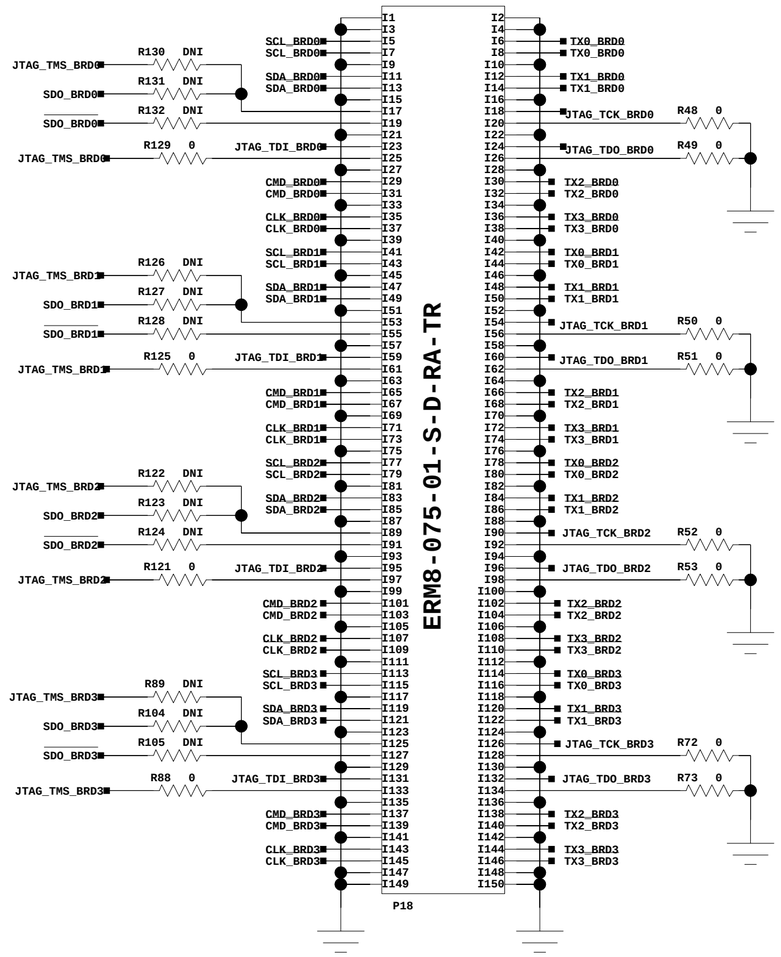

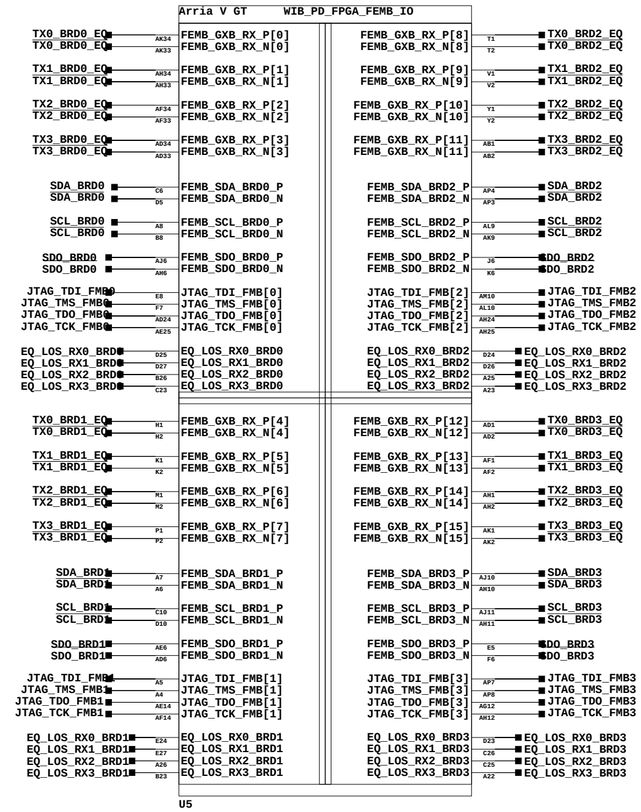

FRONT PANNEL

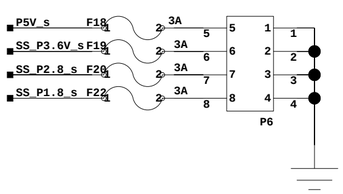

NEXT TO FPGA

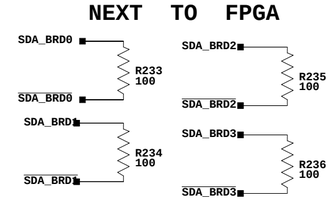

Ask about placment

FRONT PANNEL

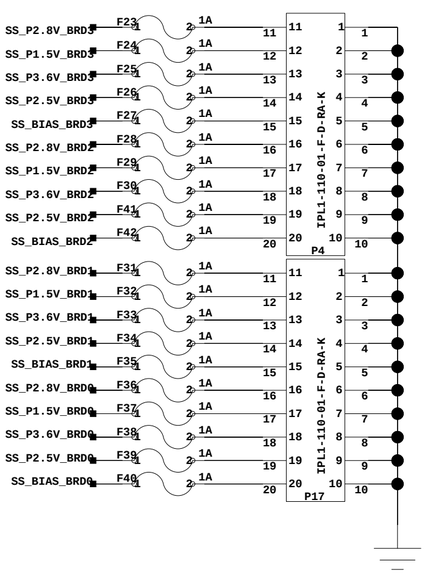

FRONT PANNEL

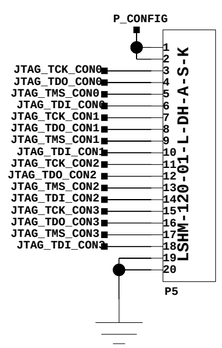

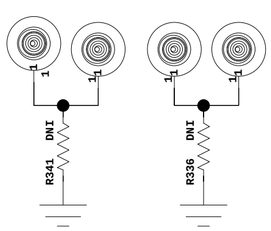

PAIRS

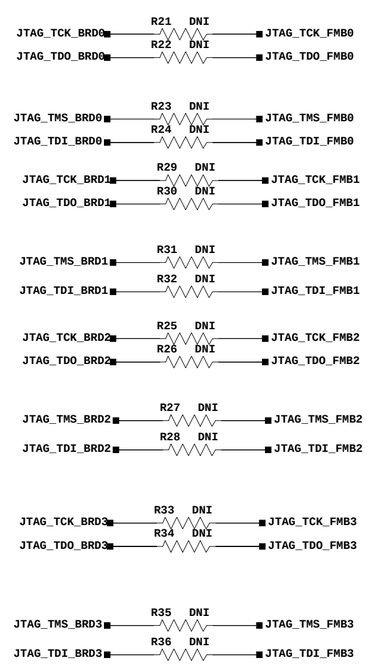

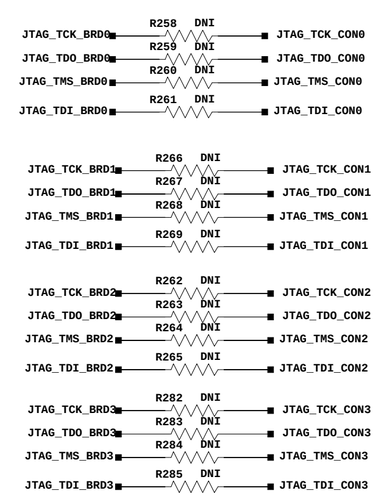

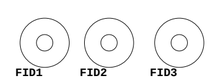

BROOKHAVEN NATIONAL LABORATORY
INSTRUMENTATION DIVISION

WIB_FLANGE_IO

Date: 28/02/2017:17:30

DRAWN BY: Jack Fried

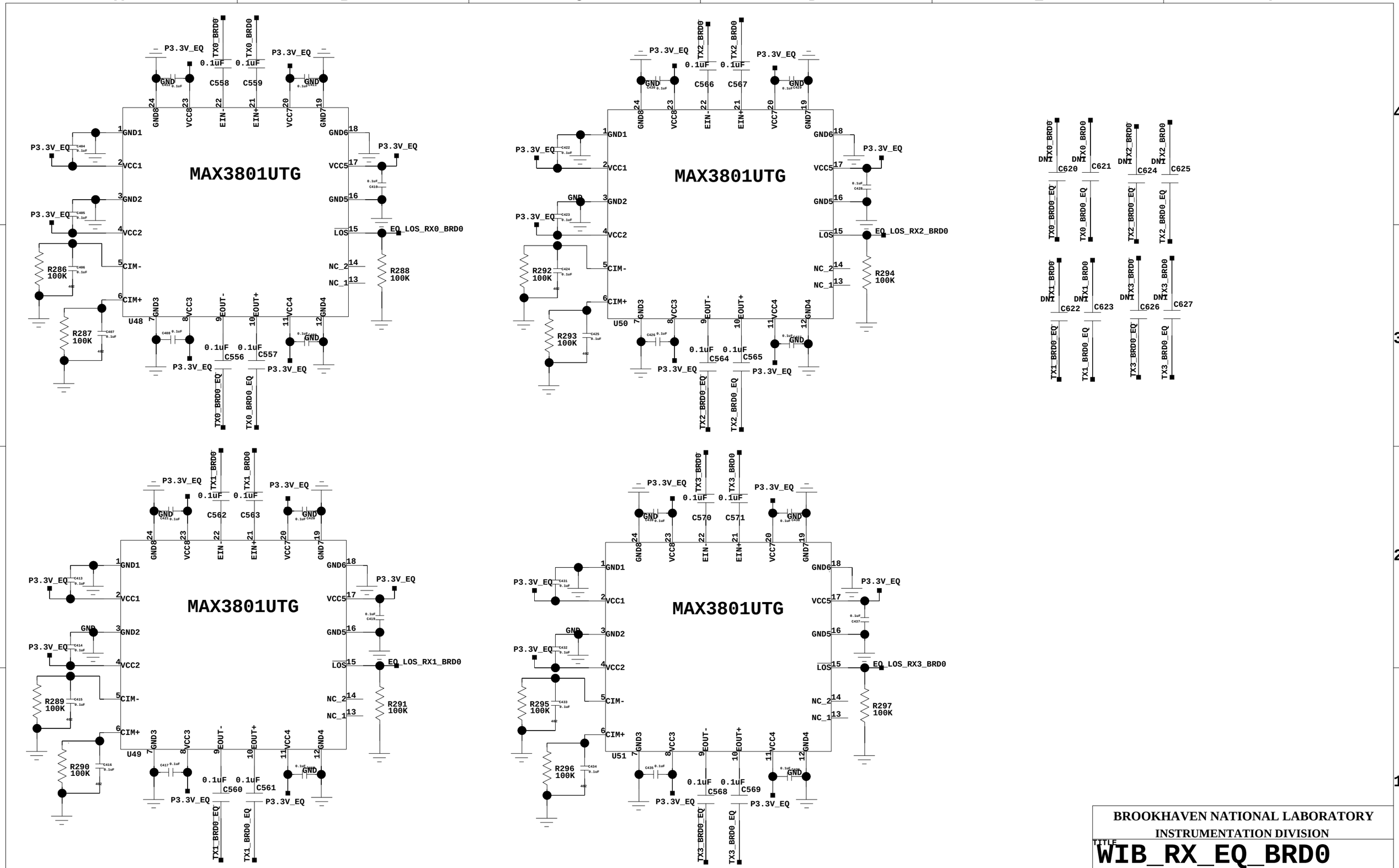

BROOKHAVEN NATIONAL LABORATORY
INSTRUMENTATION DIVISION

TITLE
WIB_RX_EQ_BRD0

SIZE B	BOARD : ProtoDUNE_WIB
DRAWN : Jack Fried	DATE : 28/02/2017:17:30

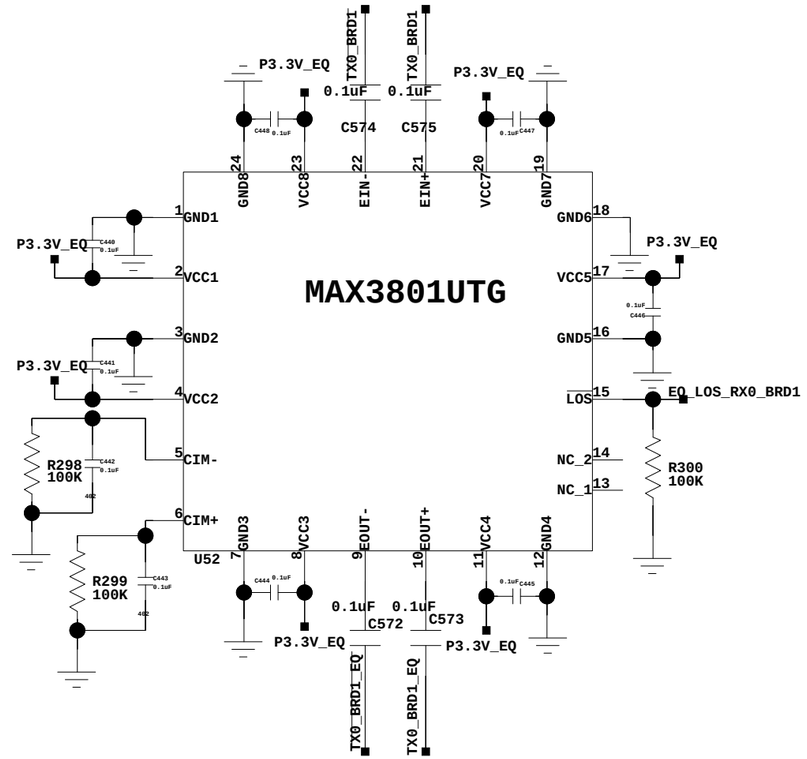

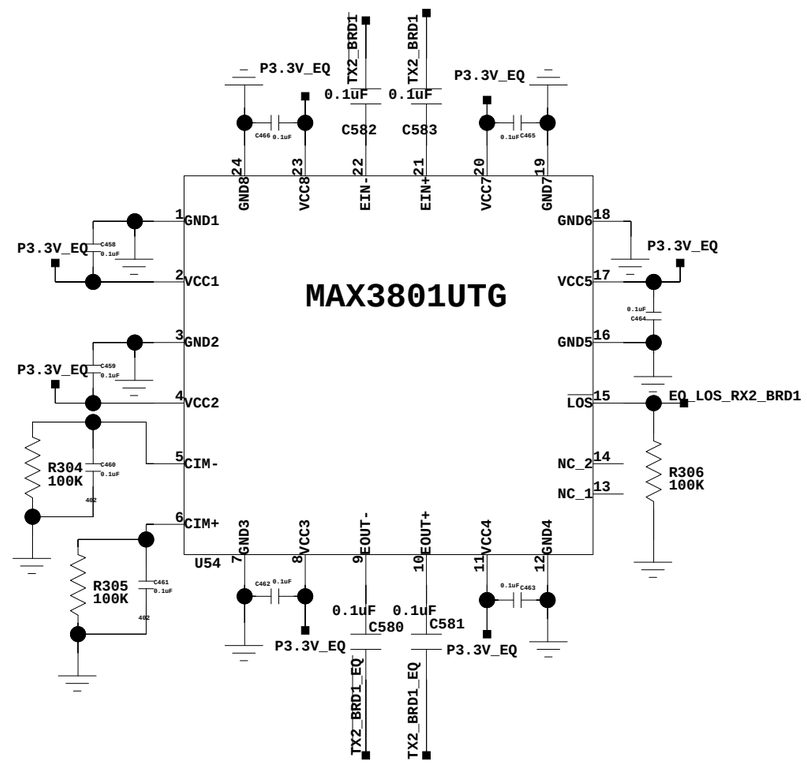

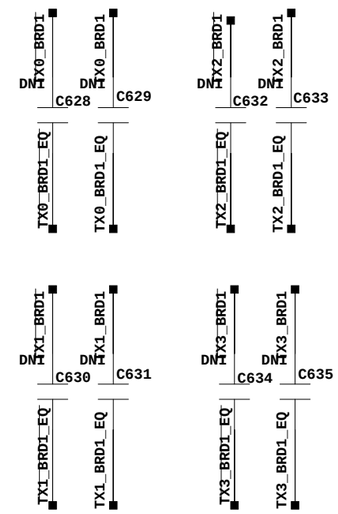

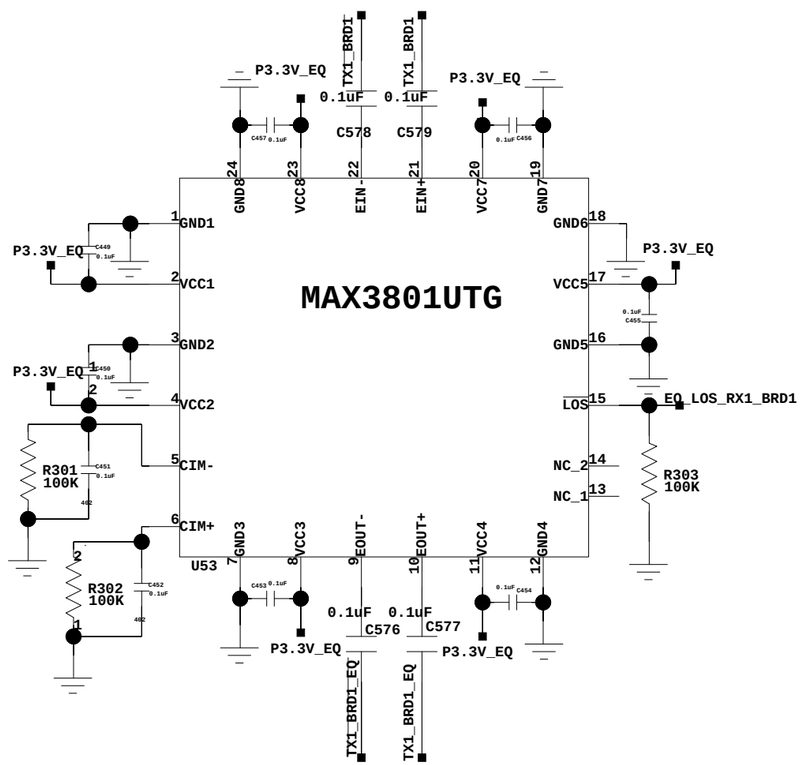

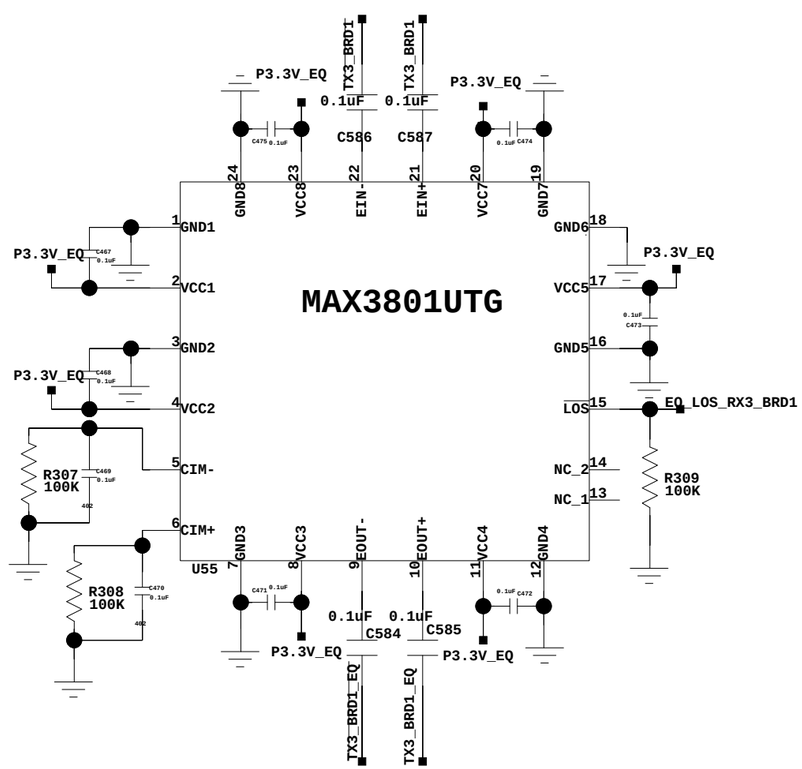

BROOKHAVEN NATIONAL LABORATORY
INSTRUMENTATION DIVISION

TITLE
WIB_RX_EQ_BRD1

SIZE B	BOARD : ProtoDUNE_WIB
DRAWN : Jack Fried	DATE : 28/02/2017:17:30

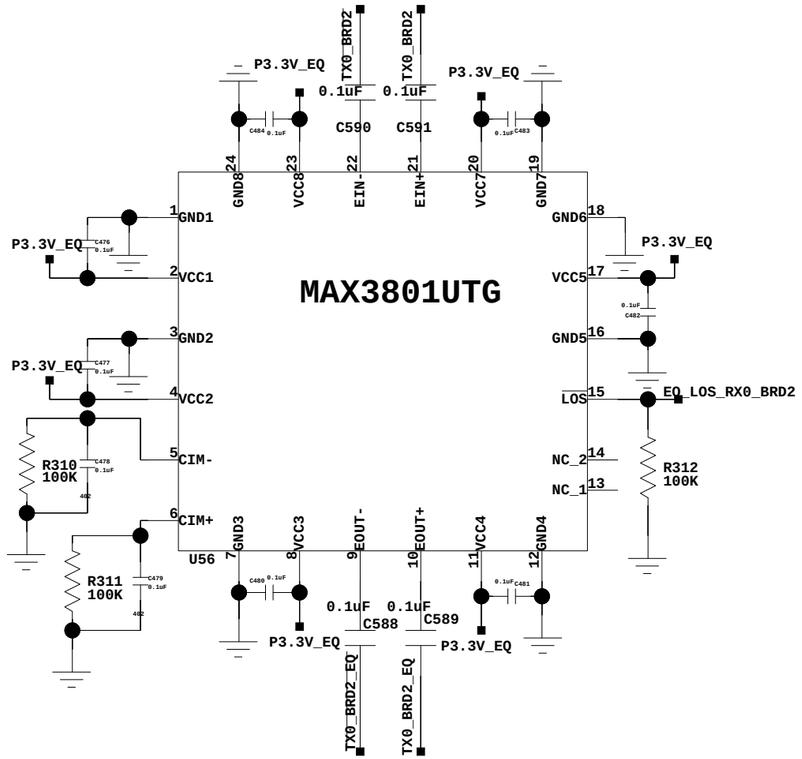

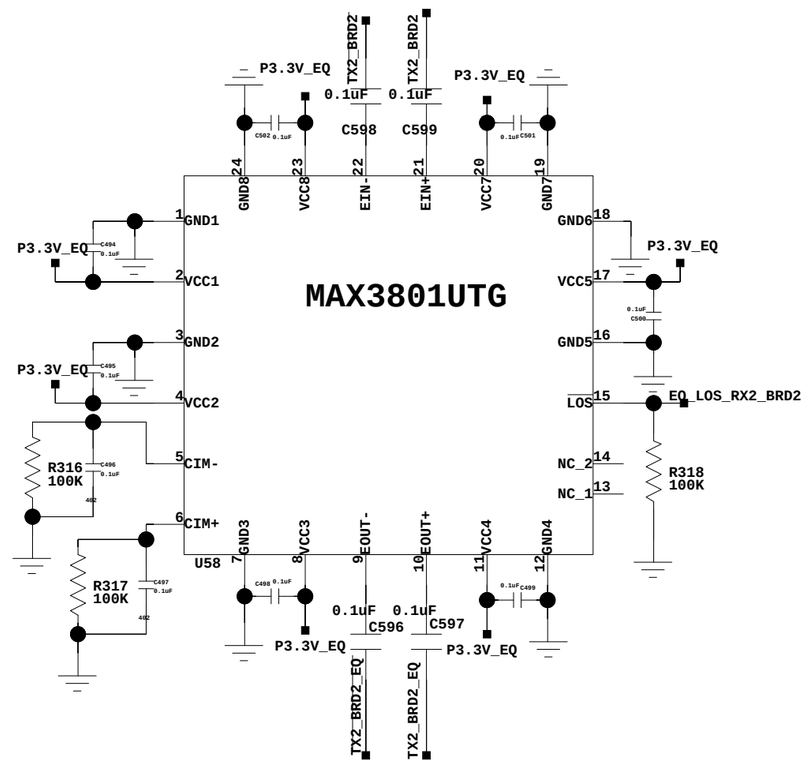

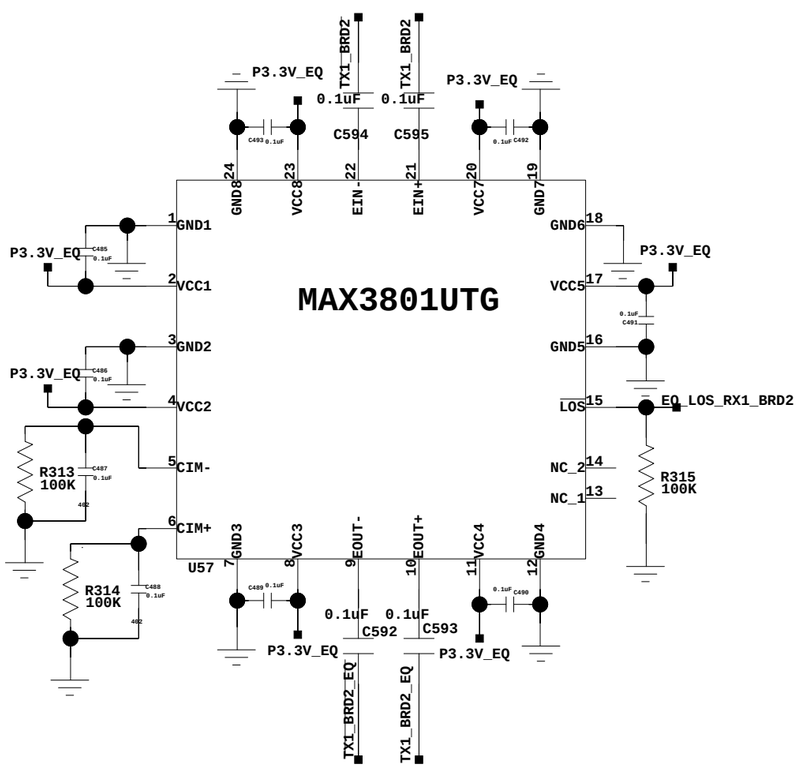

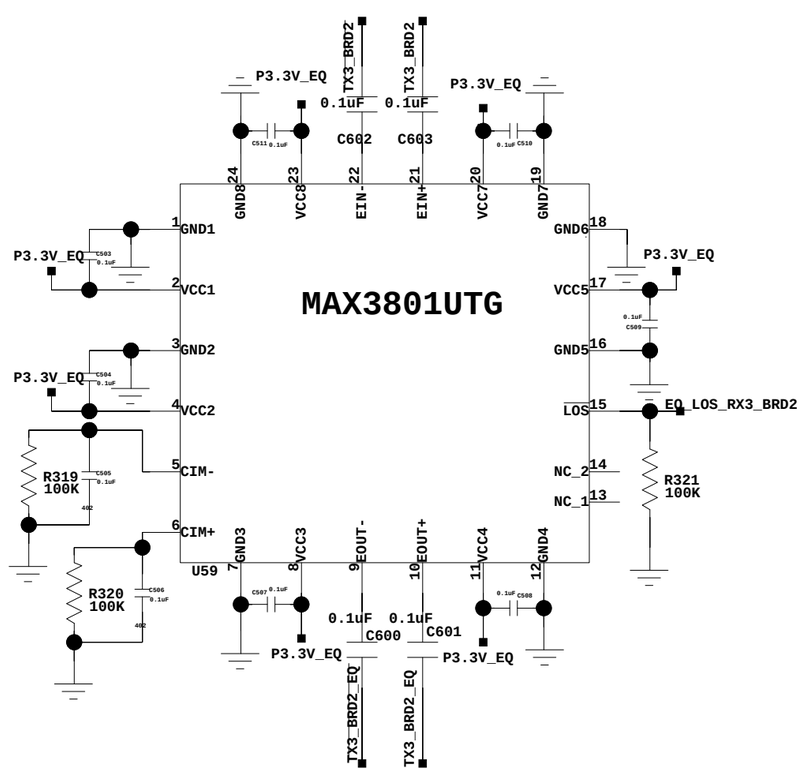

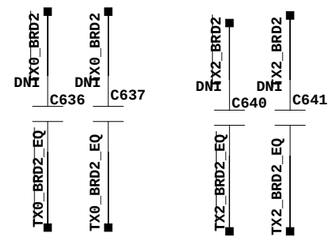

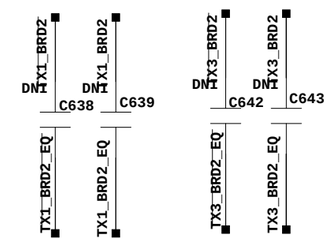

BROOKHAVEN NATIONAL LABORATORY
INSTRUMENTATION DIVISION

TITLE
WIB_RX_EQ_BRD2

SIZE B	BOARD : ProtoDUNE_WIB
DRAWN : Jack Fried	DATE : 28/02/2017:17:30

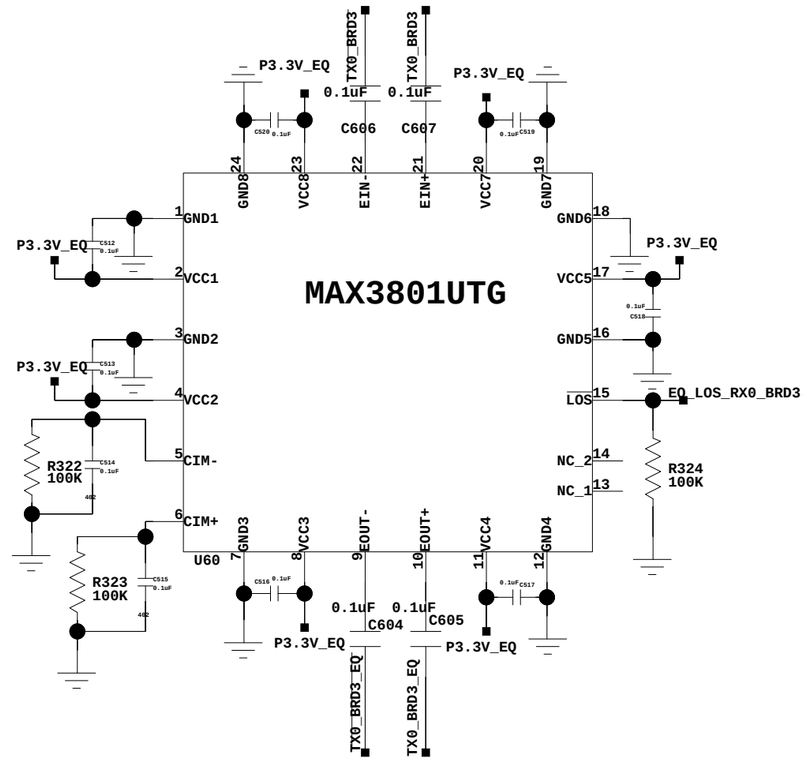

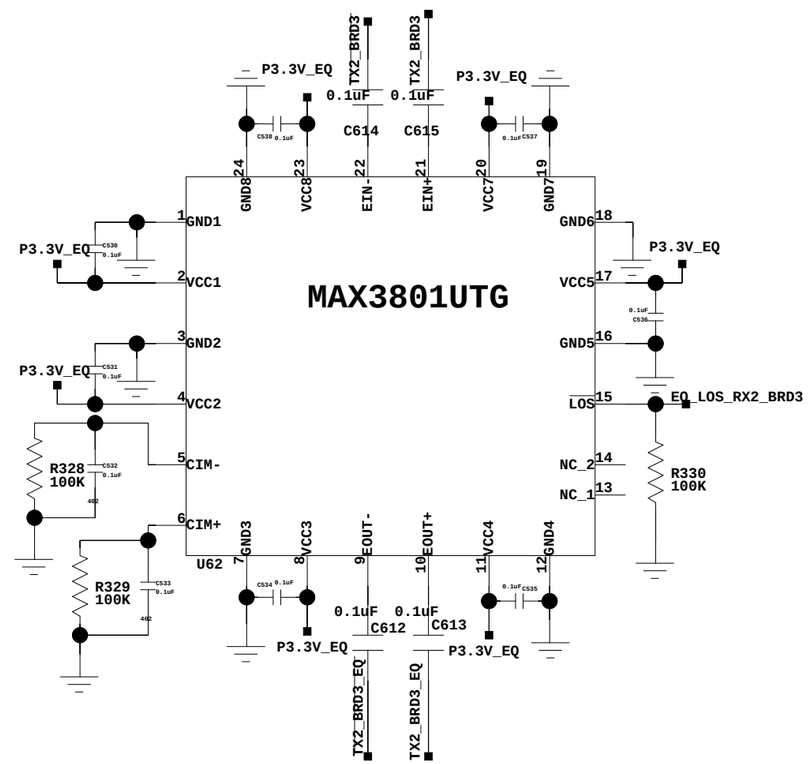

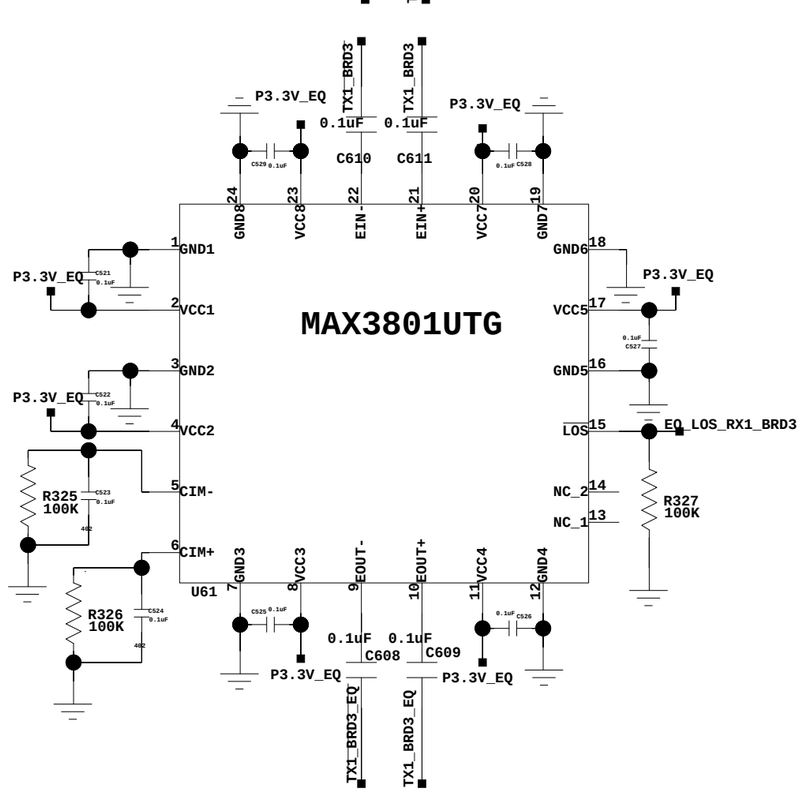

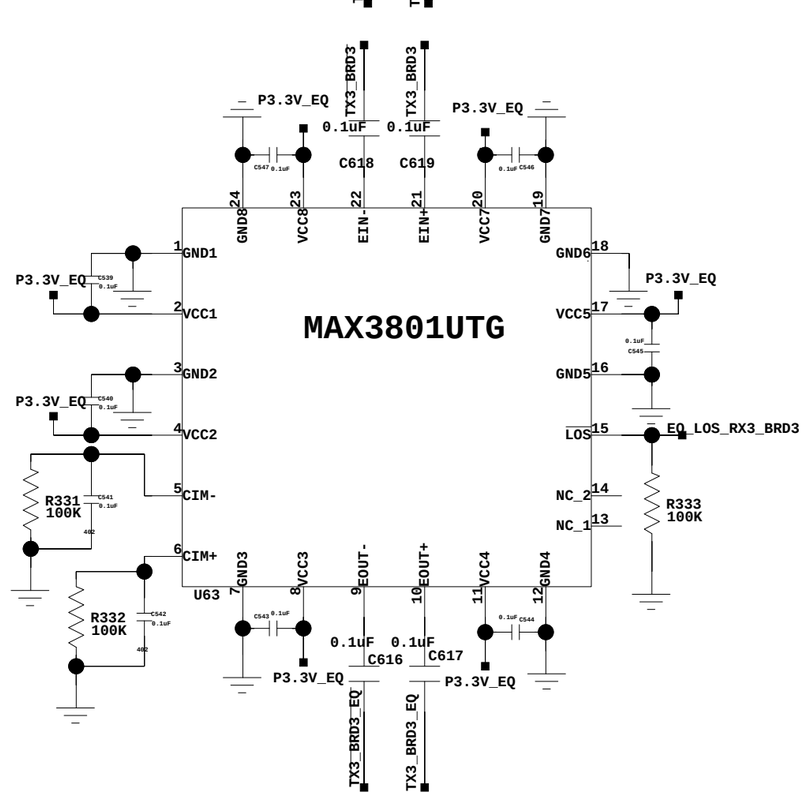

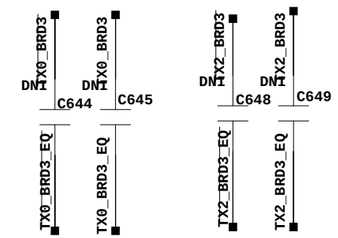

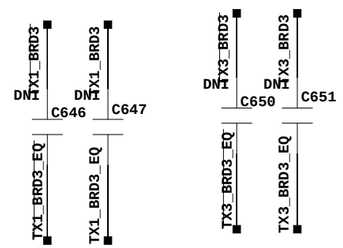

BROOKHAVEN NATIONAL LABORATORY
INSTRUMENTATION DIVISION

TITLE
WIB_RX_EQ_BRD3

SIZE B	BOARD : ProtoDUNE_WIB
DRAWN : Jack Fried	DATE : 28/02/2017:17:30

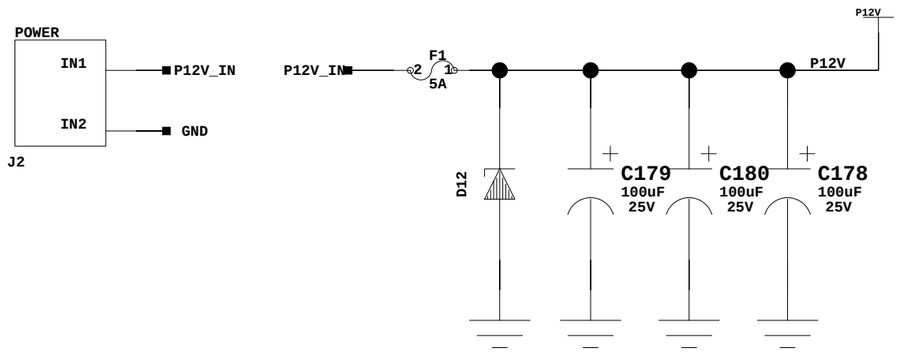

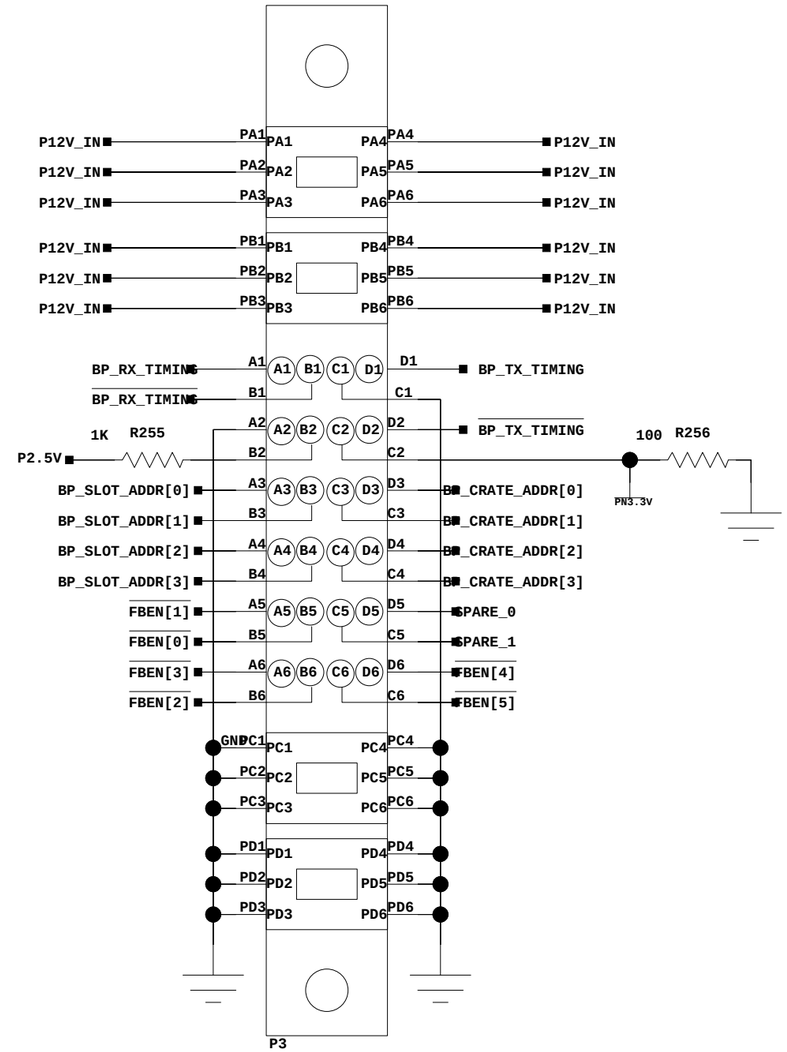

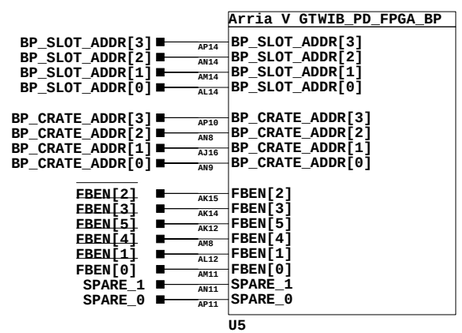

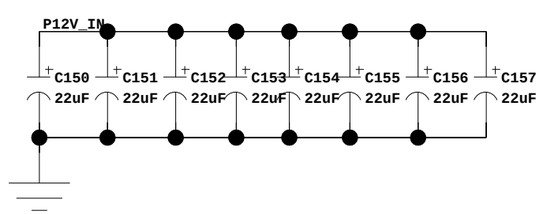

BROOKHAVEN NATIONAL LABORATORY
INSTRUMENTATION DIVISION

TITLE
WIB_PWR_BACK_PLANE

SIZE B	BOARD : ProtoDUNE_WIB
DRAWN : Jack Fried	DATE : 28/02/2017:17:30

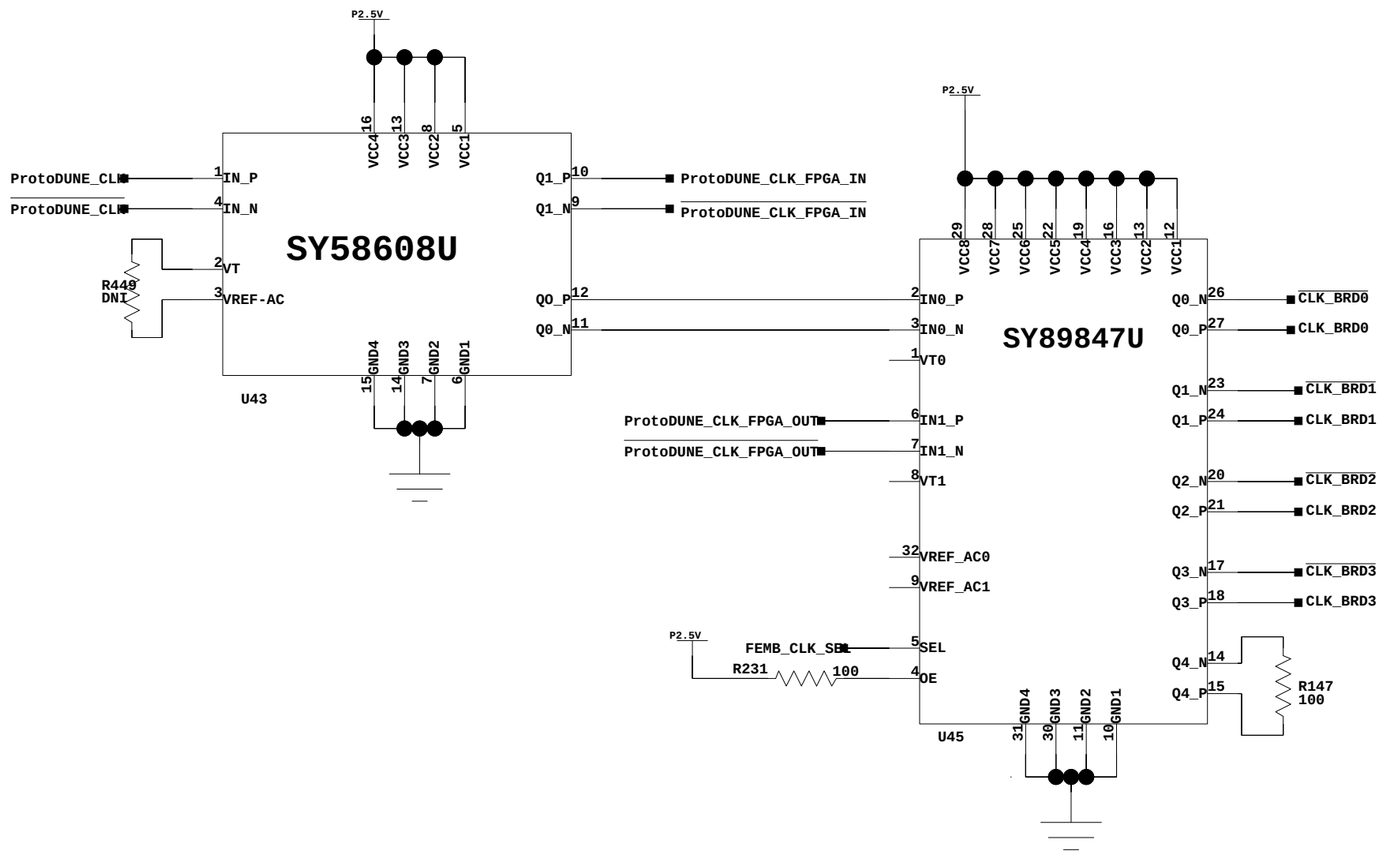

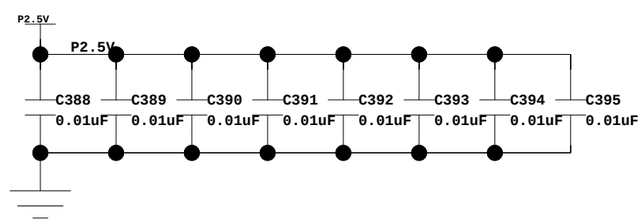

BROOKHAVEN NATIONAL LABORATORY
INSTRUMENTATION DIVISION

TITLE
WIB FEMB CLOCK FANOUT

SIZE B	BOARD : ProtoDUNE_WIB
DRAWN : Jack Fried	DATE : 28/02/2017:17:30

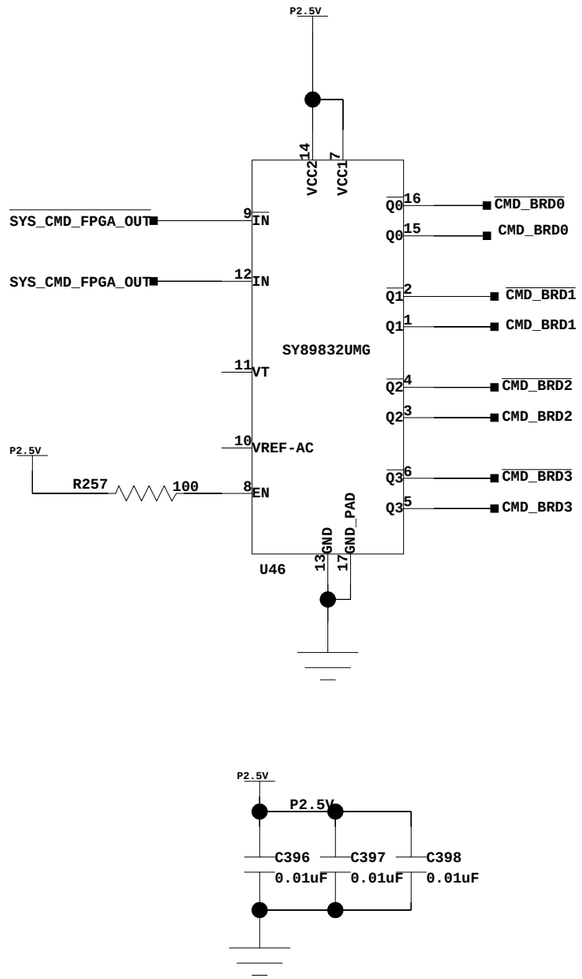

BROOKHAVEN NATIONAL LABORATORY
INSTRUMENTATION DIVISION

TITLE
WIB FEMB CMD FANOUT

SIZE B	BOARD : ProtoDUNE_WIB
DRAWN : Jack Fried	DATE : 28/02/2017:17:30

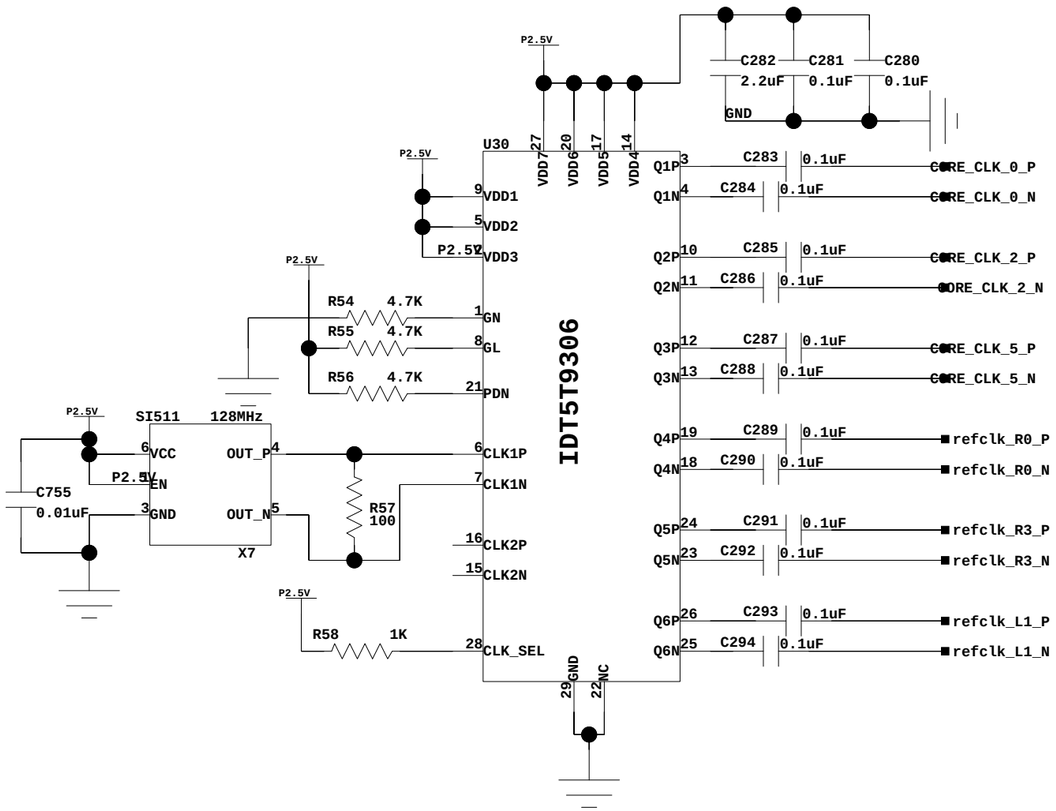

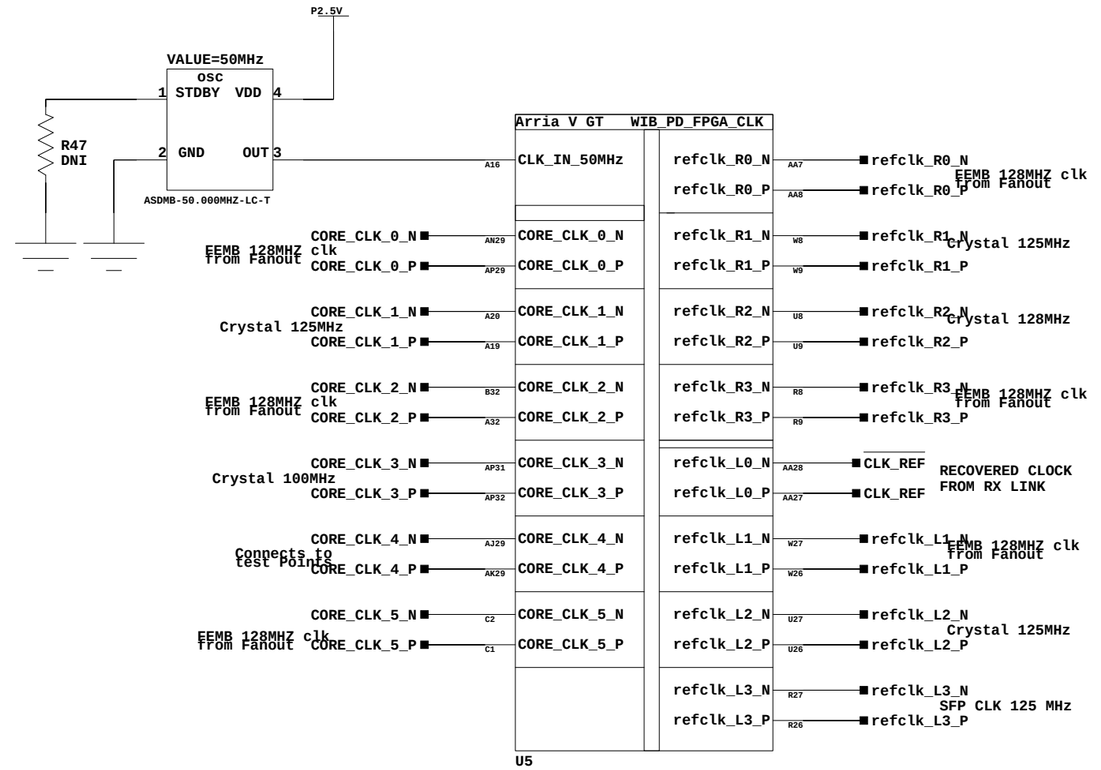

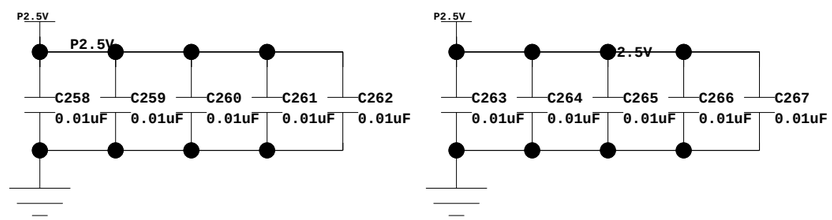

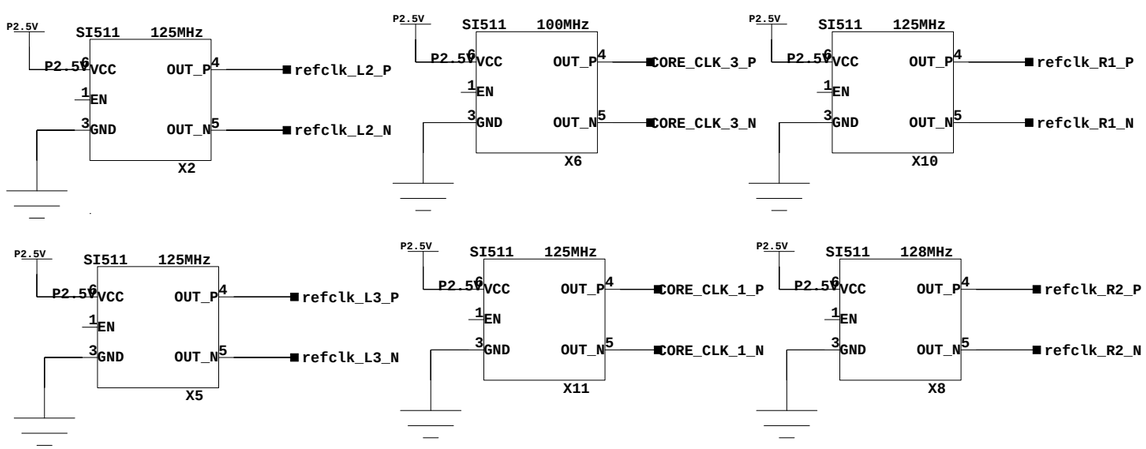

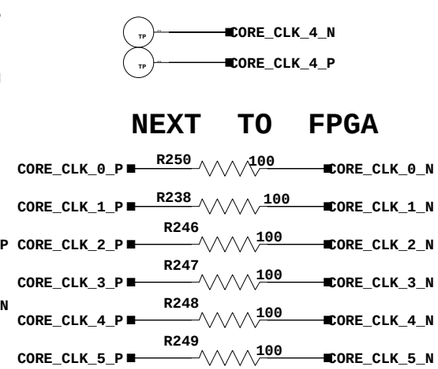

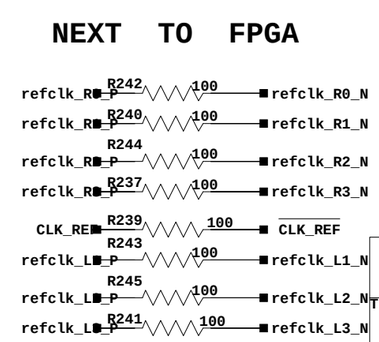

BROOKHAVEN NATIONAL LABORATORY
INSTRUMENTATION DIVISION

TITLE **WIB_CLK_GEN**

SIZE B	BOARD : ProtoDUNE_WIB
DRAWN : Jack Fried	DATE : 28/02/2017:17:30

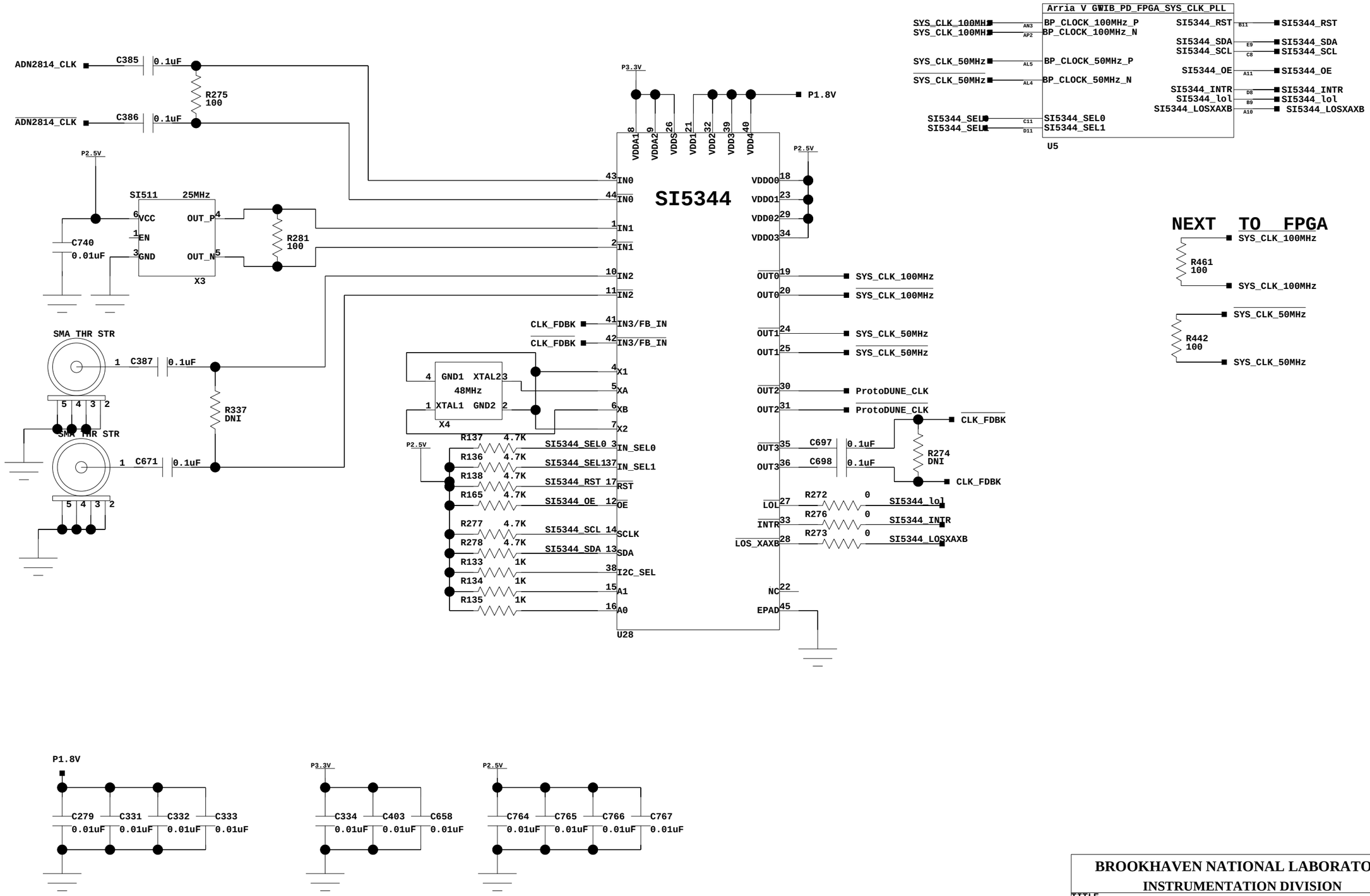

BROOKHAVEN NATIONAL LABORATORY
INSTRUMENTATION DIVISION

TITLE
WIB_SYS_CLK_PLL

SIZE B	BOARD : ProtoDUNE_WIB
DRAWN : Jack Fried	DATE : 28/02/2017:17:30

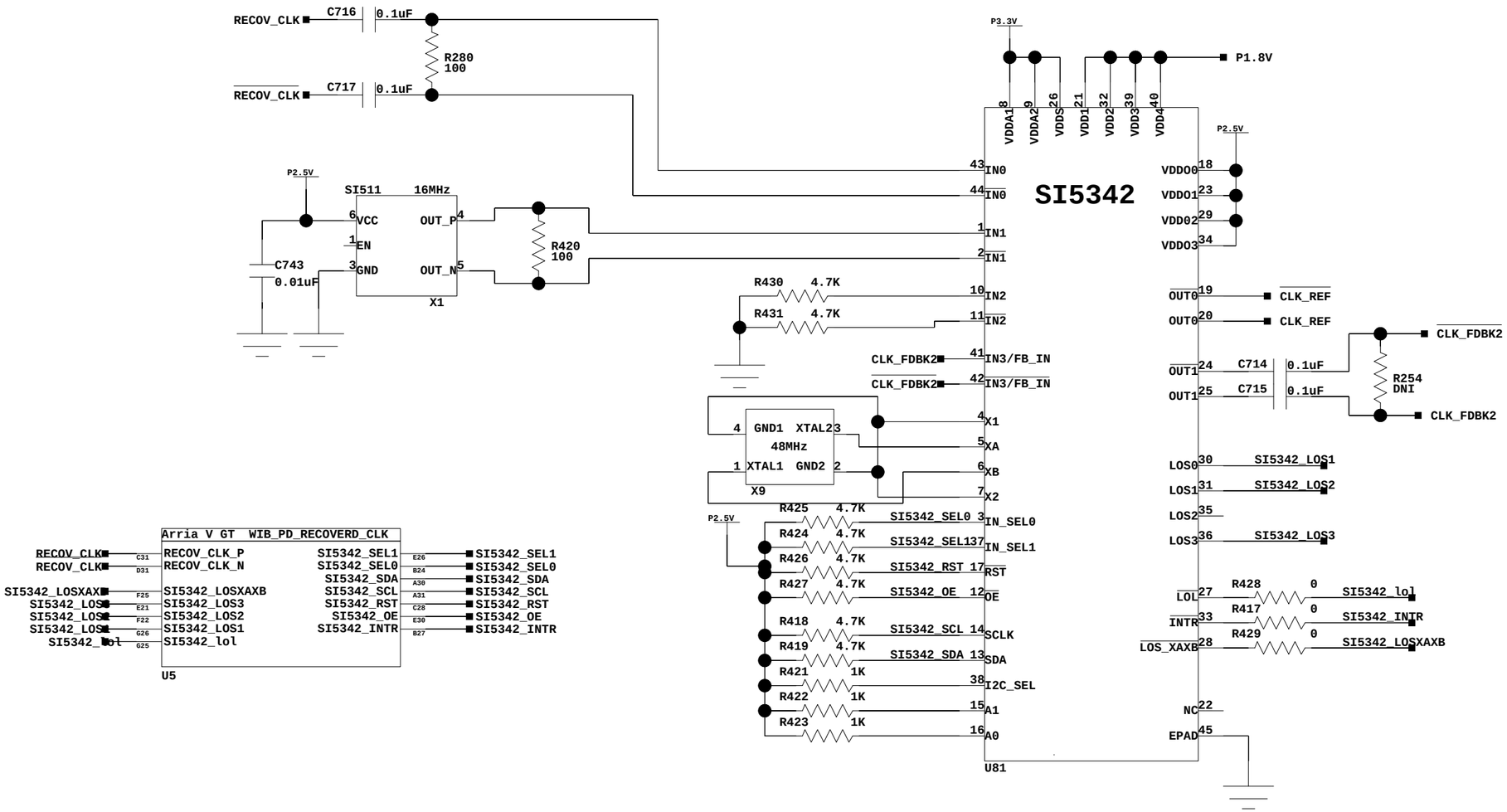

BROOKHAVEN NATIONAL LABORATORY
INSTRUMENTATION DIVISION

TITLE
WIB_RECOVERED_CLK_PLL

SIZE B	BOARD : ProtoDUNE_WIB
DRAWN : Jack Fried	DATE : 28/02/2017:17:30

FRONT PANNEL

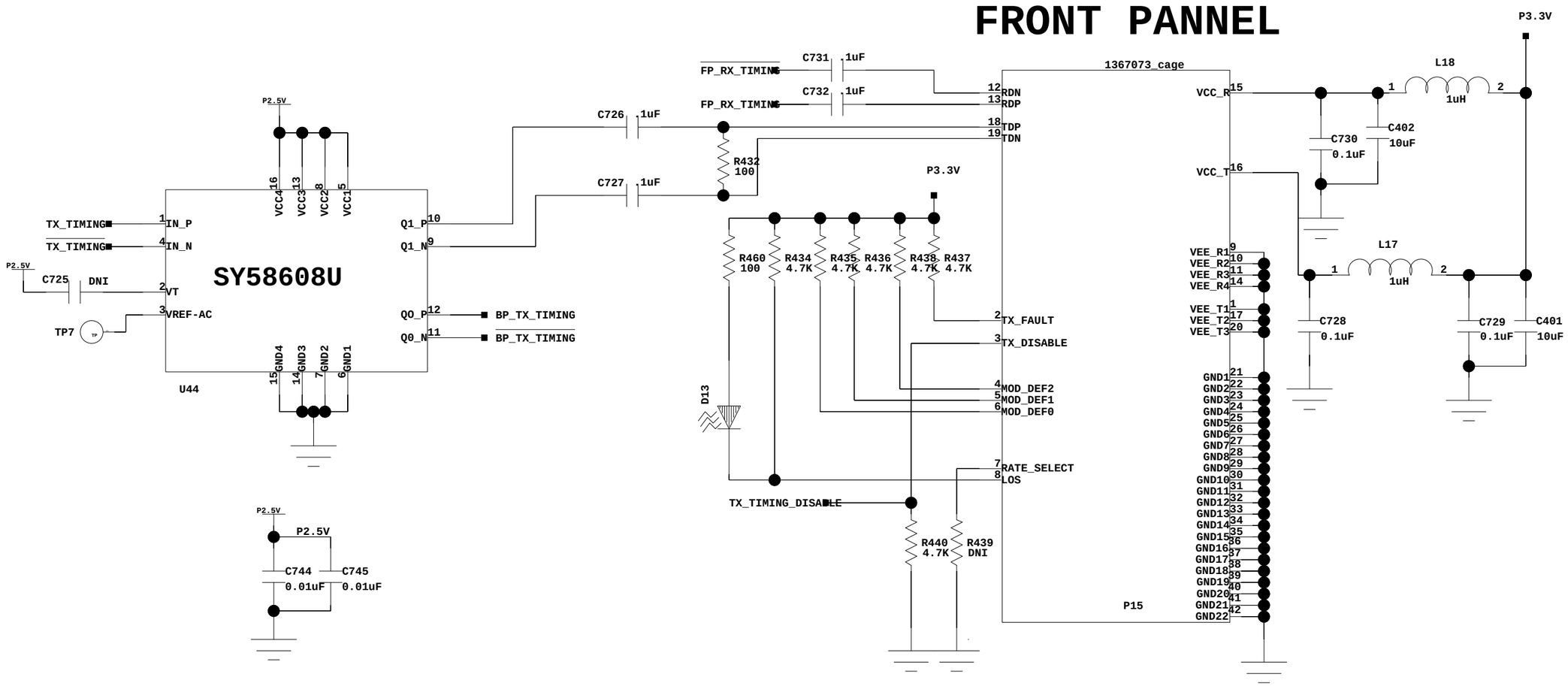

BROOKHAVEN NATIONAL LABORATORY
INSTRUMENTATION DIVISION

TITLE
WIB_CLK_DATA_RECOV_SFP

SIZE B	BOARD : ProtoDUNE_WIB
DRAWN : Jack Fried	DATE : 28/02/2017:17:30

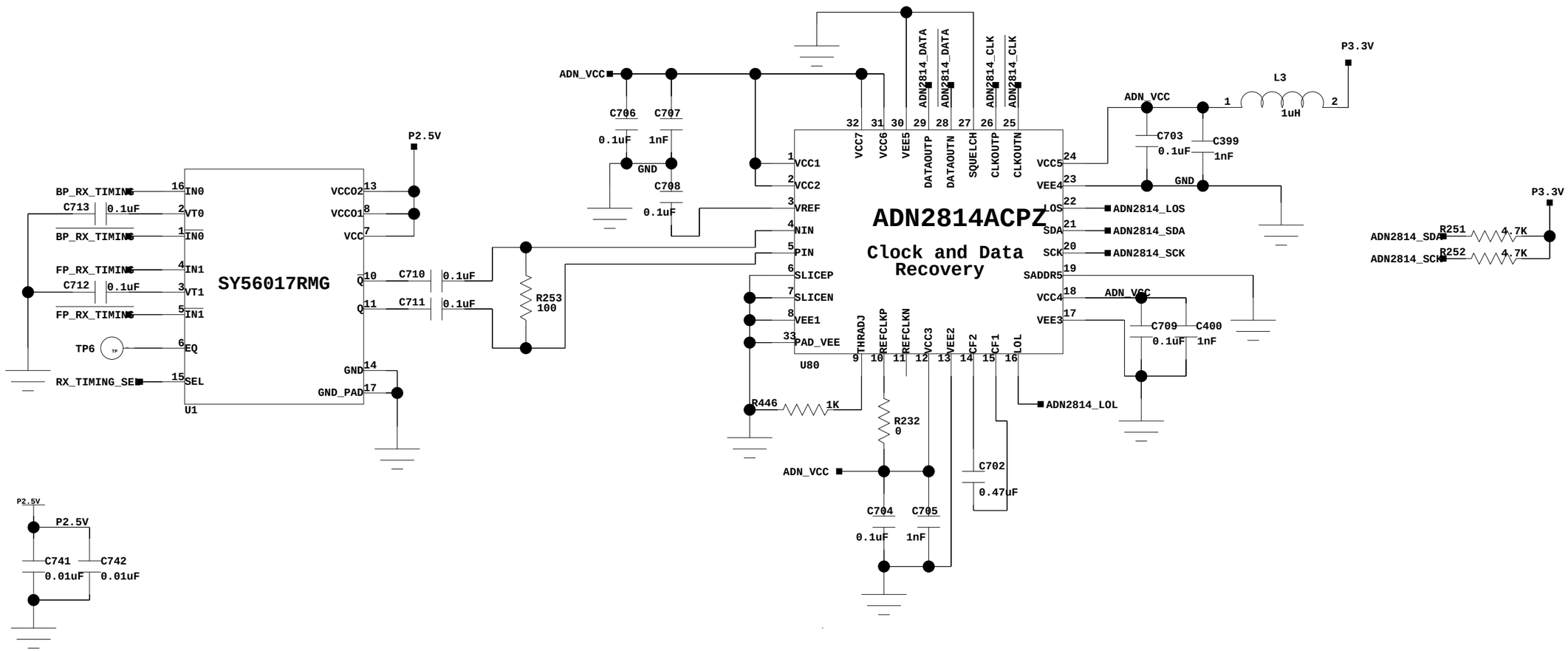

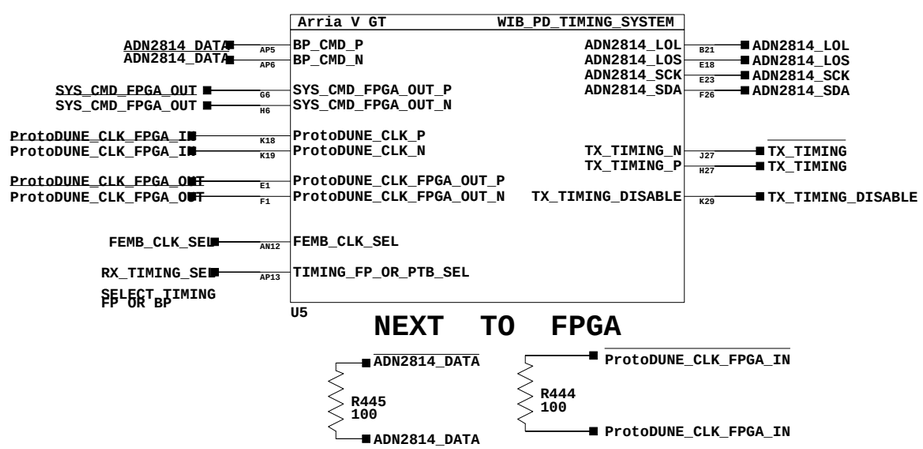

BROOKHAVEN NATIONAL LABORATORY
INSTRUMENTATION DIVISION

TITLE
WIB_CLK_DATA_RECOVERY

SIZE B	BOARD : ProtoDUNE_WIB
DRAWN : Jack Fried	DATE : 28/02/2017:17:30

FRONT PANNEL

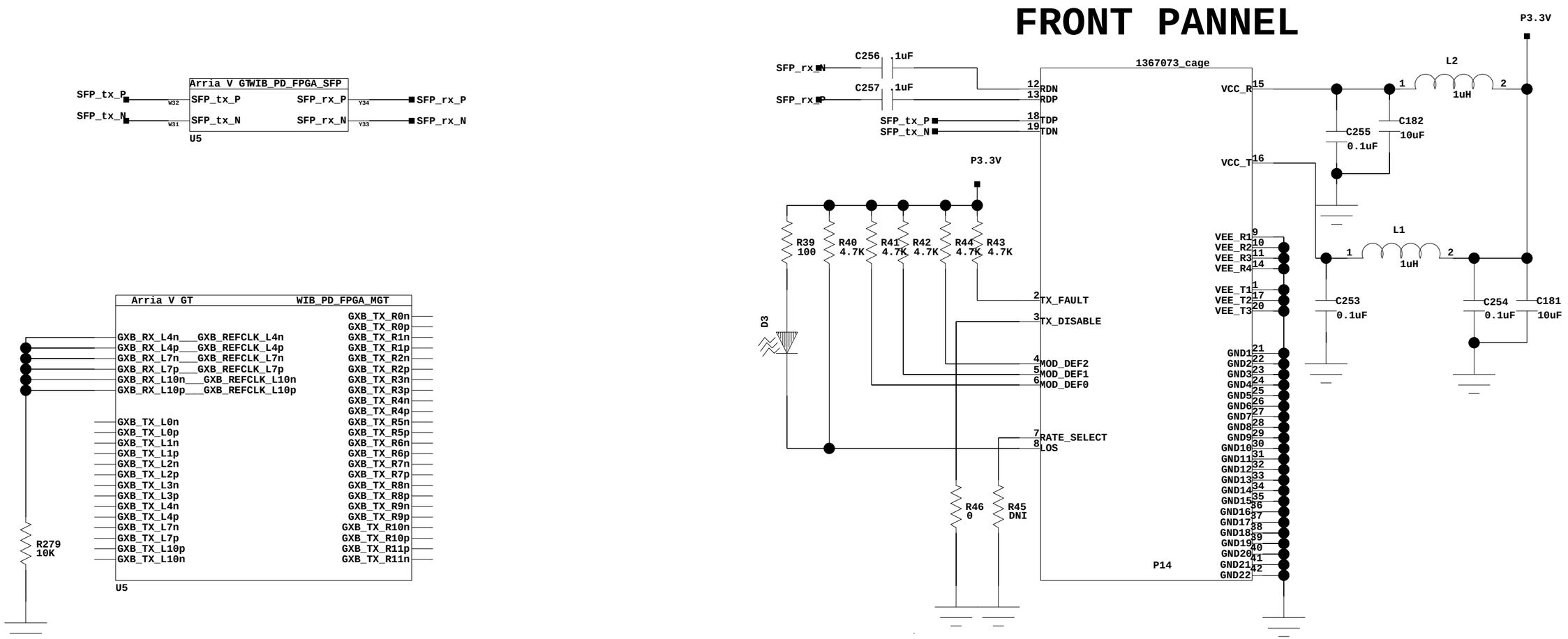

BROOKHAVEN NATIONAL LABORATORY
INSTRUMENTATION DIVISION

TITLE
WIB_ETHERNET_SFP

SIZE B	BOARD : ProtoDUNE_WIB
DRAWN : Jack Fried	DATE : 28/02/2017:17:30

FRONT PANNEL

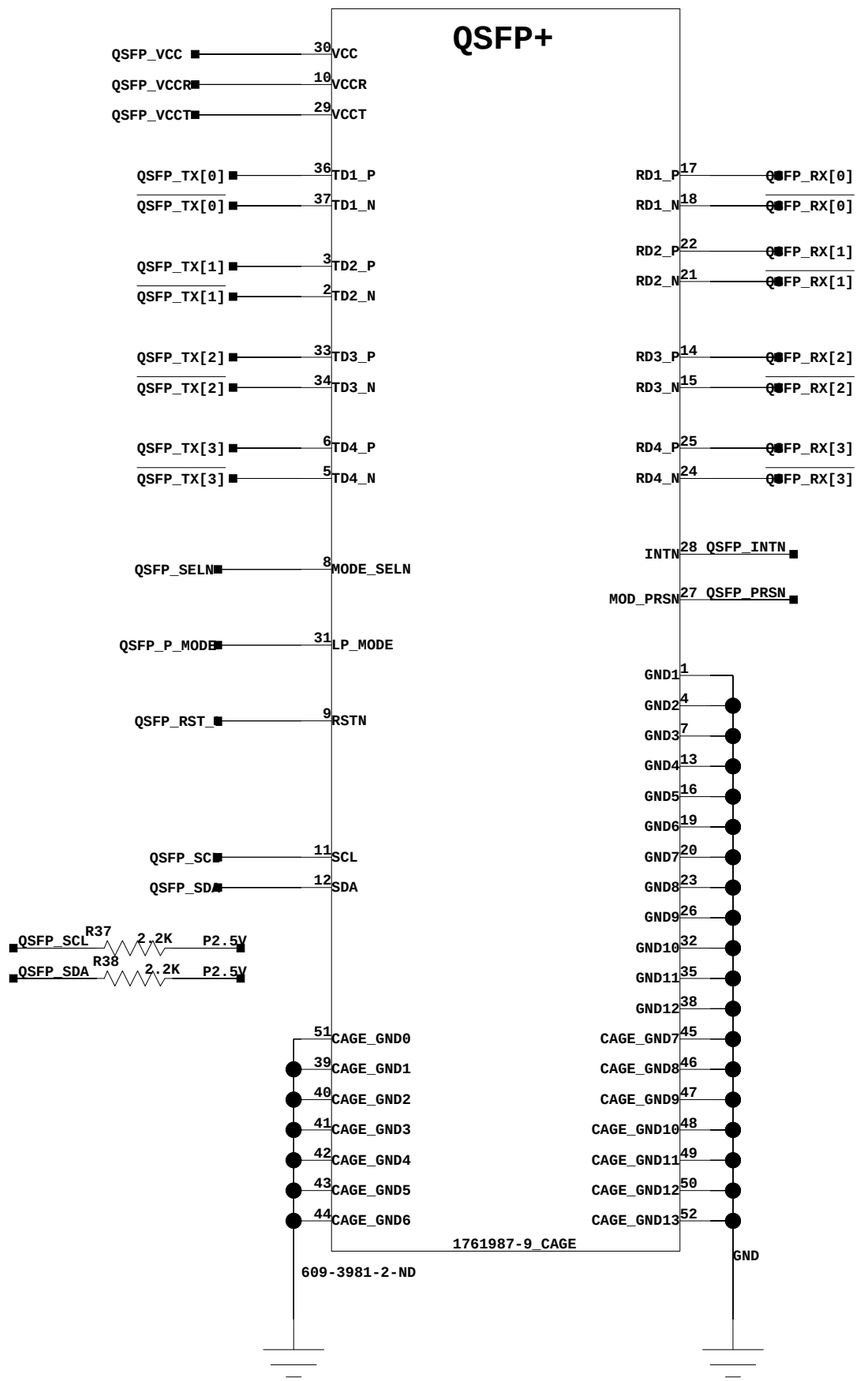

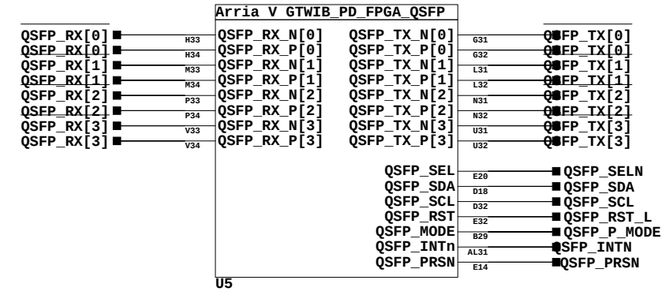

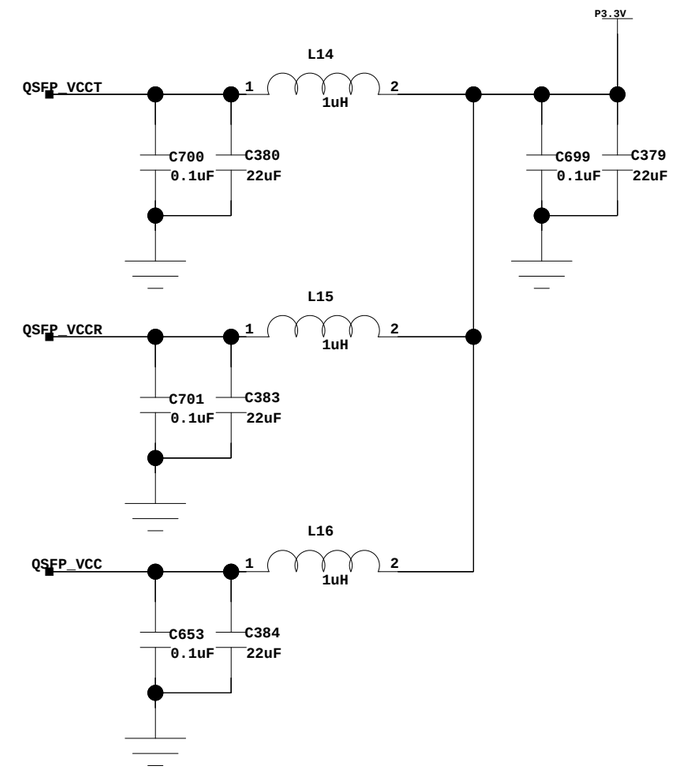

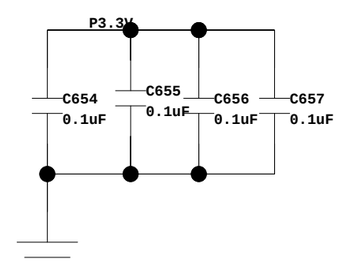

BROOKHAVEN NATIONAL LABORATORY
INSTRUMENTATION DIVISION

TITLE
WIB_QSFP+

SIZE B	BOARD : ProtoDUNE_WIB
DRAWN : Jack Fried	DATE : 28/02/2017:17:30

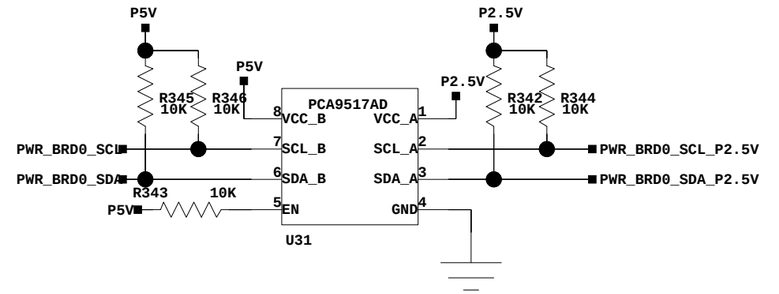

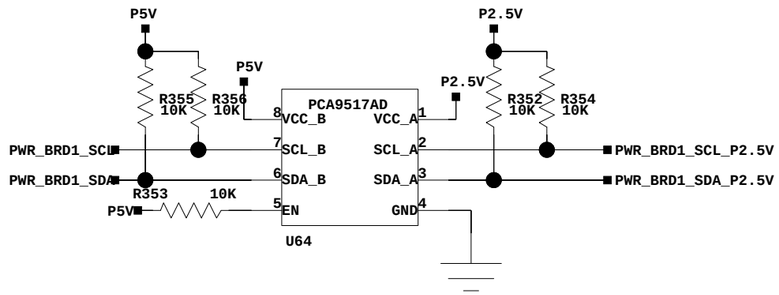

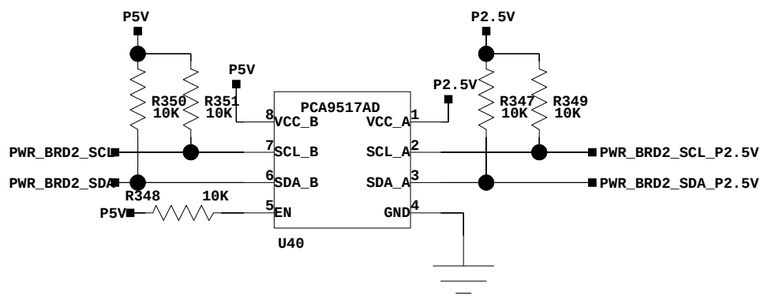

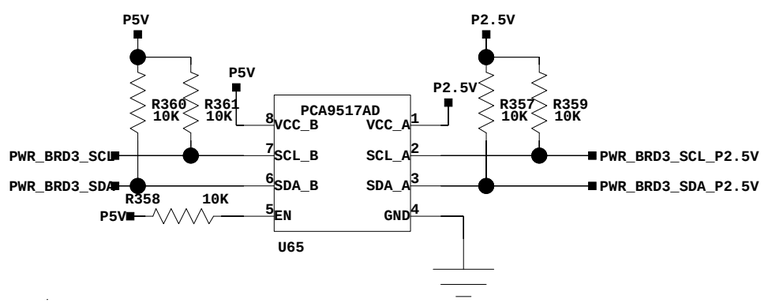

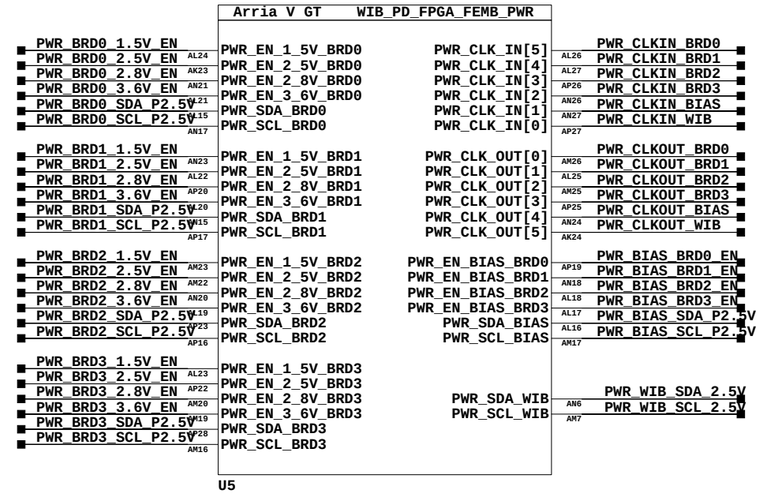

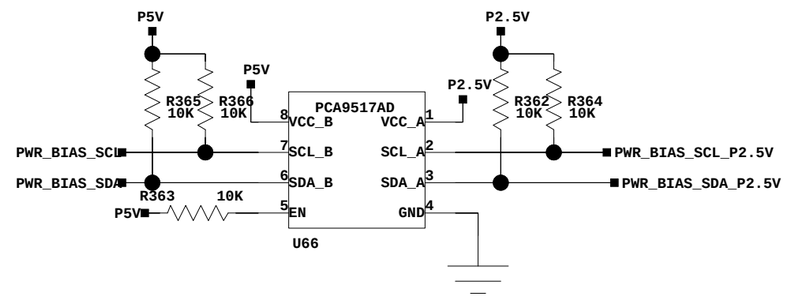

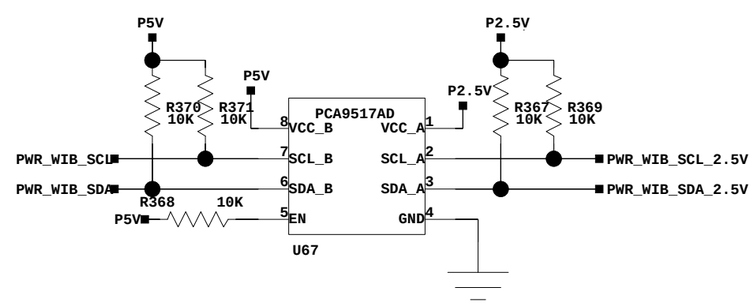

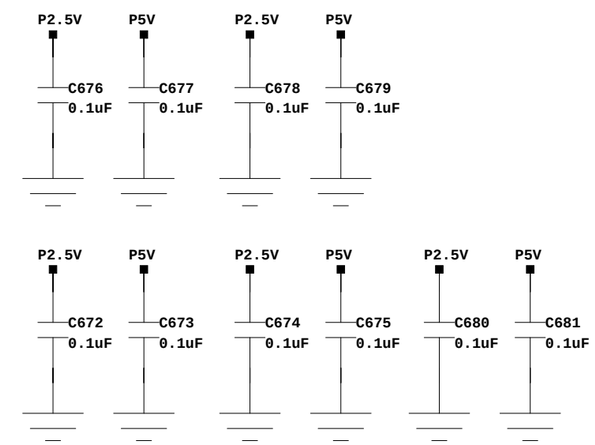

BROOKHAVEN NATIONAL LABORATORY
INSTRUMENTATION DIVISION

TITLE
WIB_FEMB_PWR_CNTL

SIZE B	BOARD : ProtoDUNE_WIB
DRAWN : Jack Fried	DATE : 28/02/2017:17:30

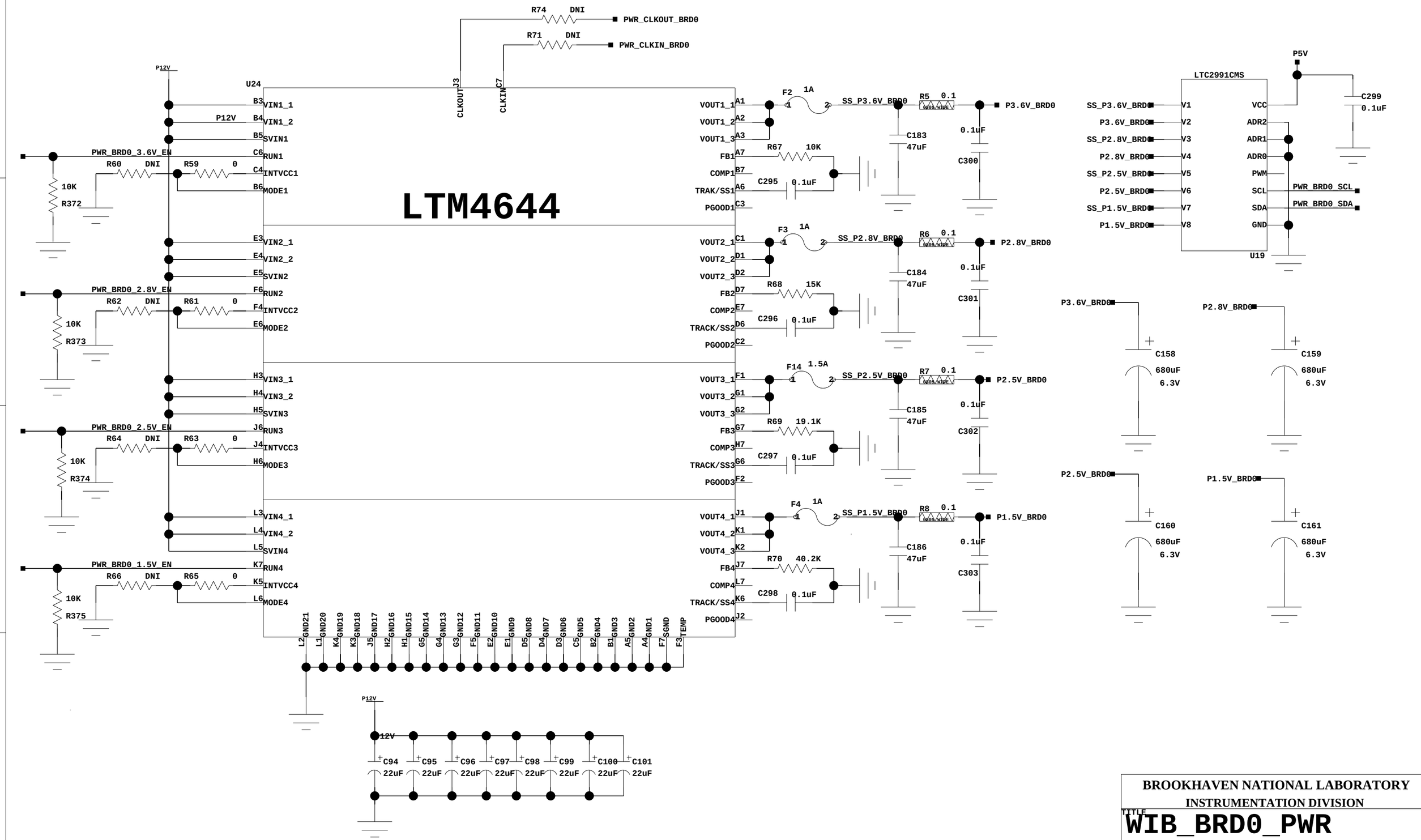

BROOKHAVEN NATIONAL LABORATORY
INSTRUMENTATION DIVISION

TITLE
WIB_BRD0_PWR

SIZE B	BOARD : ProtoDUNE_WIB
DRAWN : Jack Fried	DATE : 28/02/2017:17:30

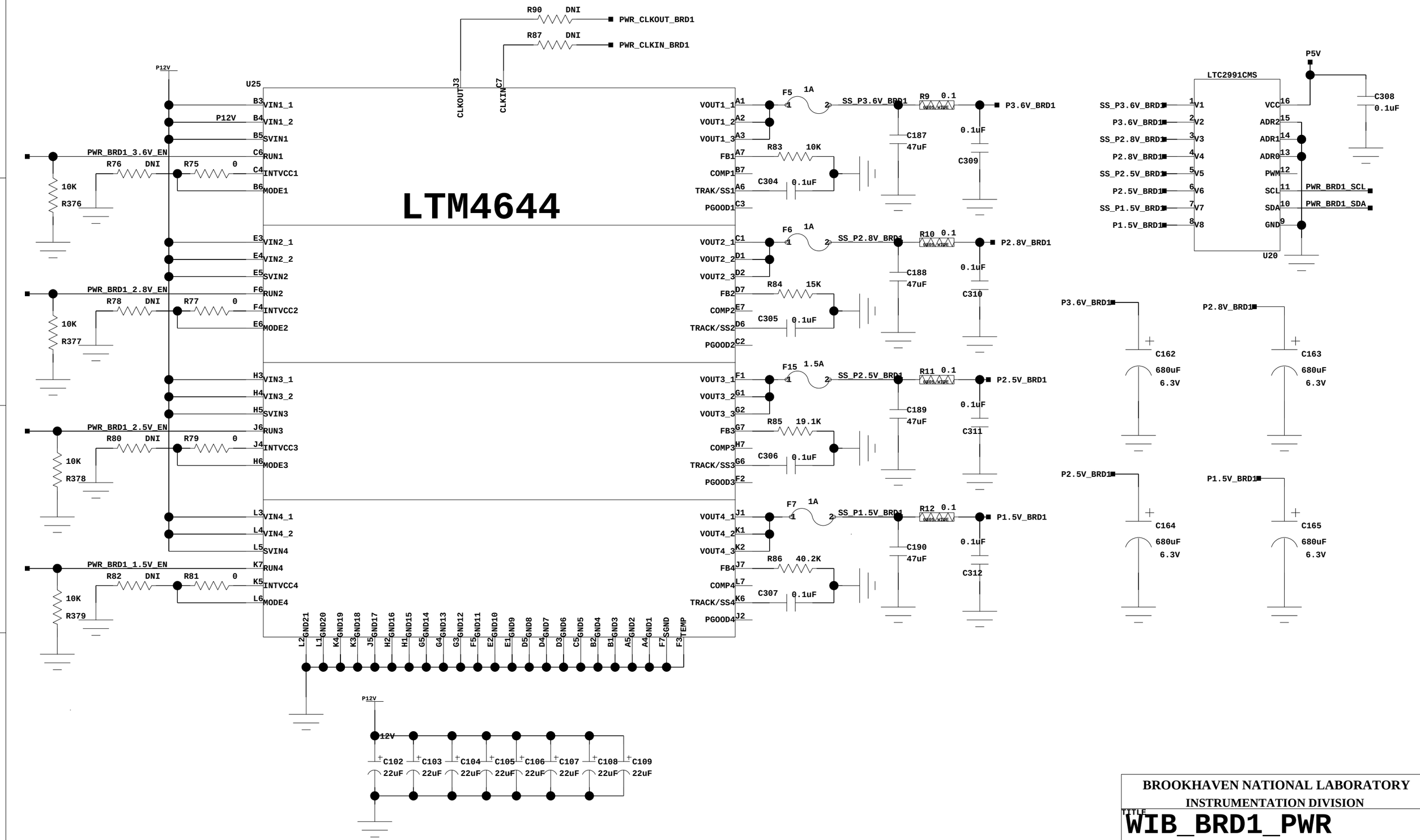

BROOKHAVEN NATIONAL LABORATORY
INSTRUMENTATION DIVISION

TITLE
WIB_BRD1_PWR

SIZE B	BOARD : ProtoDUNE_WIB
DRAWN : Jack Fried	DATE : 28/02/2017:17:30

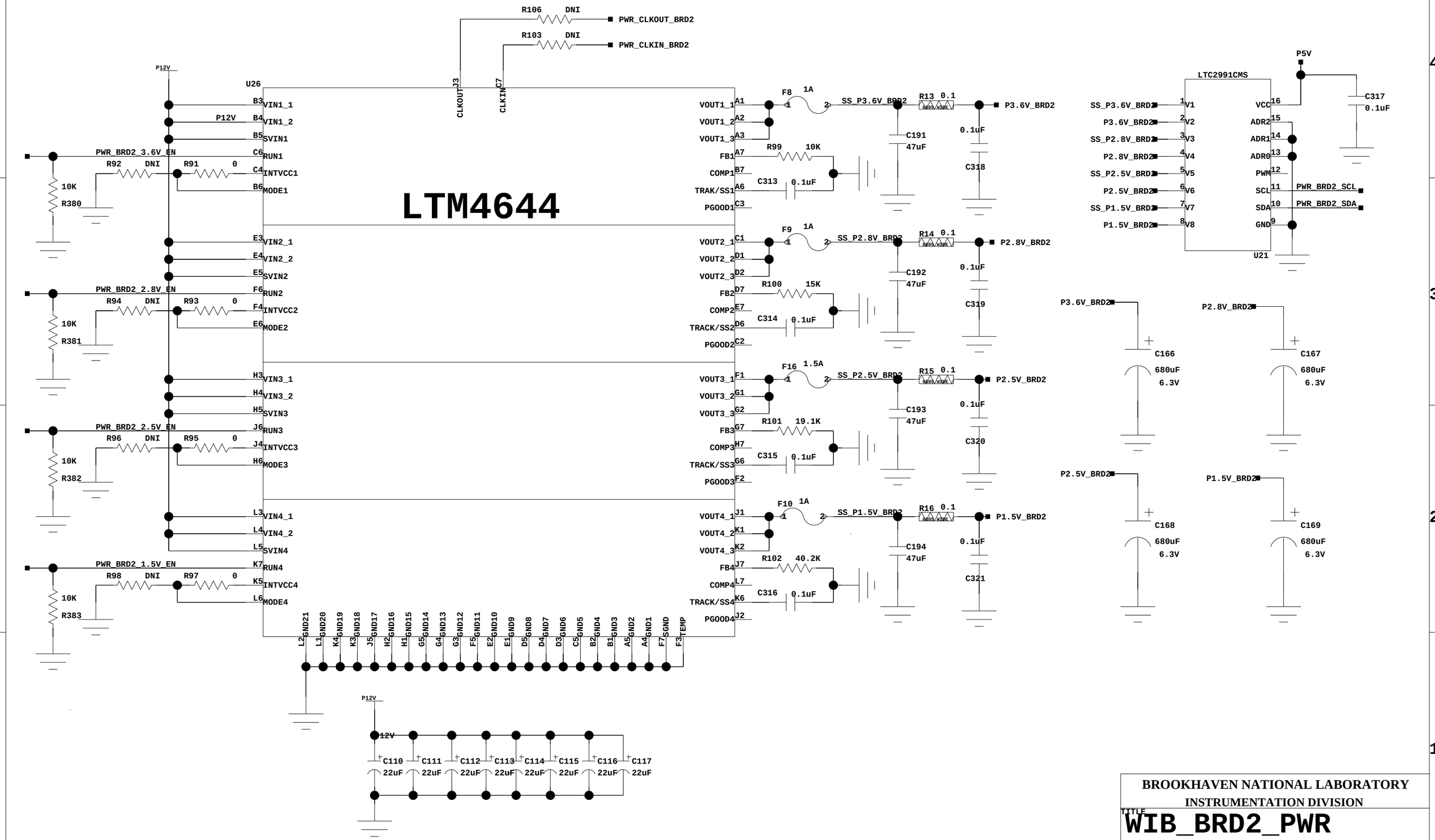

BROOKHAVEN NATIONAL LABORATORY
INSTRUMENTATION DIVISION

TITLE
WIB_BRD2_PWR

SIZE B	BOARD : ProtoDUNE_WIB
DRAWN : Jack Fried	DATE : 28/02/2017:17:30

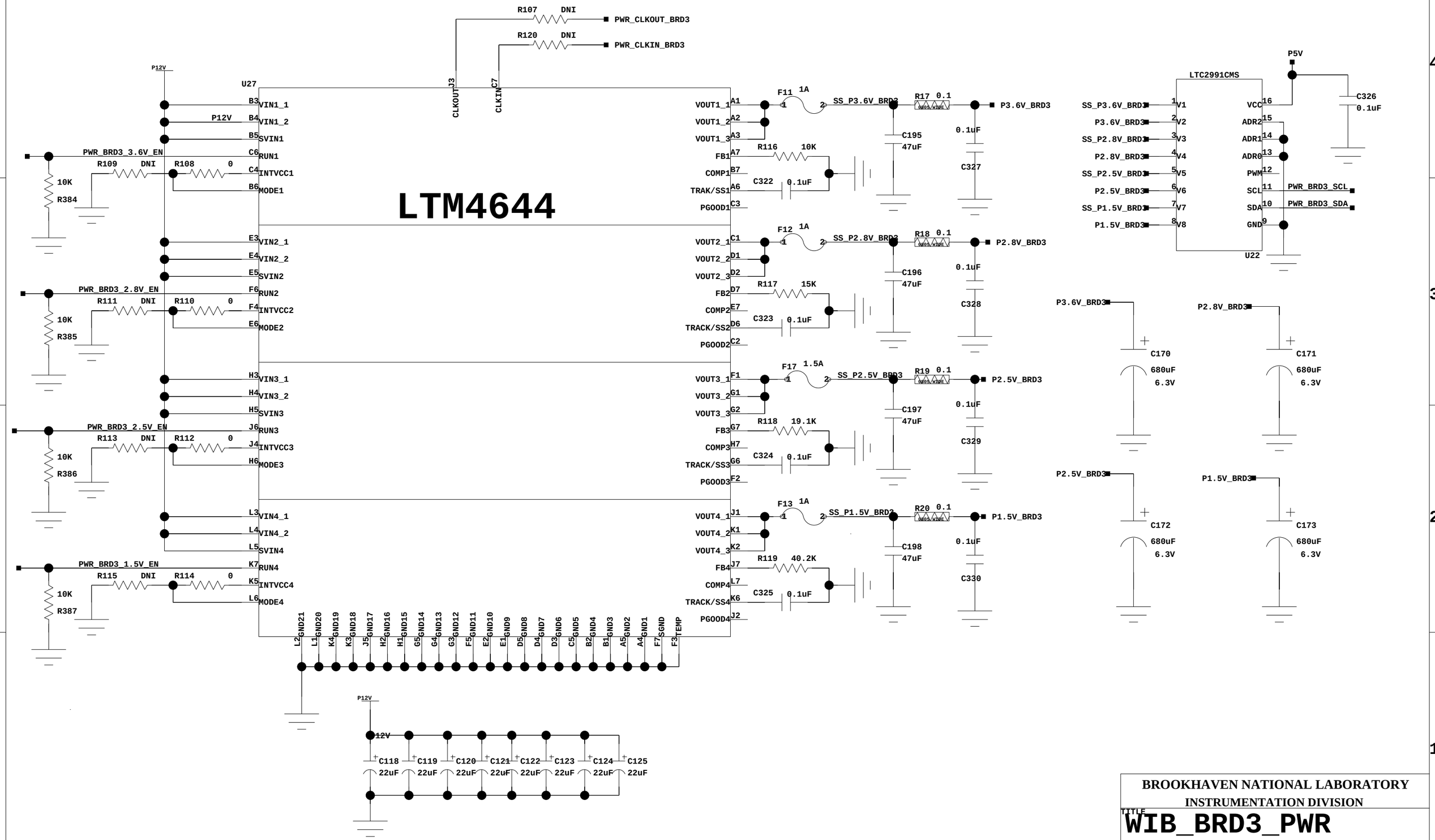

BROOKHAVEN NATIONAL LABORATORY
INSTRUMENTATION DIVISION

TITLE
WIB_BRD3_PWR

SIZE B	BOARD : ProtoDUNE_WIB
DRAWN : Jack Fried	DATE : 28/02/2017:17:30

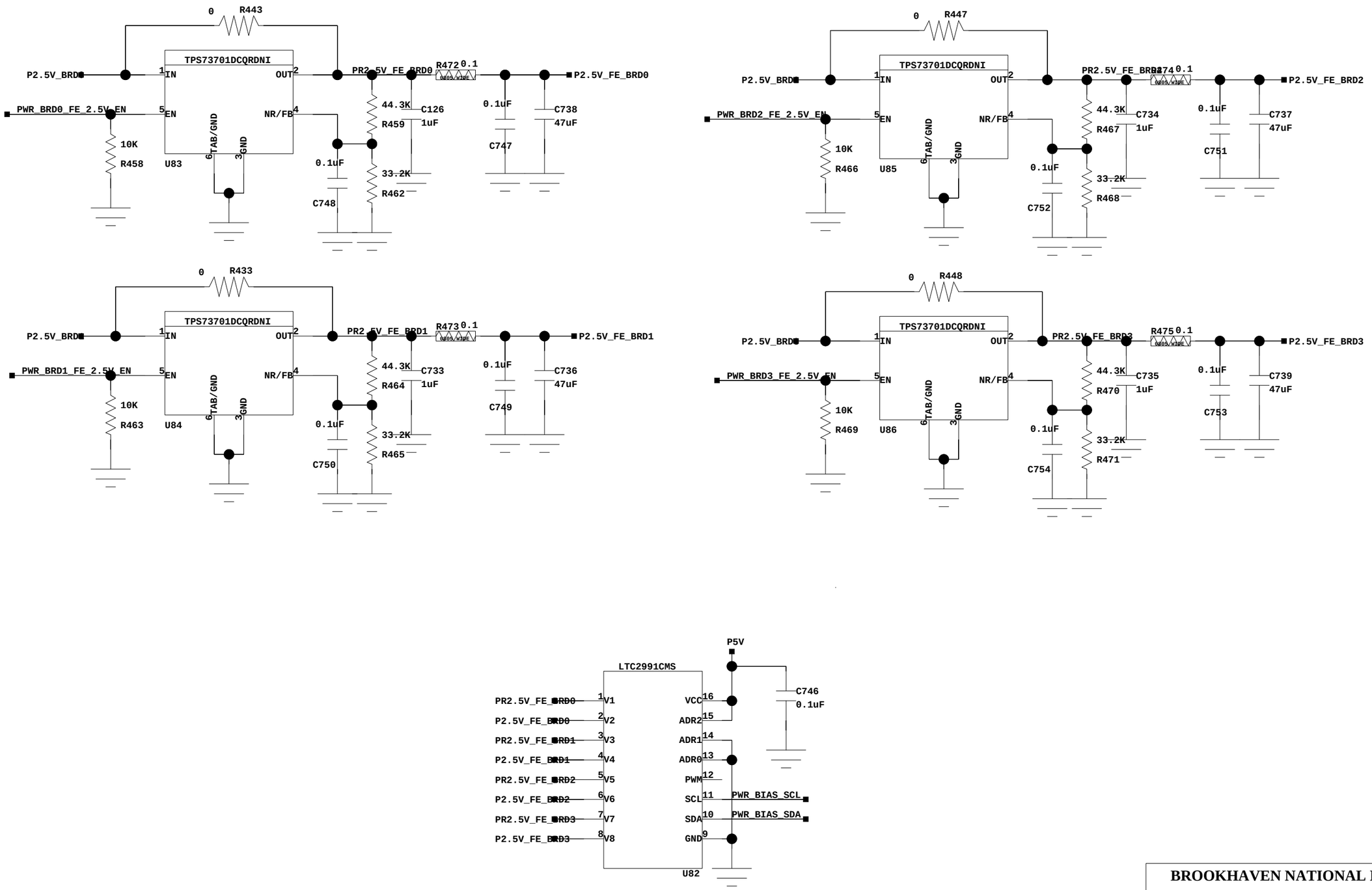

BROOKHAVEN NATIONAL LABORATORY

INSTRUMENTATION DIVISION

TITLE WIB_FE_ASIC_PWR_BRD0-3

SIZE B | BOARD : ProtoDUNE_WIB

DRAWN : Jack Fried | DATE : 28/02/2017:17:30

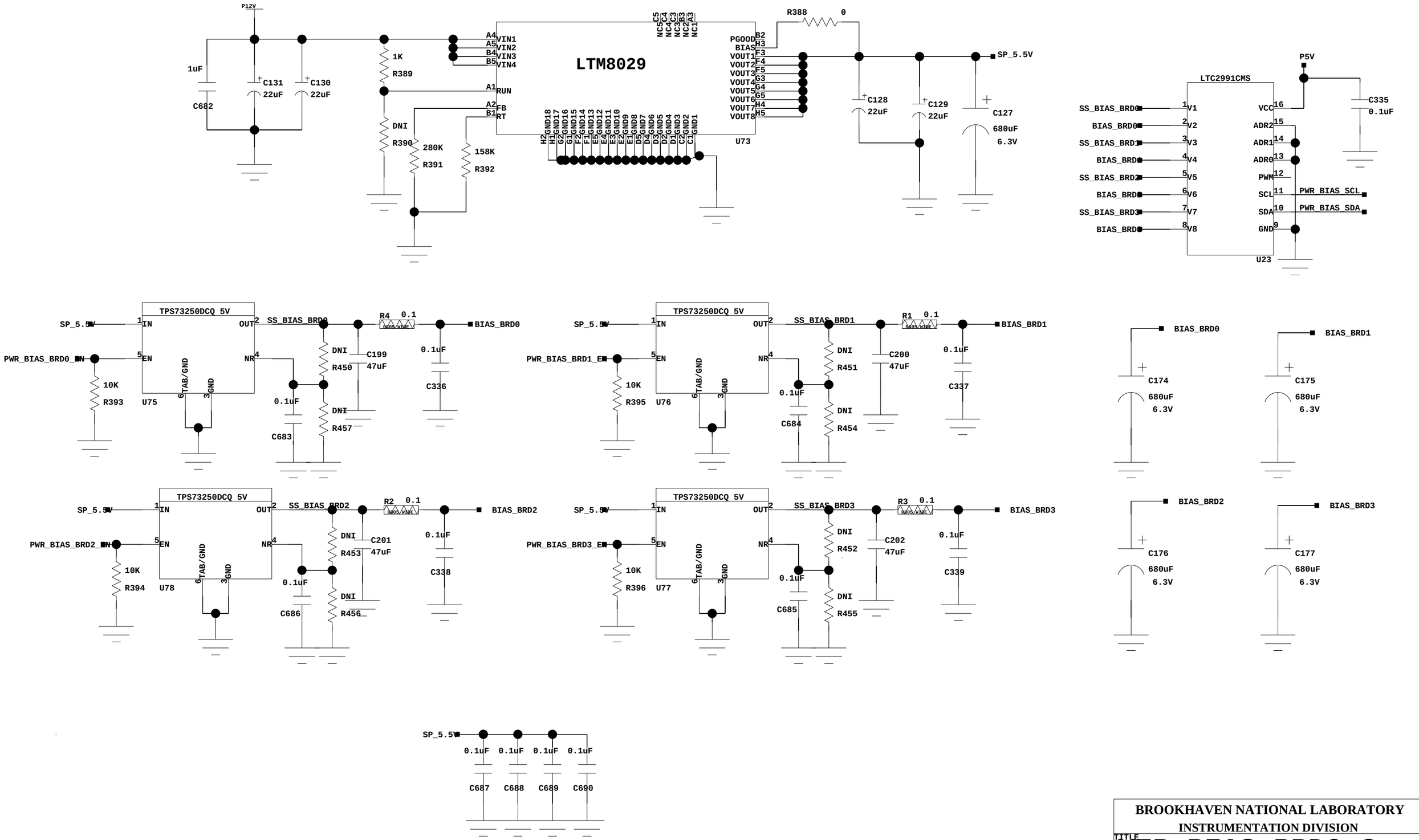

BROOKHAVEN NATIONAL LABORATORY
INSTRUMENTATION DIVISION

TITLE
WIB_BIAS_BRD0-3

SIZE B	BOARD : ProtoDUNE_WIB
DRAWN : Jack Fried	DATE : 28/02/2017:17:30

FRONT PANNEL

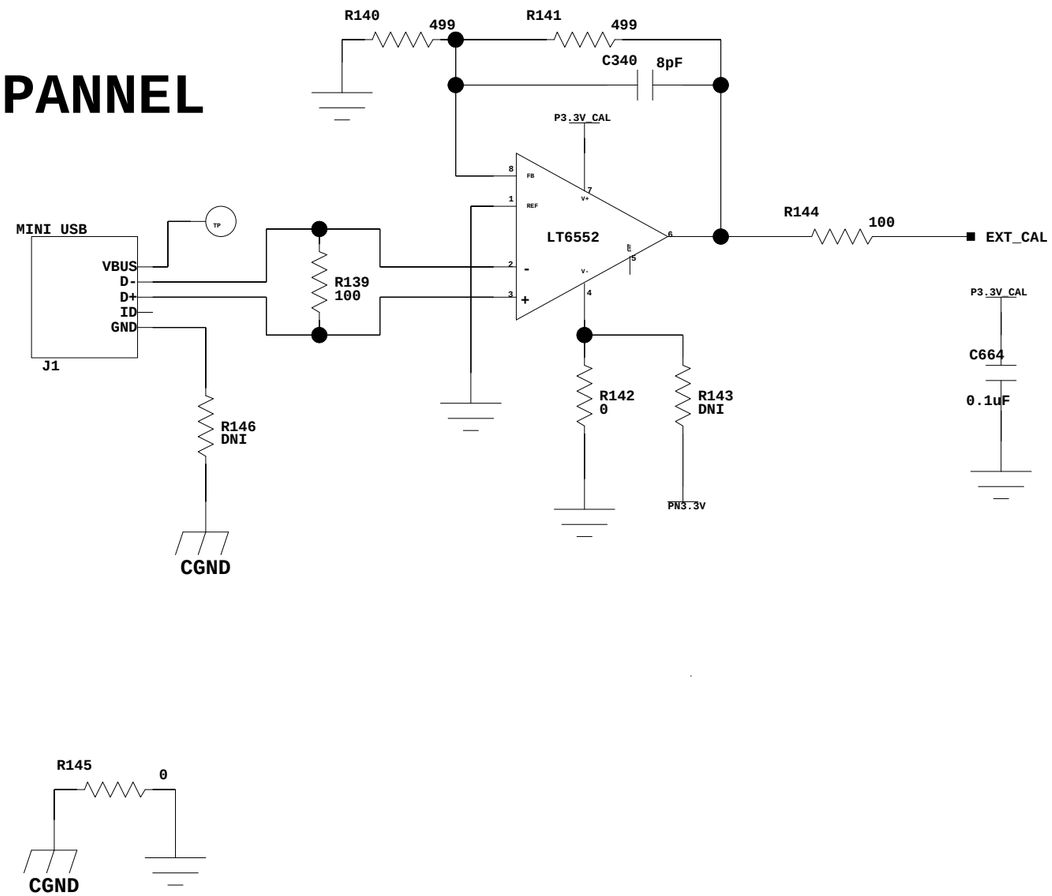

BROOKHAVEN NATIONAL LABORATORY
INSTRUMENTATION DIVISION

TITLE
WIB EXT CALB INPUT

SIZE B	BOARD : ProtoDUNE_WIB
DRAWN : Jack Fried	DATE : 28/02/2017:17:30

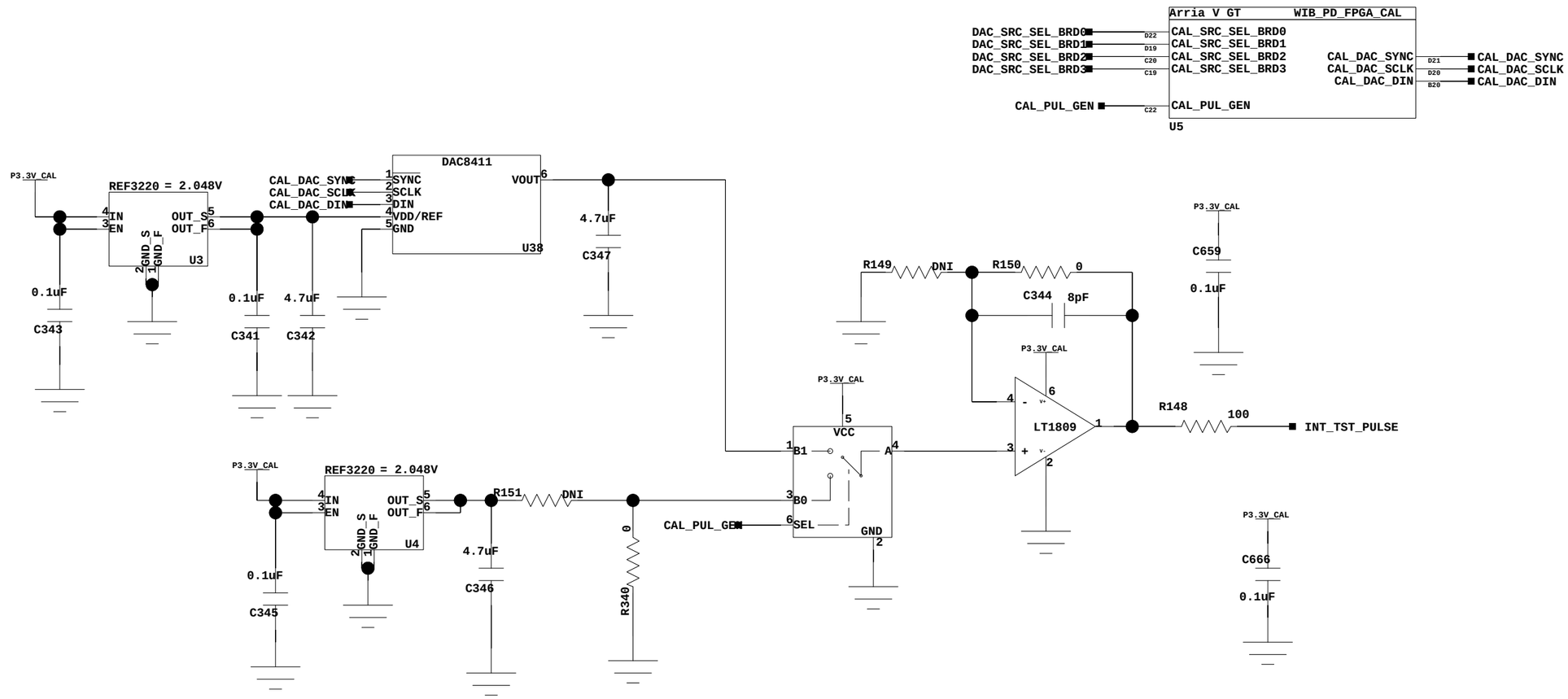

BROOKHAVEN NATIONAL LABORATORY
INSTRUMENTATION DIVISION

TITLE
WIB INT CAL DAC

SIZE B	BOARD : ProtoDUNE_WIB
DRAWN : Jack Fried	DATE : 28/02/2017:17:30

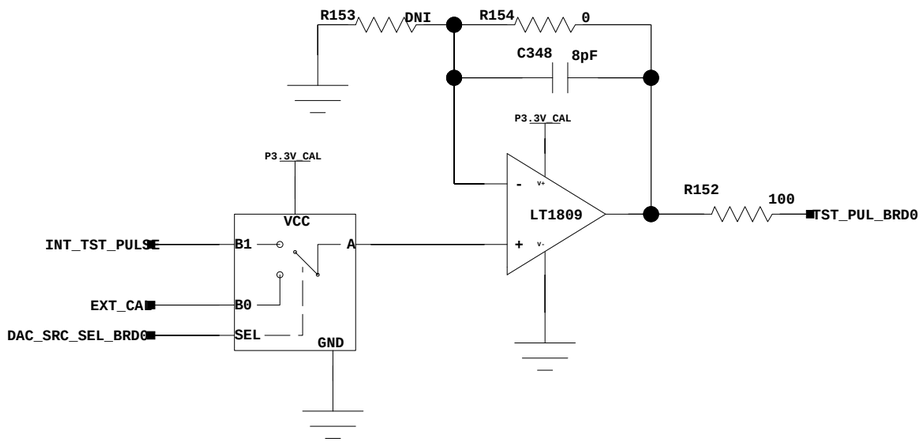

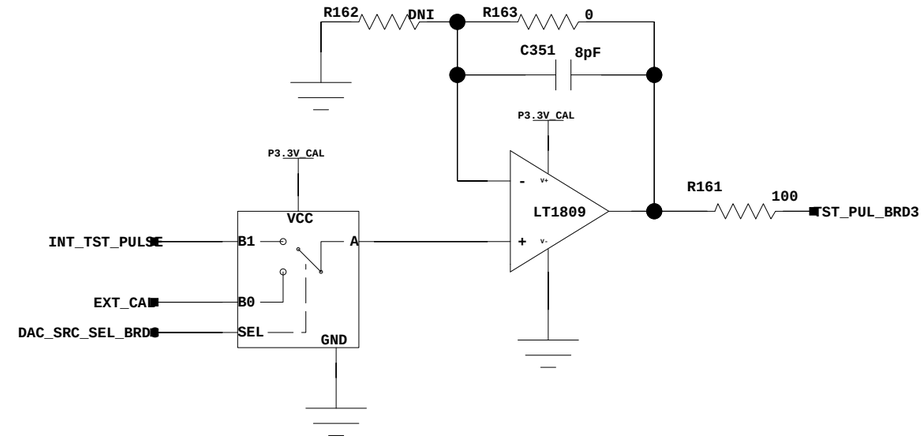

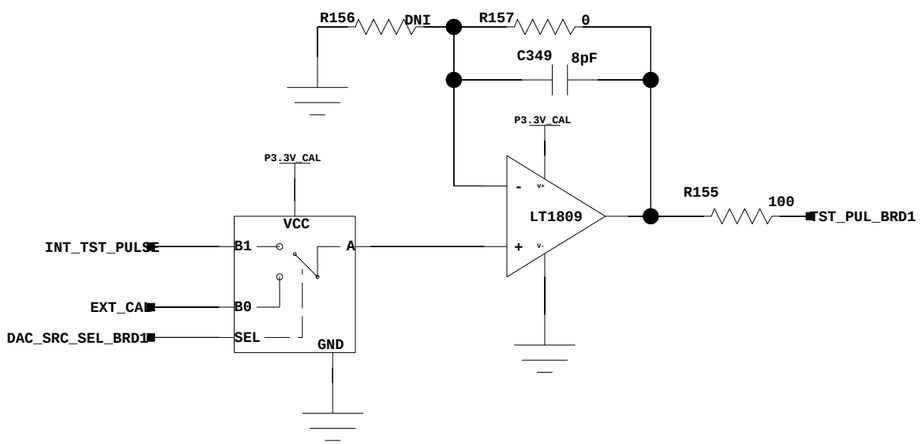

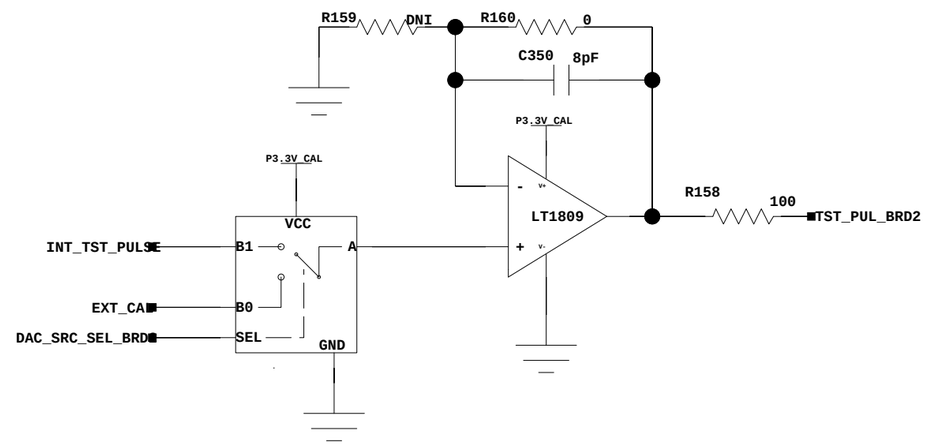

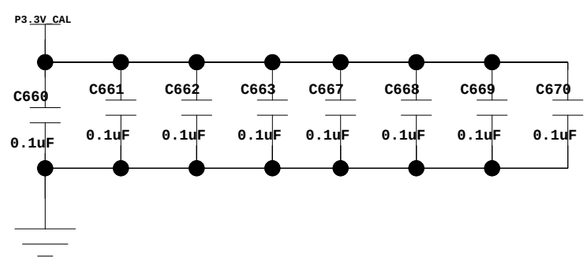

BROOKHAVEN NATIONAL LABORATORY
INSTRUMENTATION DIVISION

TITLE
WIB_CAL_DRIVERS

SIZE B	BOARD : ProtoDUNE_WIB
DRAWN : Jack Fried	DATE : 28/02/2017:17:30

FRONT PANNEL

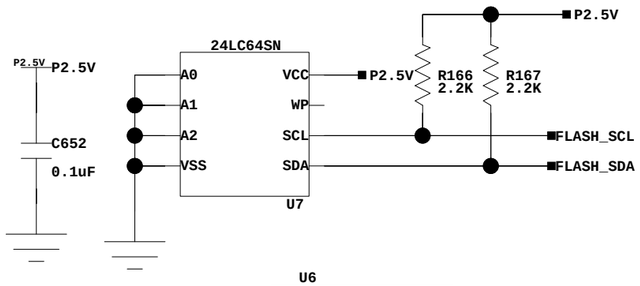

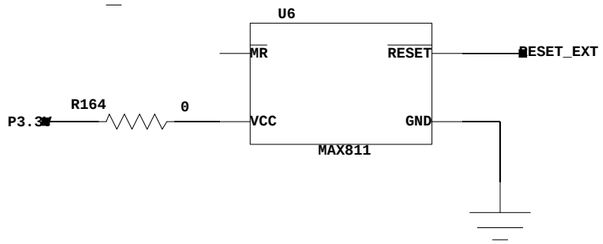

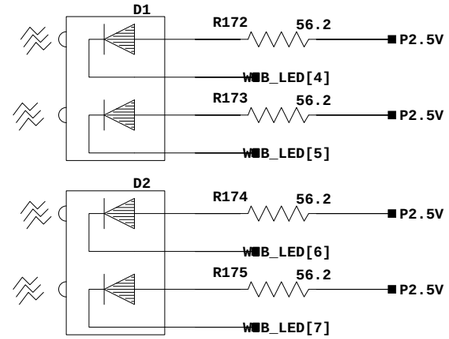

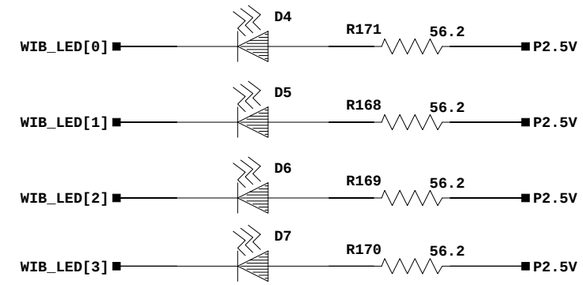

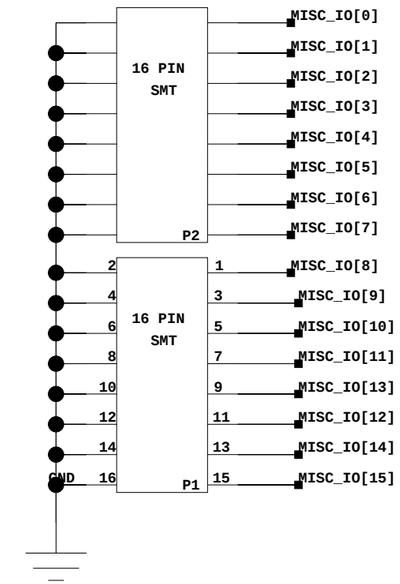

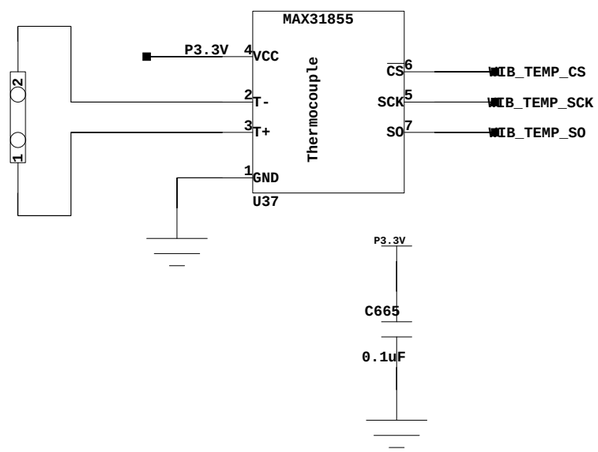

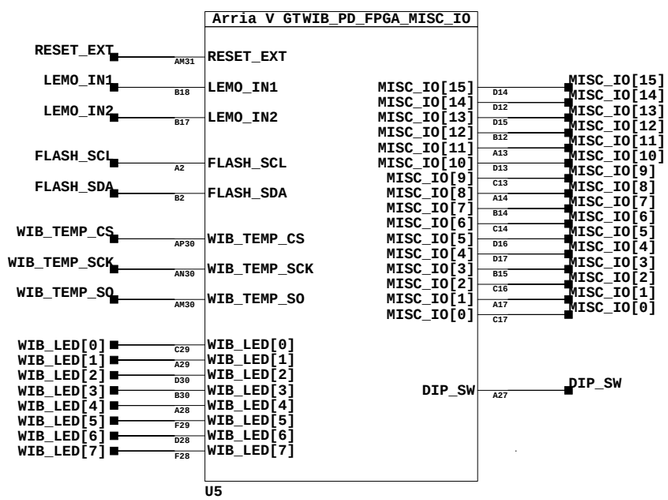

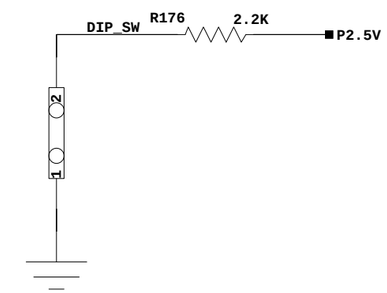

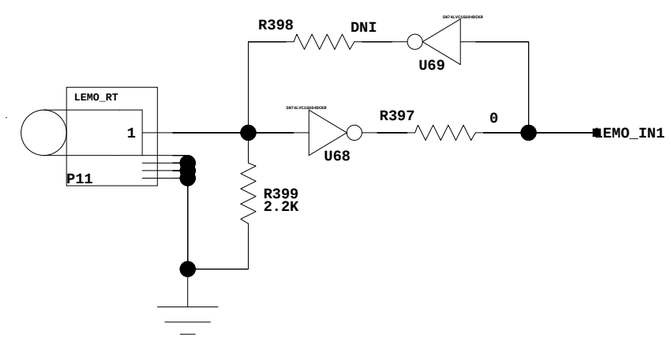

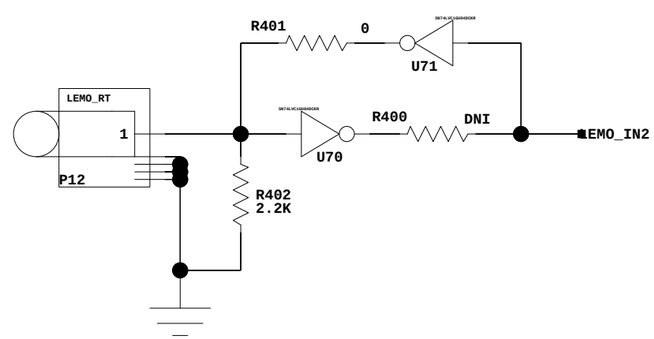

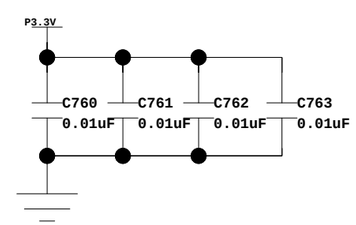

BROOKHAVEN NATIONAL LABORATORY
INSTRUMENTATION DIVISION

TITLE
WIB_MISC_IO

SIZE B	BOARD : ProtoDUNE_WIB
DRAWN : Jack Fried	DATE : 28/02/2017:17:30

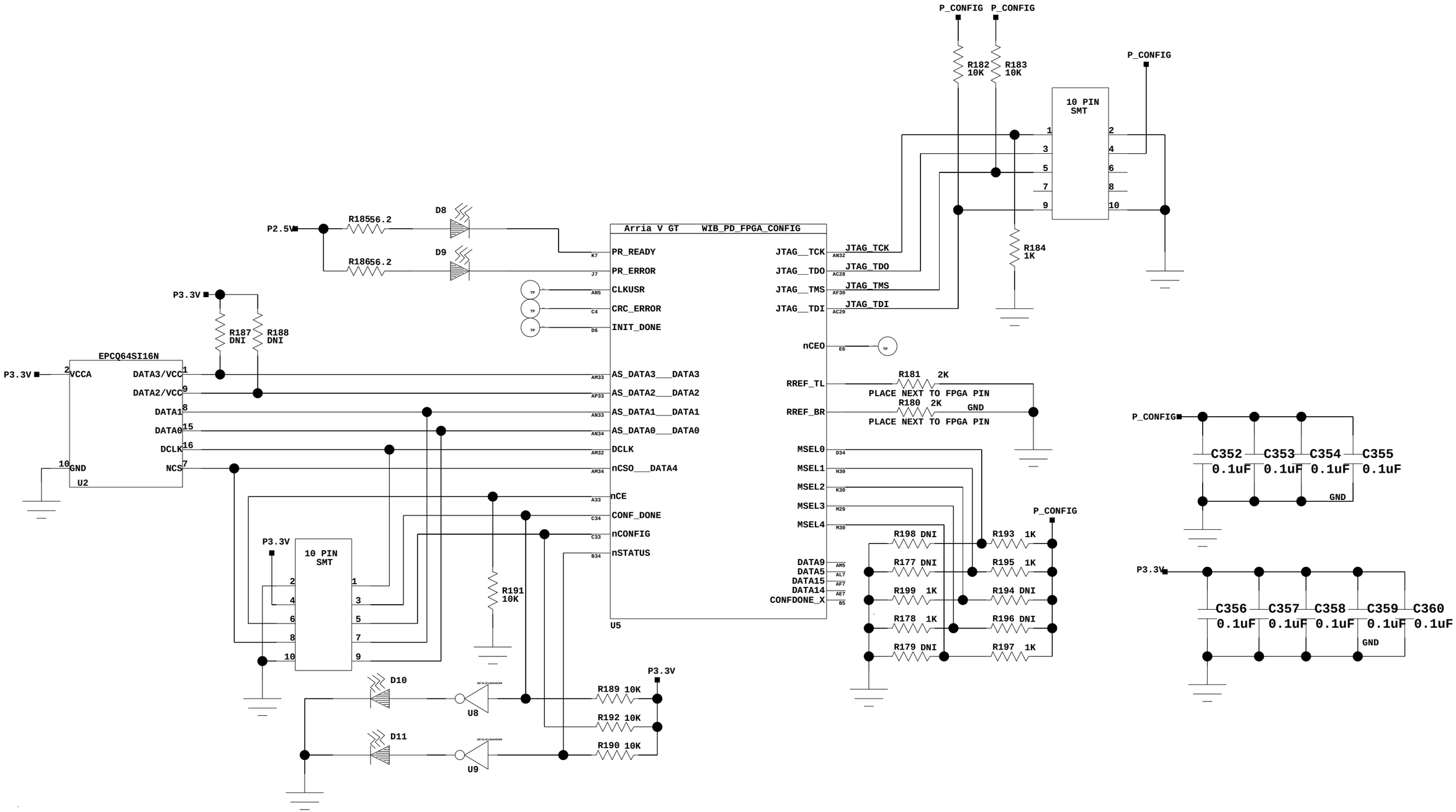

BROOKHAVEN NATIONAL LABORATORY
INSTRUMENTATION DIVISION

TITLE
WIB_FPGA_CONFIG

SIZE B	BOARD : ProtoDUNE_WIB
DRAWN : Jack Fried	DATE : 28/02/2017:17:30

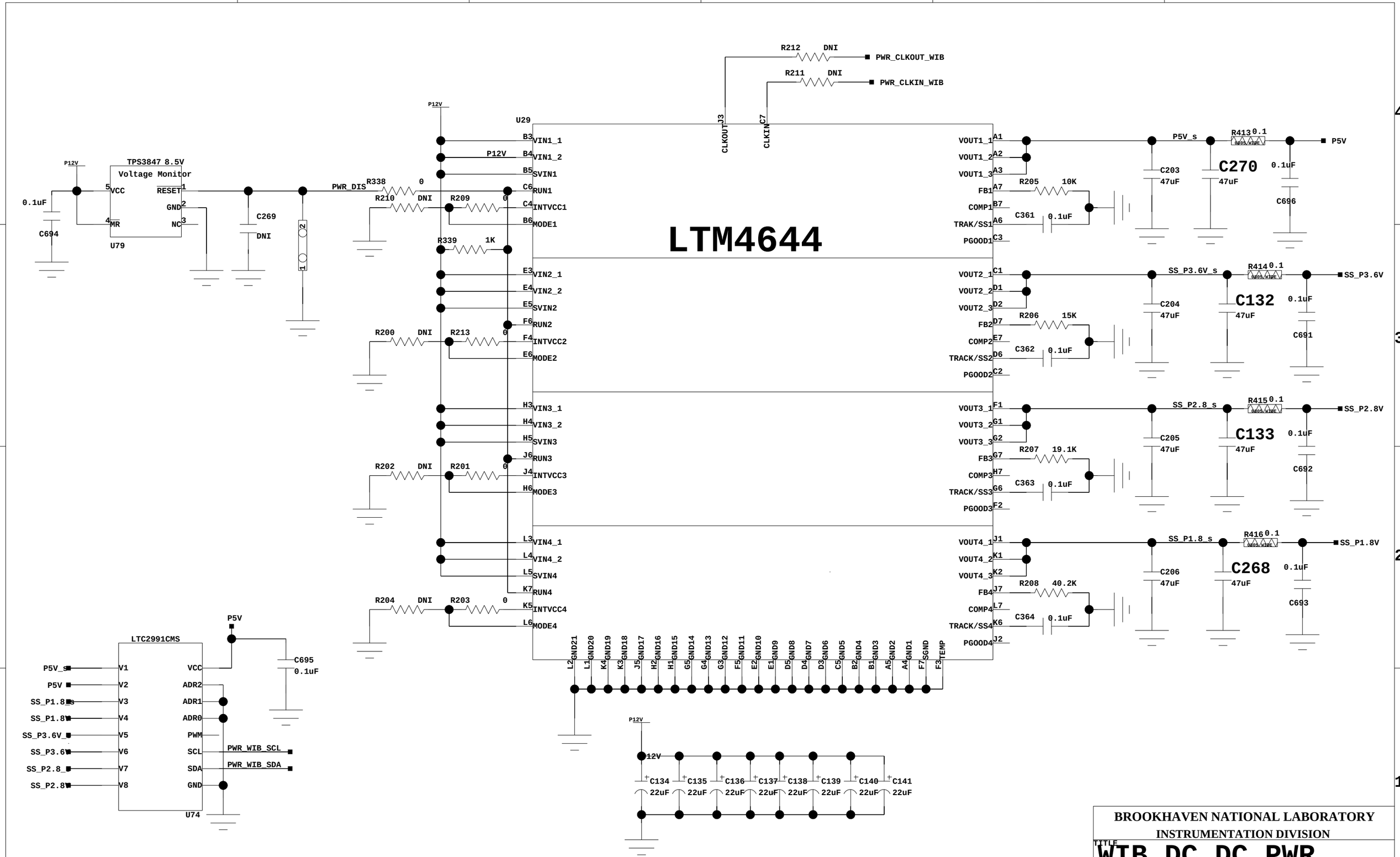

BROOKHAVEN NATIONAL LABORATORY
INSTRUMENTATION DIVISION

TITLE
WIB_DC_DC_PWR

SIZE B	BOARD : ProtoDUNE_WIB
DRAWN : Jack Fried	DATE : 28/02/2017:17:30

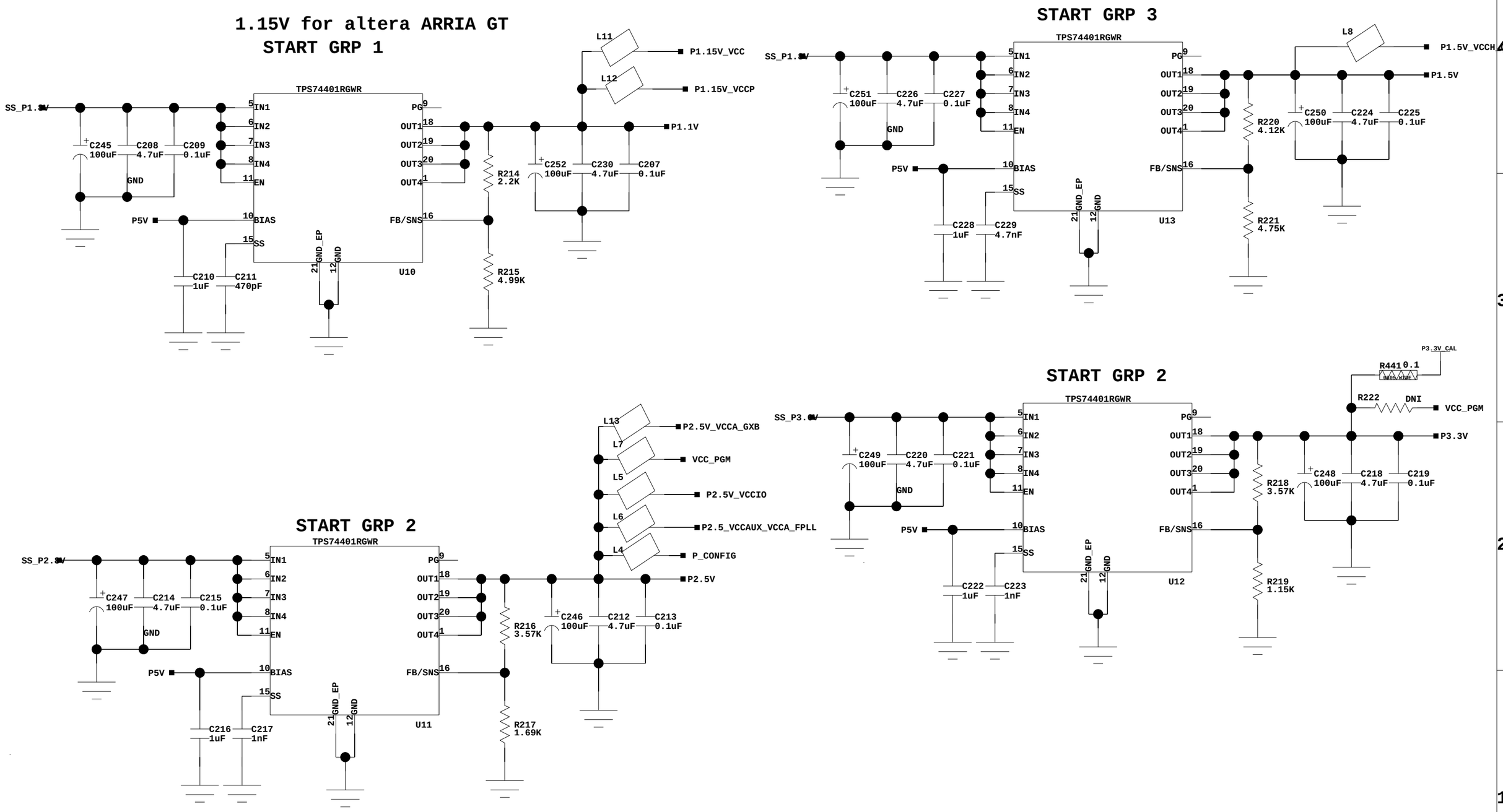

BROOKHAVEN NATIONAL LABORATORY
INSTRUMENTATION DIVISION

TITLE
WIB_LINEAR_PWR_1

SIZE B	BOARD : ProtoDUNE_WIB
DRAWN : Jack Fried	DATE : 28/02/2017:17:30

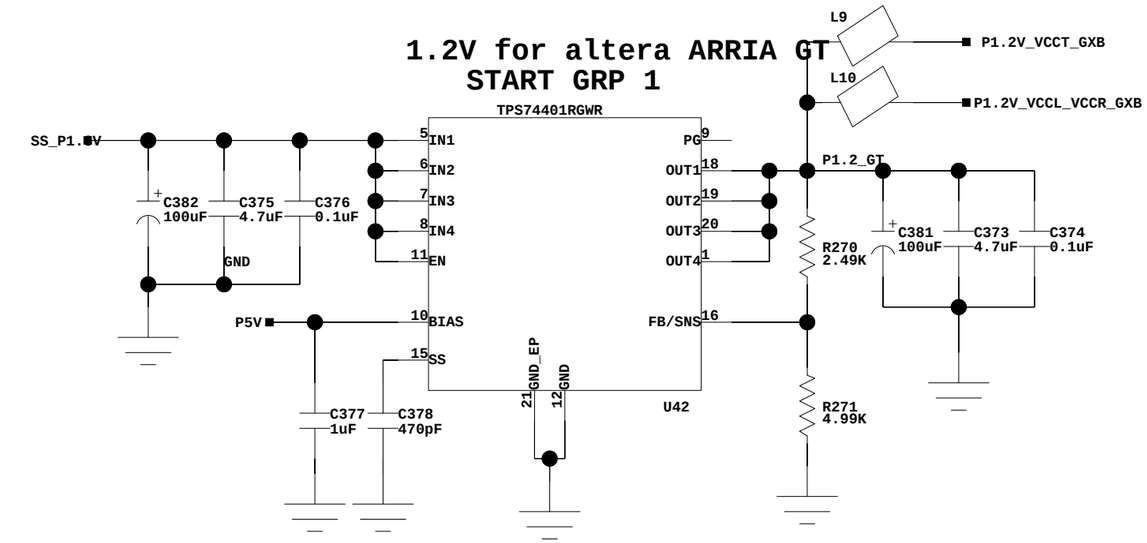

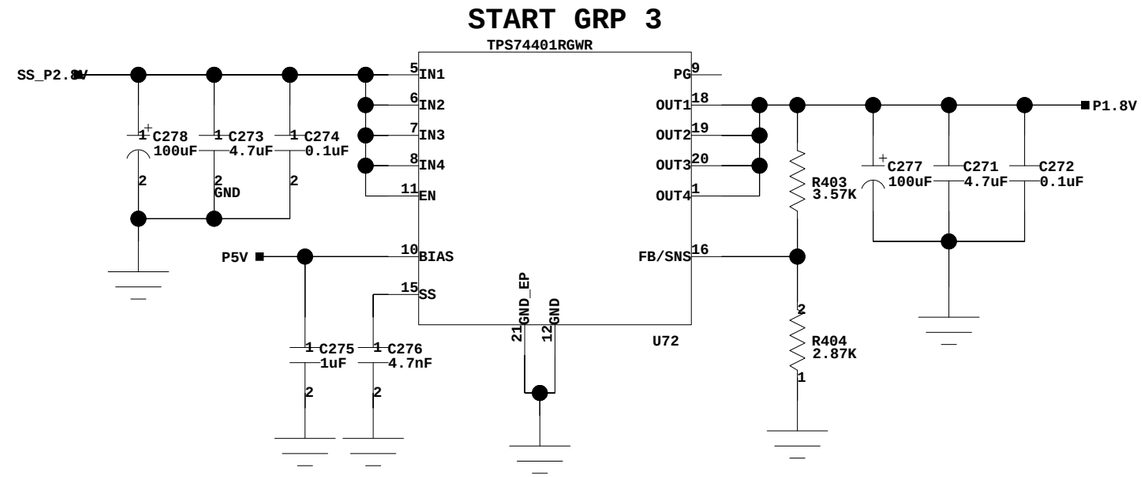

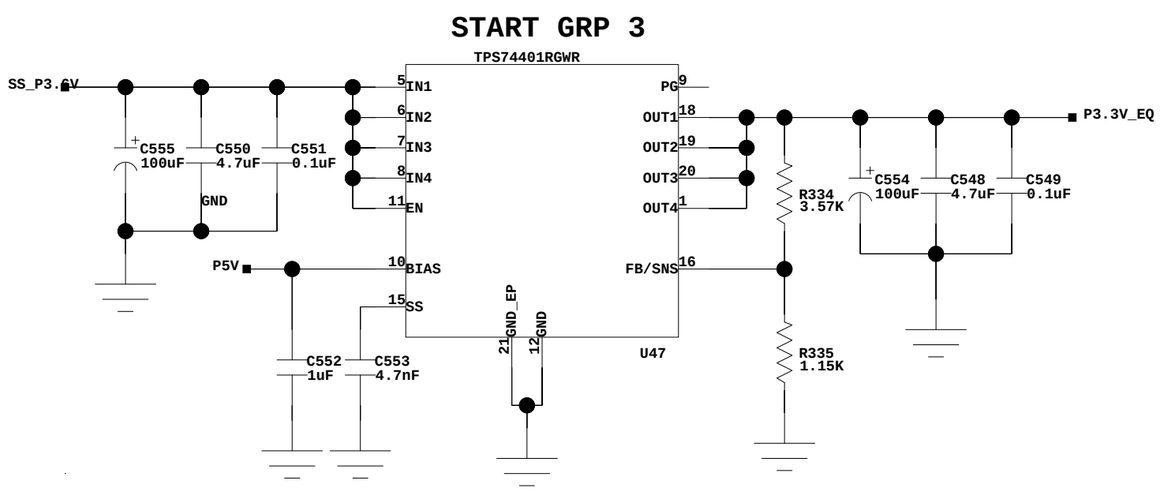

BROOKHAVEN NATIONAL LABORATORY
INSTRUMENTATION DIVISION

TITLE
WIB_LINEAR_PWR_2

SIZE B	BOARD : ProtoDUNE_WIB
DRAWN : Jack Fried	DATE : 28/02/2017:17:30

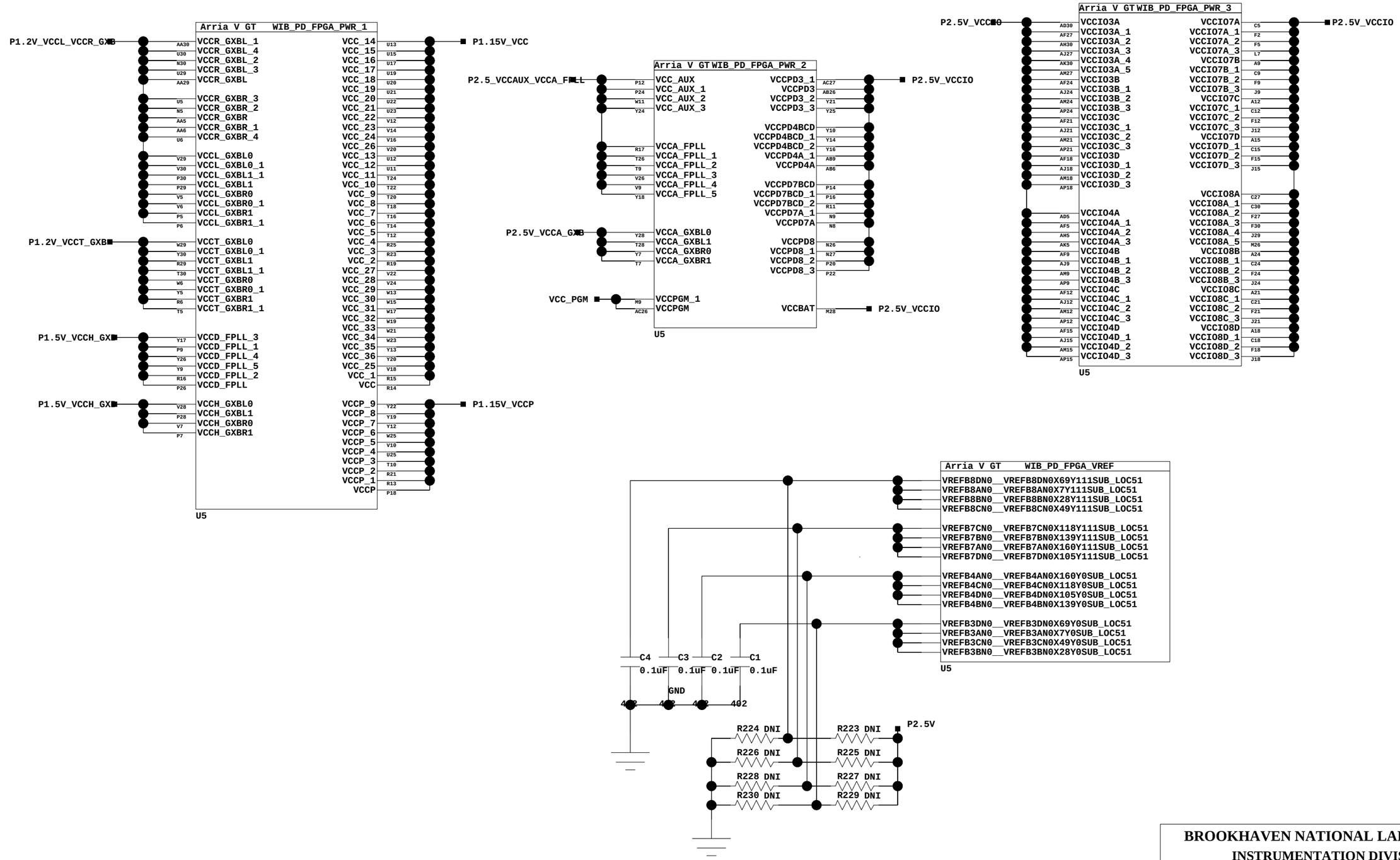

BROOKHAVEN NATIONAL LABORATORY
INSTRUMENTATION DIVISION

TITLE
WIB_FPGA_PWR

SIZE B	BOARD : ProtoDUNE_WIB
DRAWN : Jack Fried	DATE : 28/02/2017:17:30

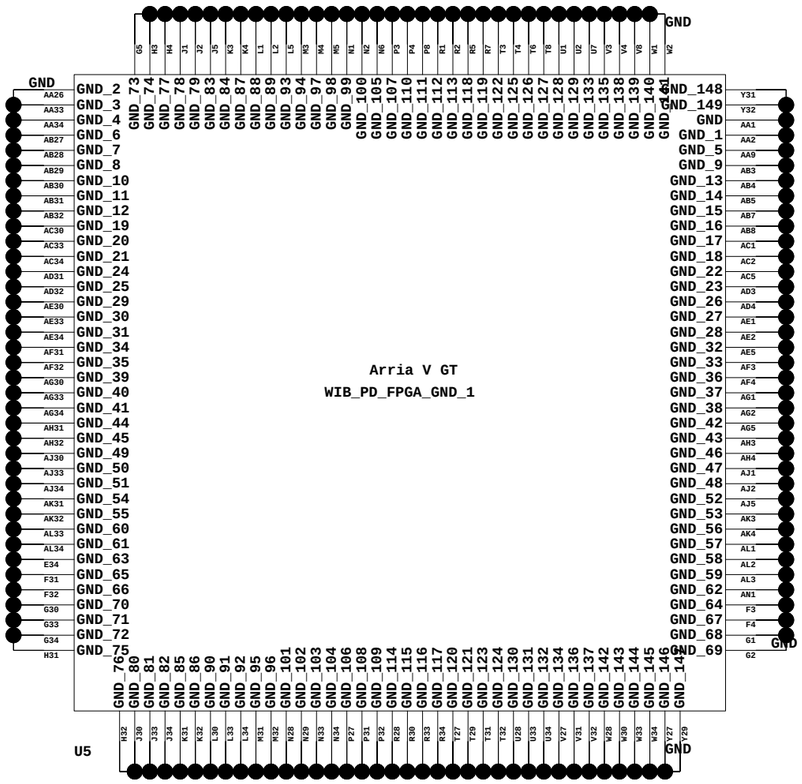

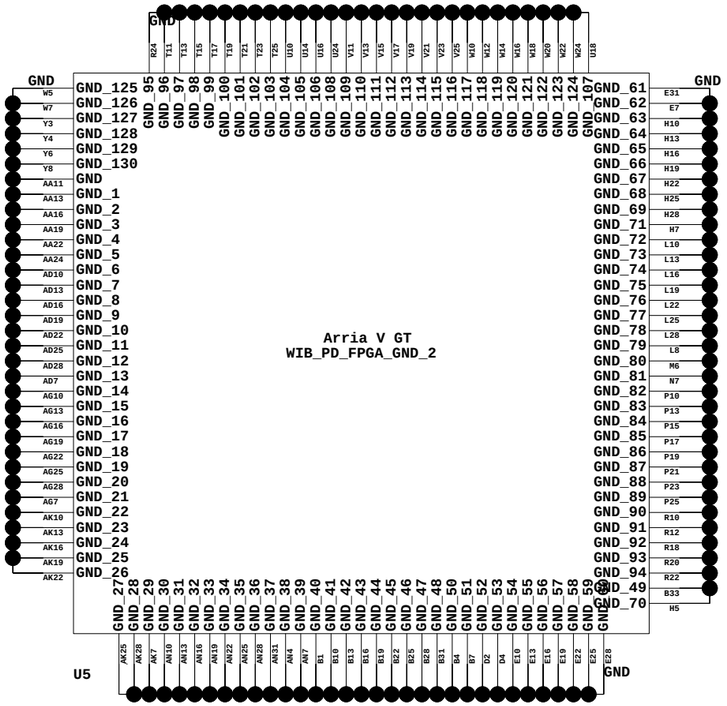

BROOKHAVEN NATIONAL LABORATORY
INSTRUMENTATION DIVISION

TITLE **WIB_FPGA_GND**

SIZE B	BOARD : ProtoDUNE_WIB
DRAWN : Jack Fried	DATE : 28/02/2017:17:30

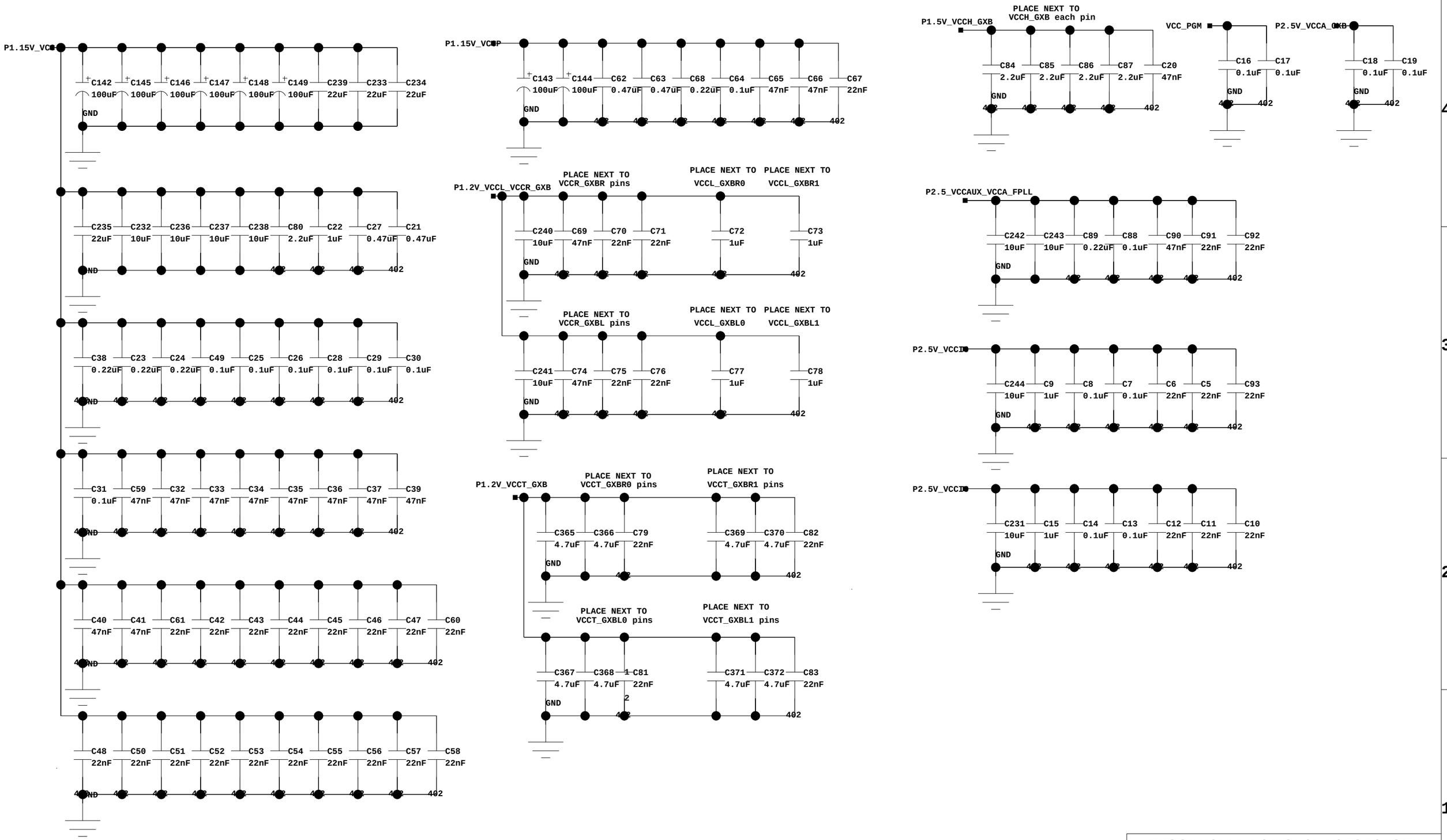

BROOKHAVEN NATIONAL LABORATORY
INSTRUMENTATION DIVISION

TITLE
WIB_FPGA_DECOUPLING

SIZE B	BOARD : ProtoDUNE_WIB
DRAWN : Jack Fried	DATE : 28/02/2017:17:30

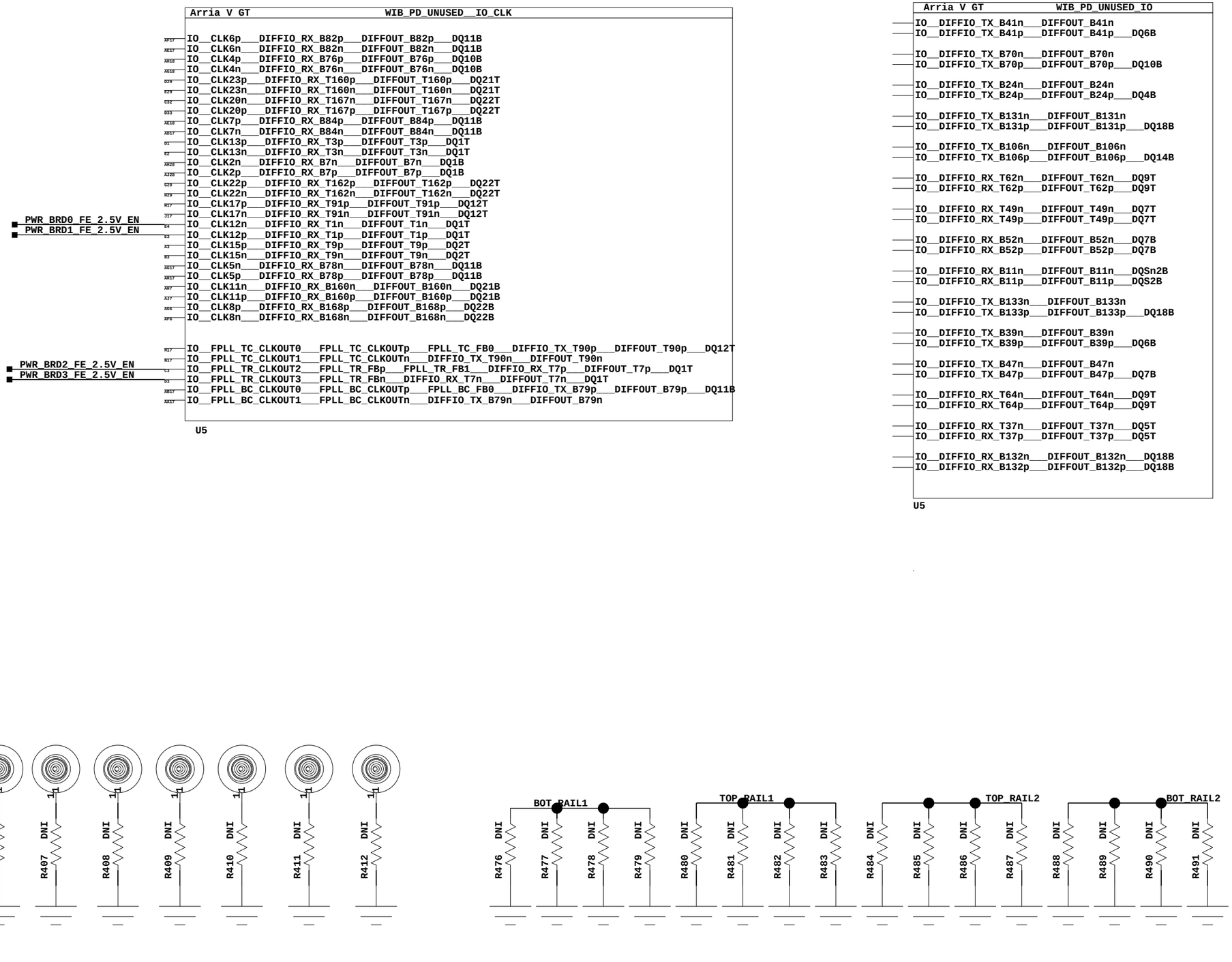

BROOKHAVEN NATIONAL LABORATORY

INSTRUMENTATION DIVISION

TITLE

WIB_FPGA_EXTRA_IO

SIZE B	BOARD : ProtoDUNE_WIB
DRAWN : Jack Fried	DATE : 28/02/2017:17:30