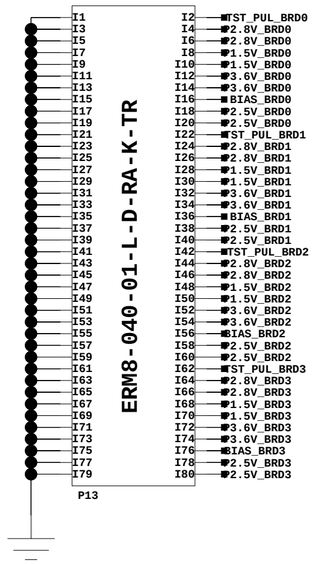

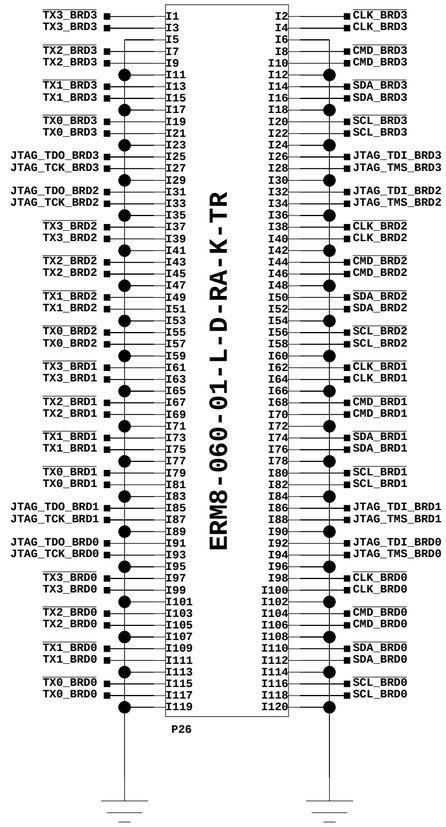

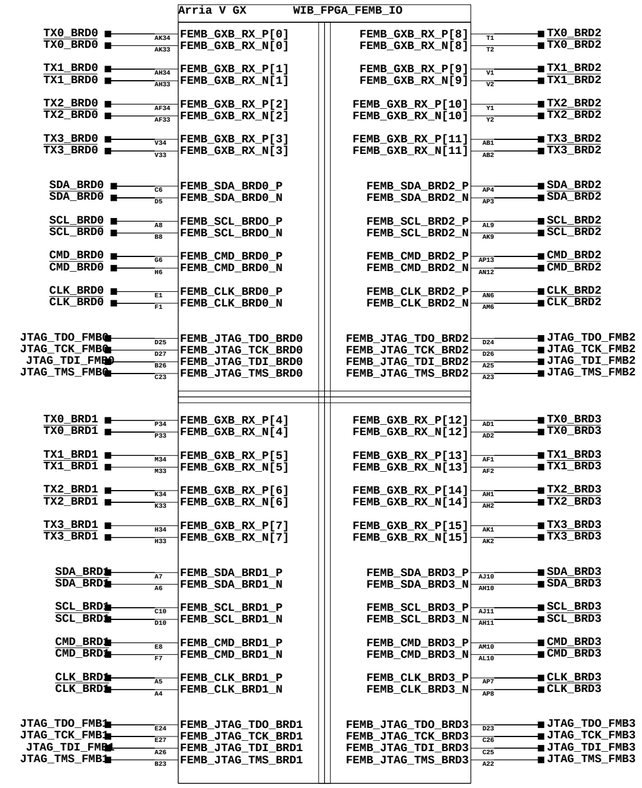

NEXT TO FPGA

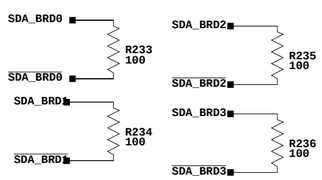

FRONT PANNEL

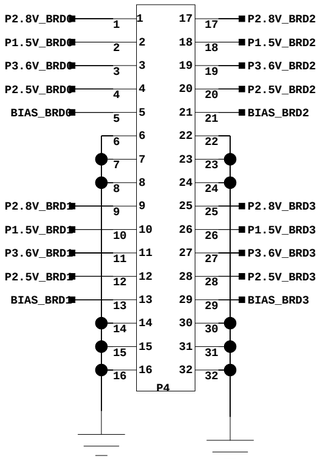

FRONT PANNEL

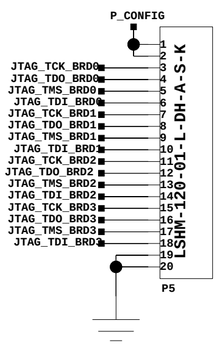

Ask about placment

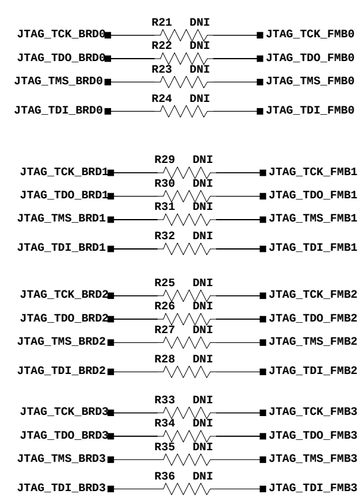

DIFF PAIRS

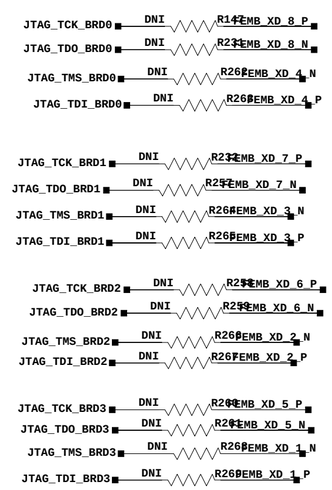

BROOKHAVEN NATIONAL LABORATORY
INSTRUMENTATION DIVISION
BLDG. 535B
UPTON N.Y. 11973

WIB_FLANGE_IO

Date: 28/02/2016:01:44

DRAWN BY: Jack Fried

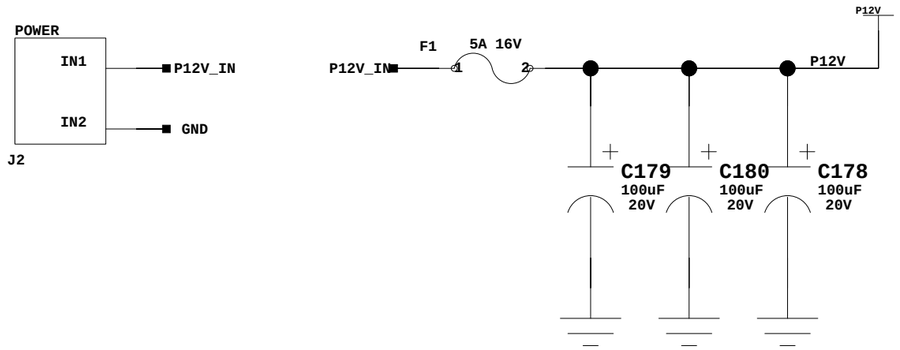

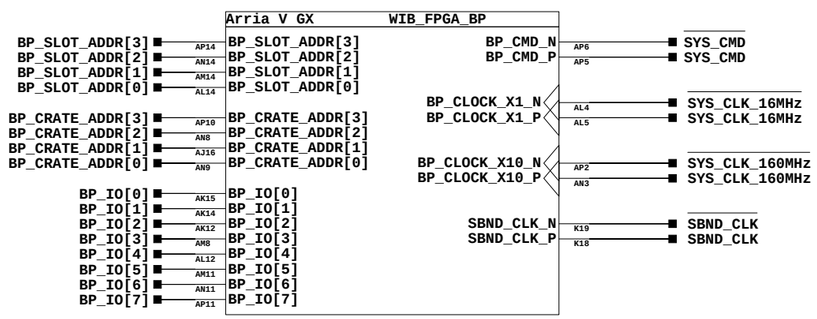

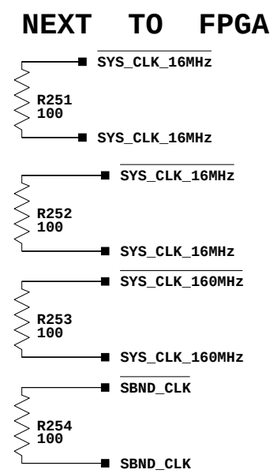

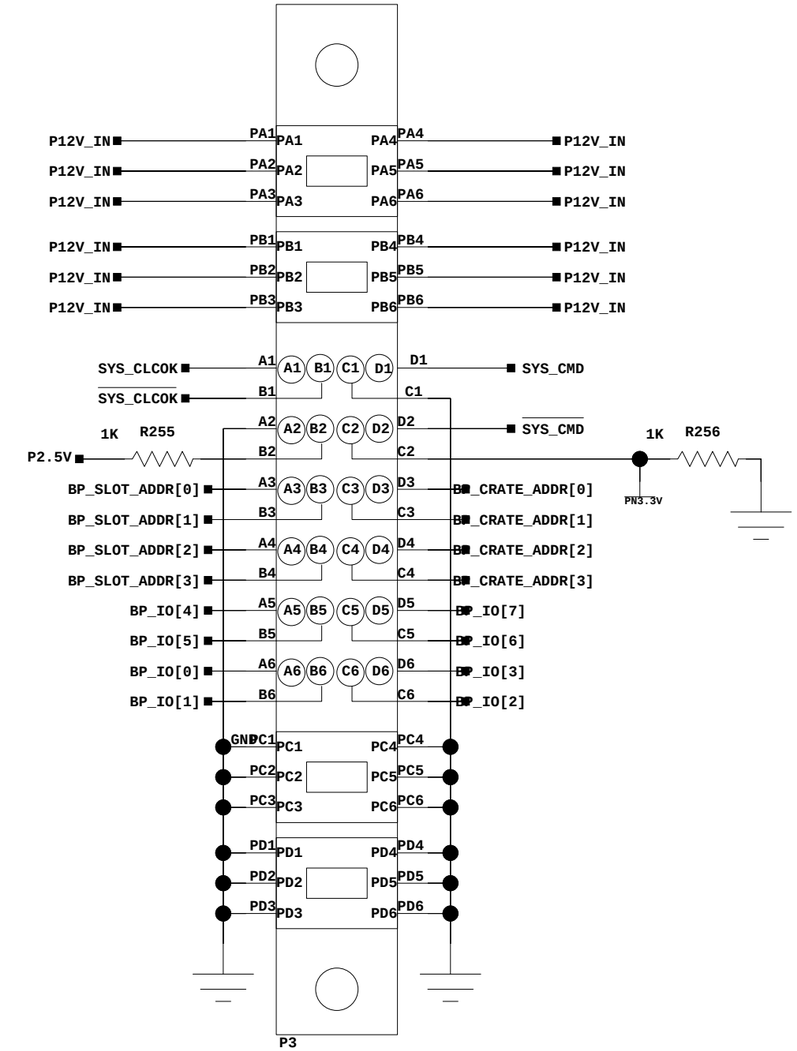

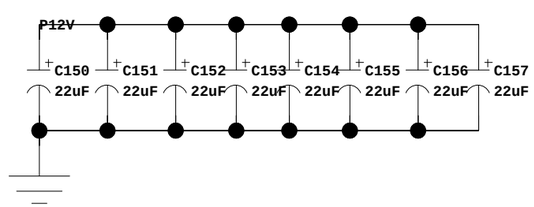

BROOKHAVEN NATIONAL LABORATORY
INSTRUMENTATION DIVISION
BLDG. 535B
UPTON N.Y. 11973

WIB_PWR_BACK_PLANE

Date: 28/12/2015:12:42

DRAWN BY: Jack Fried

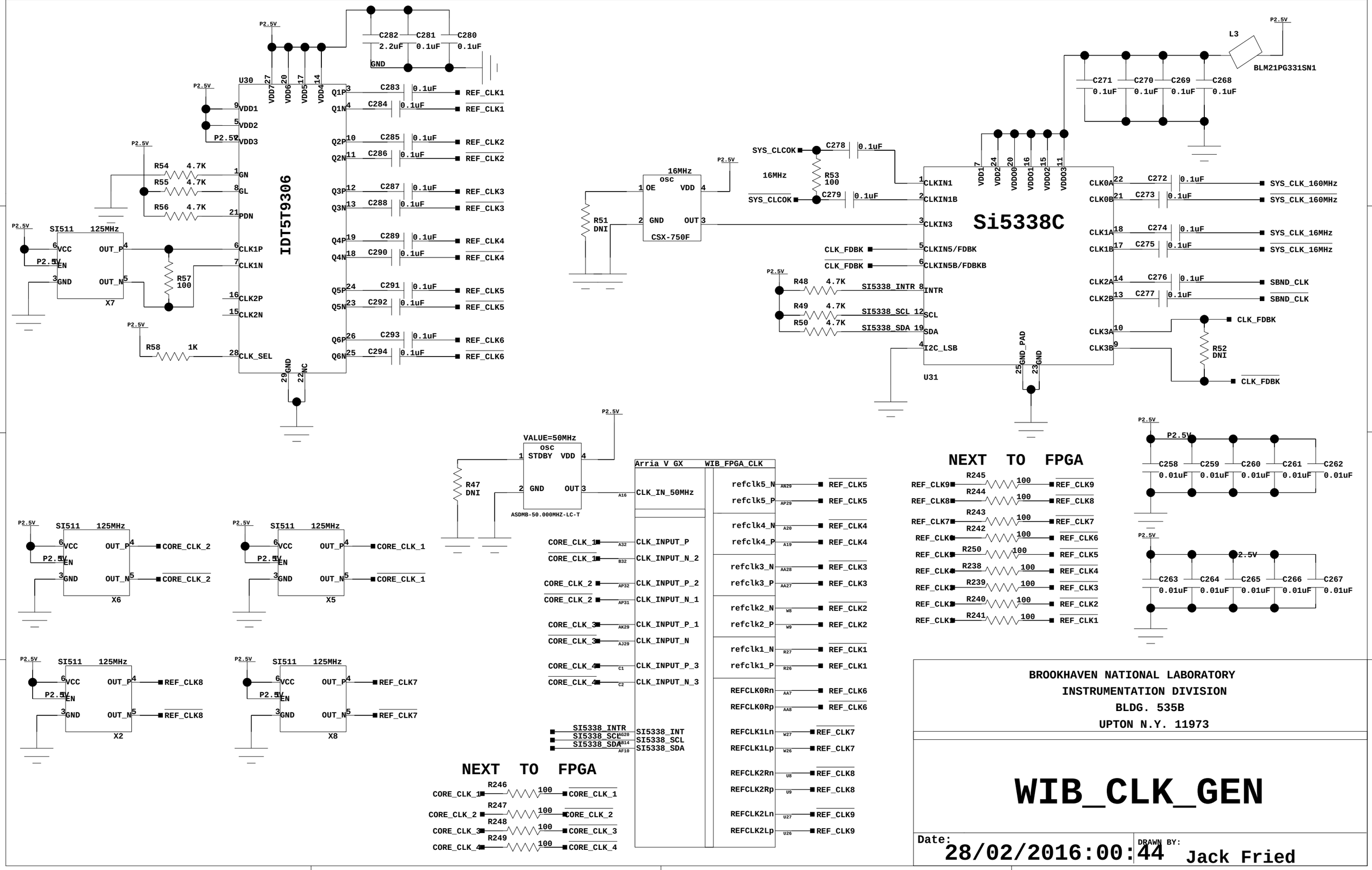

BROOKHAVEN NATIONAL LABORATORY
INSTRUMENTATION DIVISION
BLDG. 535B
UPTON N.Y. 11973

WIB_CLK_GEN

Date: 28/02/2016:00:44

DRAWN BY: Jack Fried

FRONT PANNEL

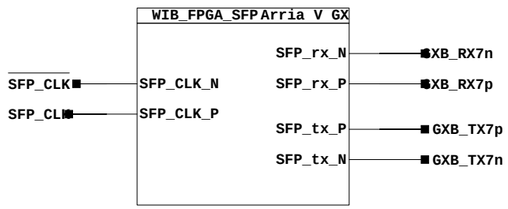

NEXT TO FPGA

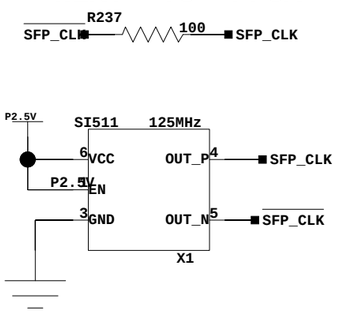

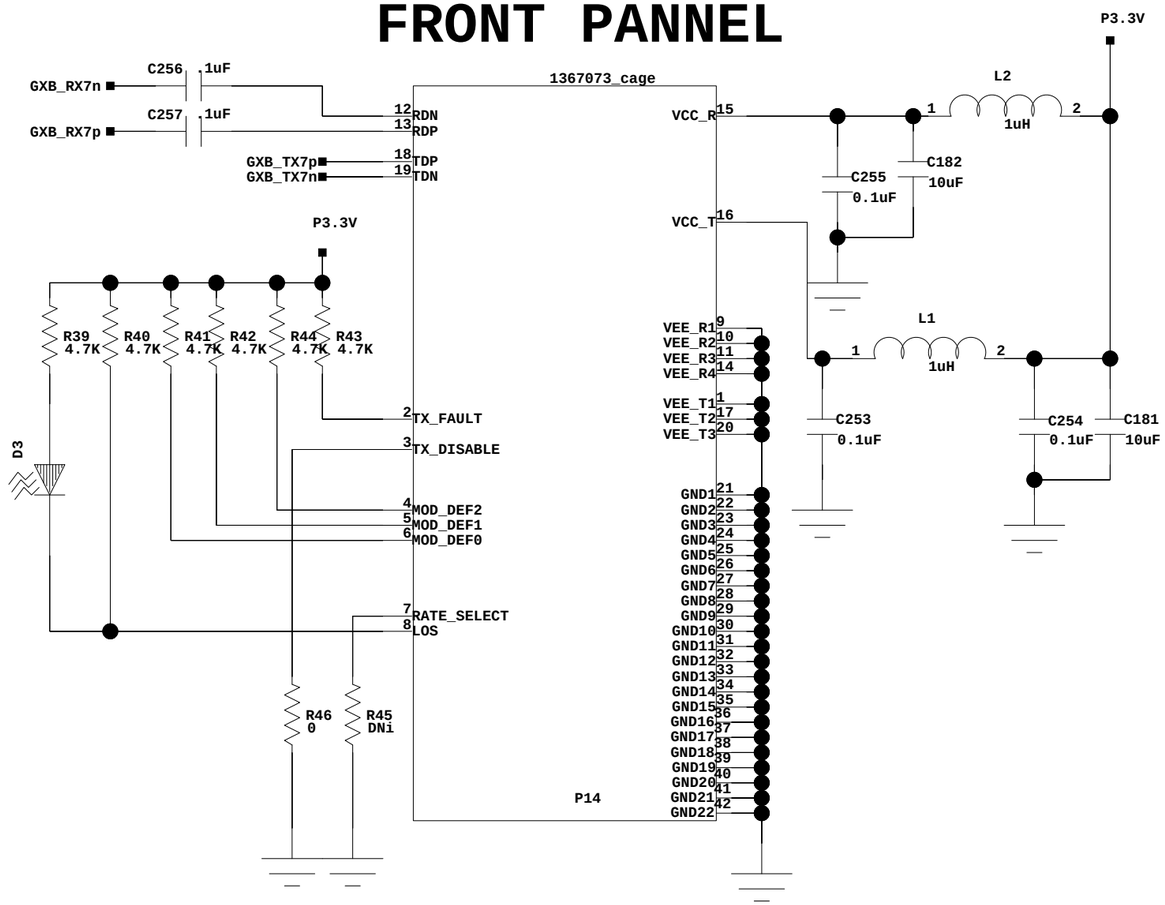

BROOKHAVEN NATIONAL LABORATORY
INSTRUMENTATION DIVISION
BLDG. 535B
UPTON N.Y. 11973

WIB_ETHERNET_SFP

Date: 28/02/2016:00:37

DRAWN BY: Jack Fried

FRONT PANNEL (ONLY IF IT FITS)

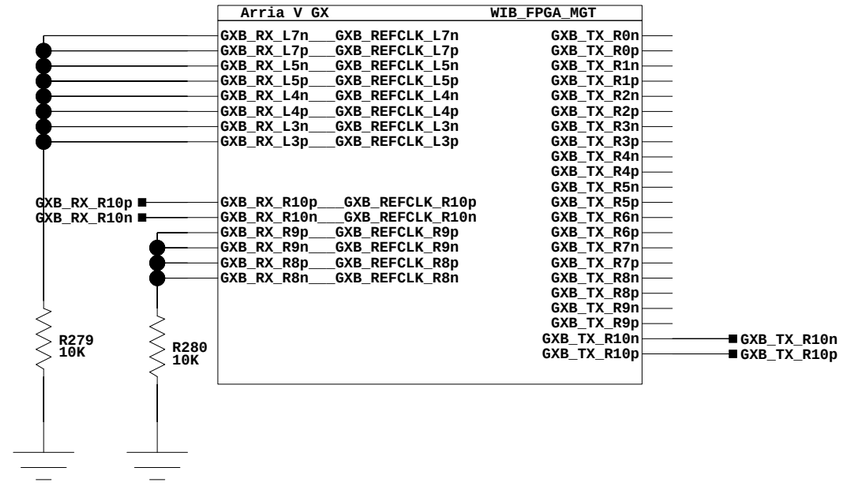

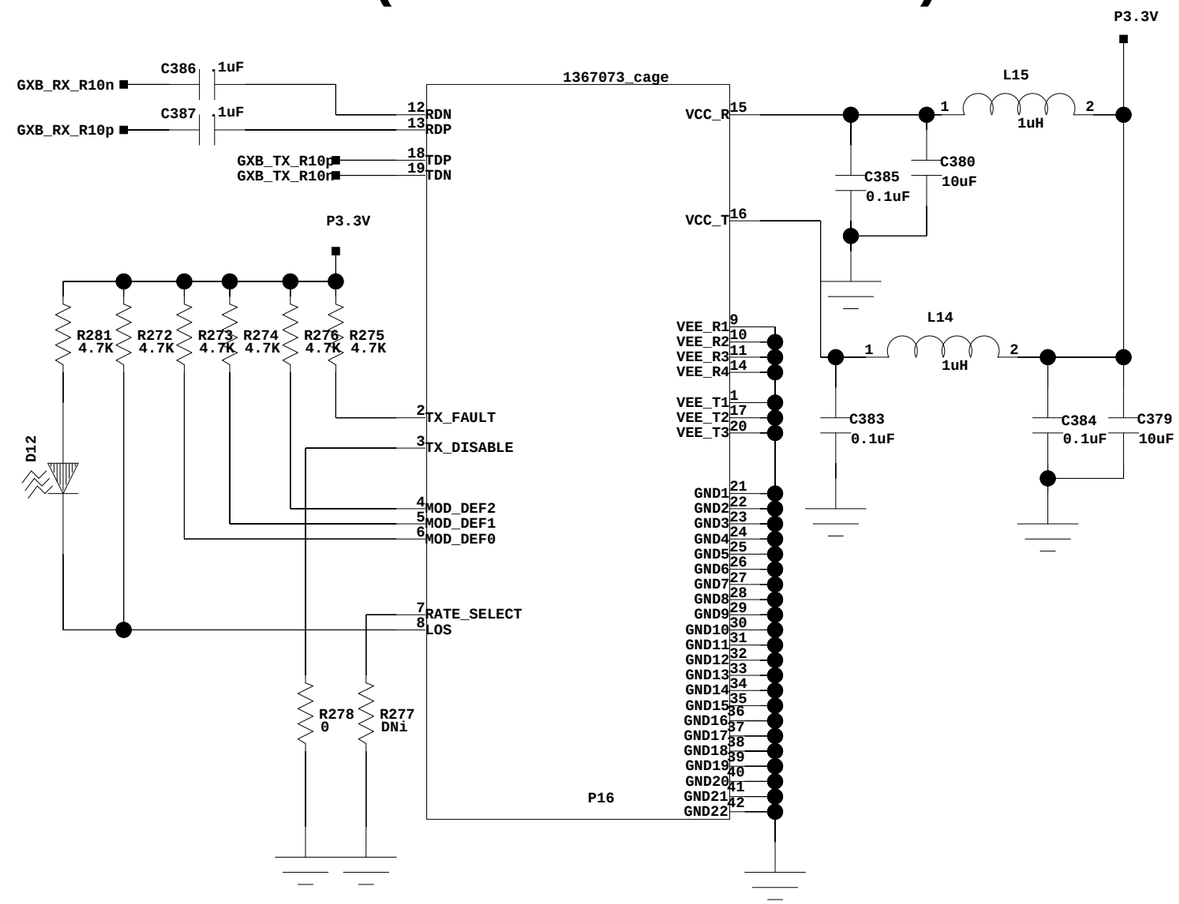

NEXT TO FPGA

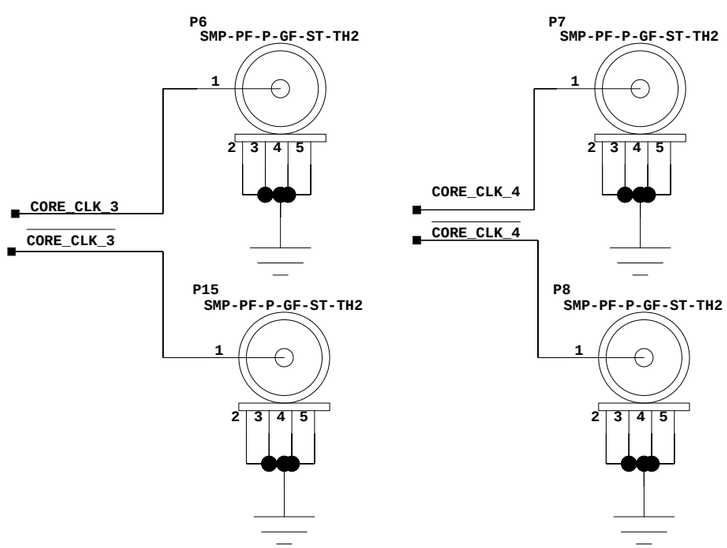

BROOKHAVEN NATIONAL LABORATORY
INSTRUMENTATION DIVISION
BLDG. 535B
UPTON N.Y. 11973

WIB_DAQ_SFP

Date: 28/02/2016:01:42

DRAWN BY: Jack Fried

FRONT PANNEL

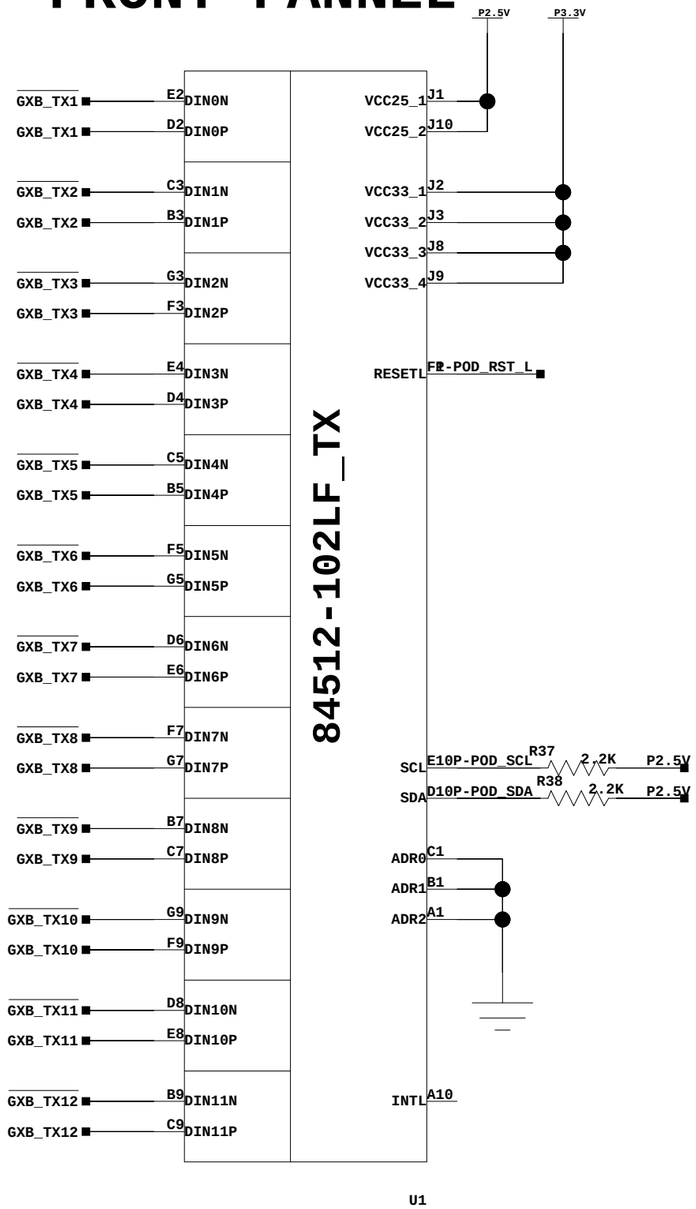

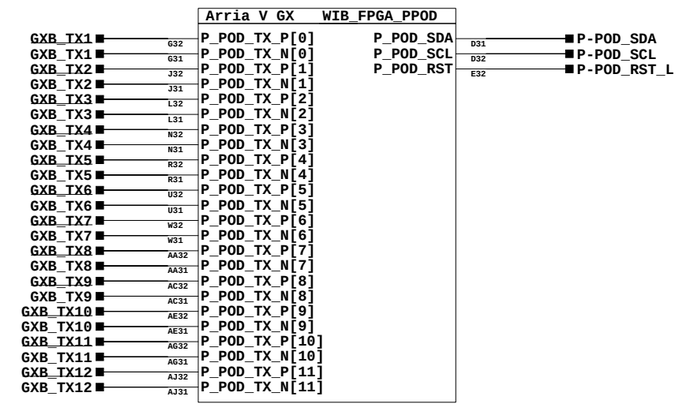

BROOKHAVEN NATIONAL LABORATORY
INSTRUMENTATION DIVISION
BLDG. 535B
UPTON N.Y. 11973

WIB_P_POD

Date: 13/01/2016:10:46

DRAWN BY: Jack Fried

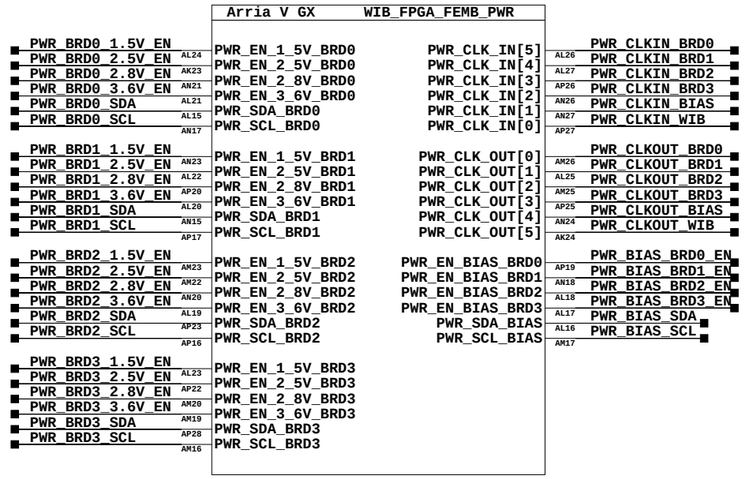

BROOKHAVEN NATIONAL LABORATORY
INSTRUMENTATION DIVISION
BLDG. 535B
UPTON N.Y. 11973

WIB_FEMB_PWR_CNTL

Date: 28/12/2015:12:32

DRAWN BY: Jack Fried

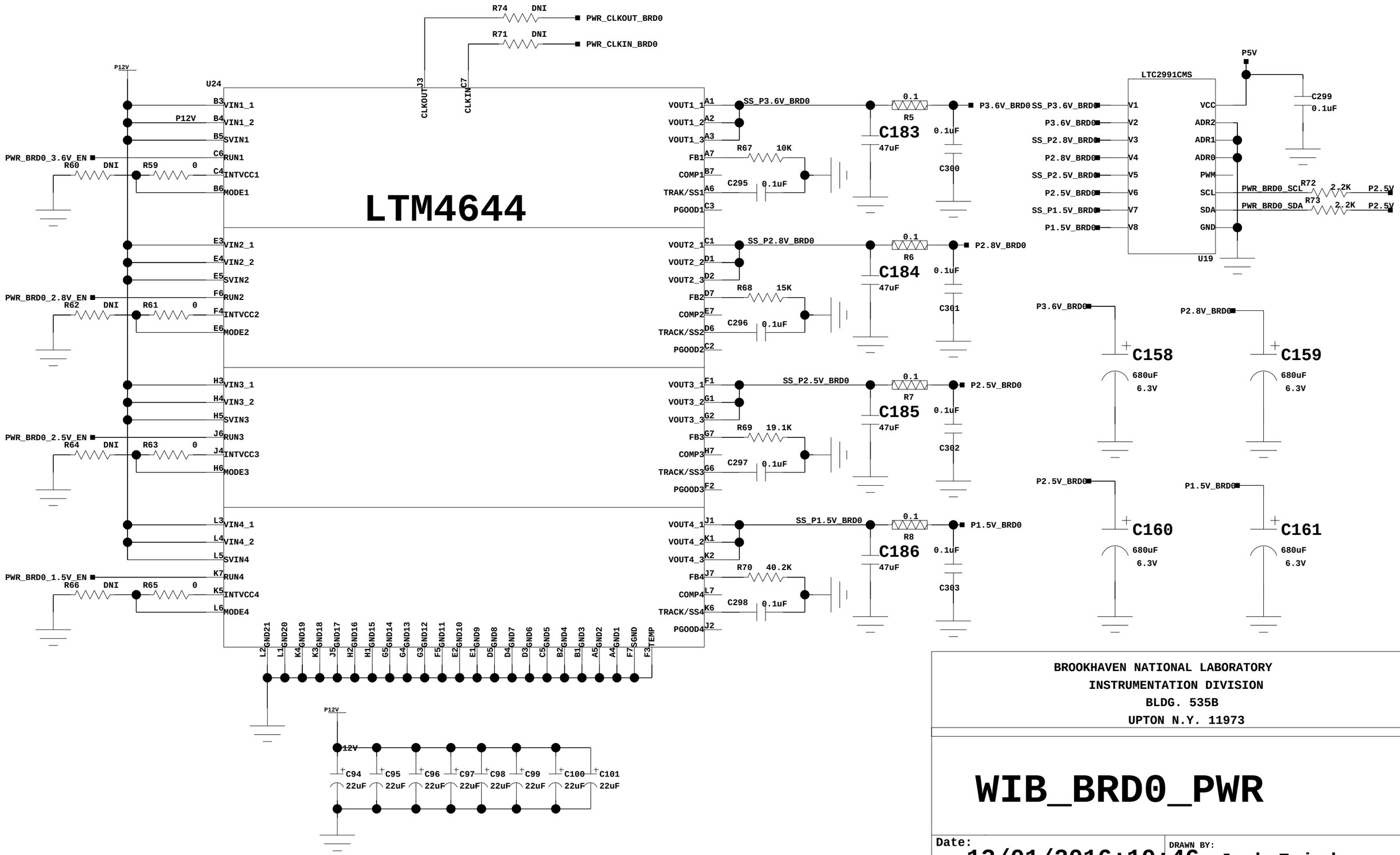

BROOKHAVEN NATIONAL LABORATORY
INSTRUMENTATION DIVISION
BLDG. 535B
UPTON N.Y. 11973

WIB_BRD0_PWR

Date: 13/01/2016:10:46

DRAWN BY: Jack Fried

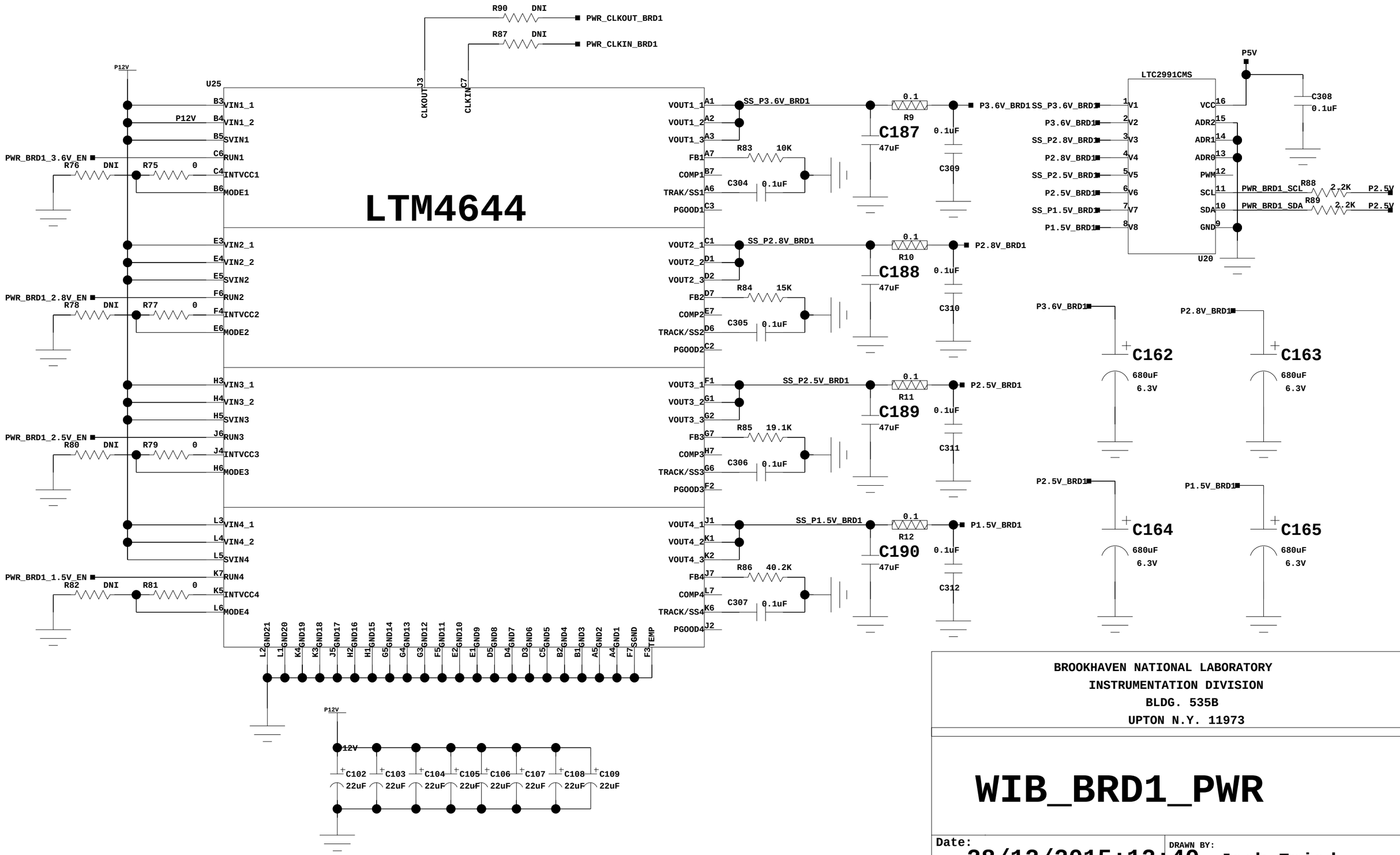

BROOKHAVEN NATIONAL LABORATORY
INSTRUMENTATION DIVISION
BLDG. 535B
UPTON N.Y. 11973

WIB_BRD1_PWR

Date: 28/12/2015:12:40

DRAWN BY: Jack Fried

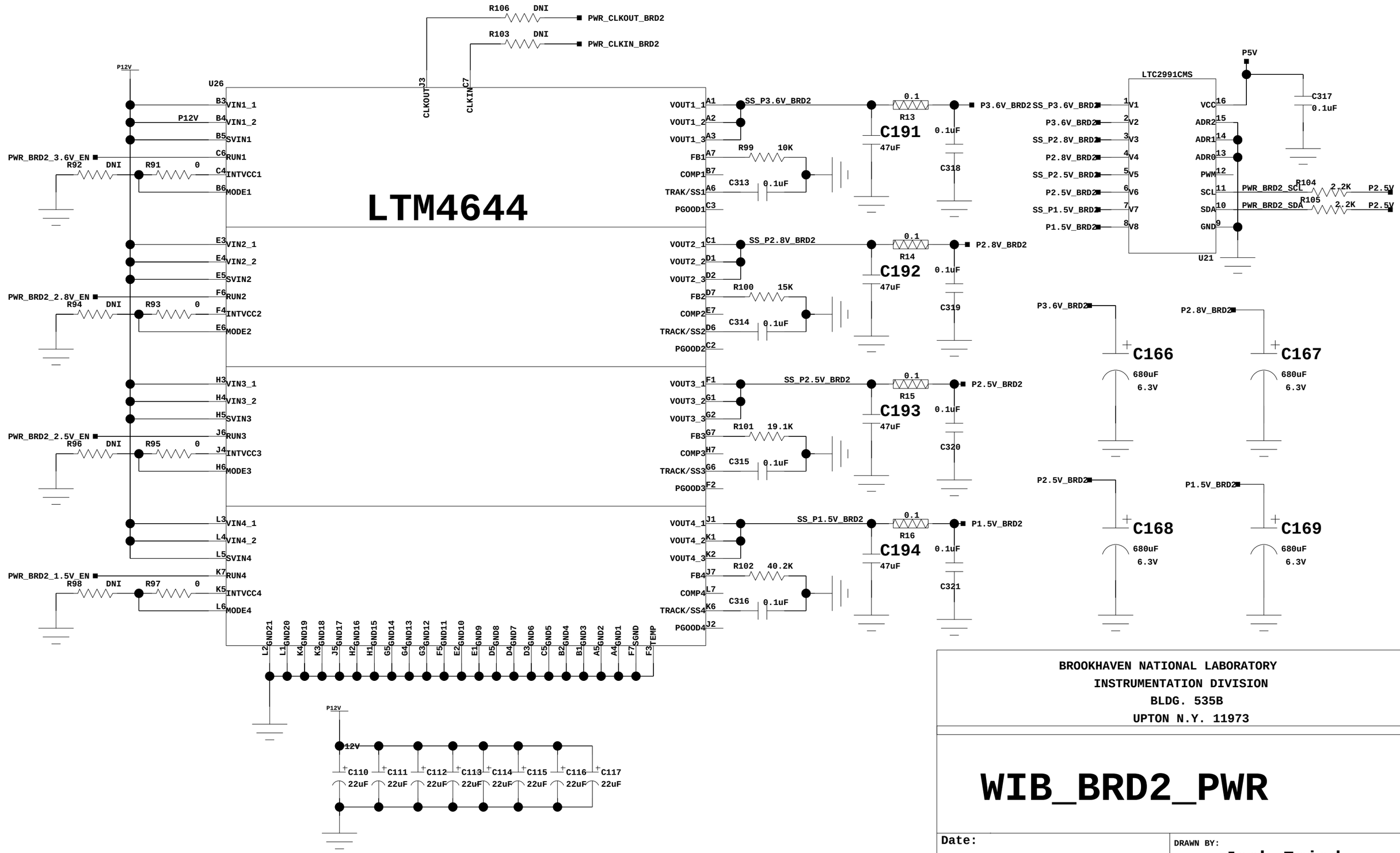

BROOKHAVEN NATIONAL LABORATORY
INSTRUMENTATION DIVISION
BLDG. 535B
UPTON N.Y. 11973

WIB_BRD2_PWR

Date:

DRAWN BY: Jack Fried

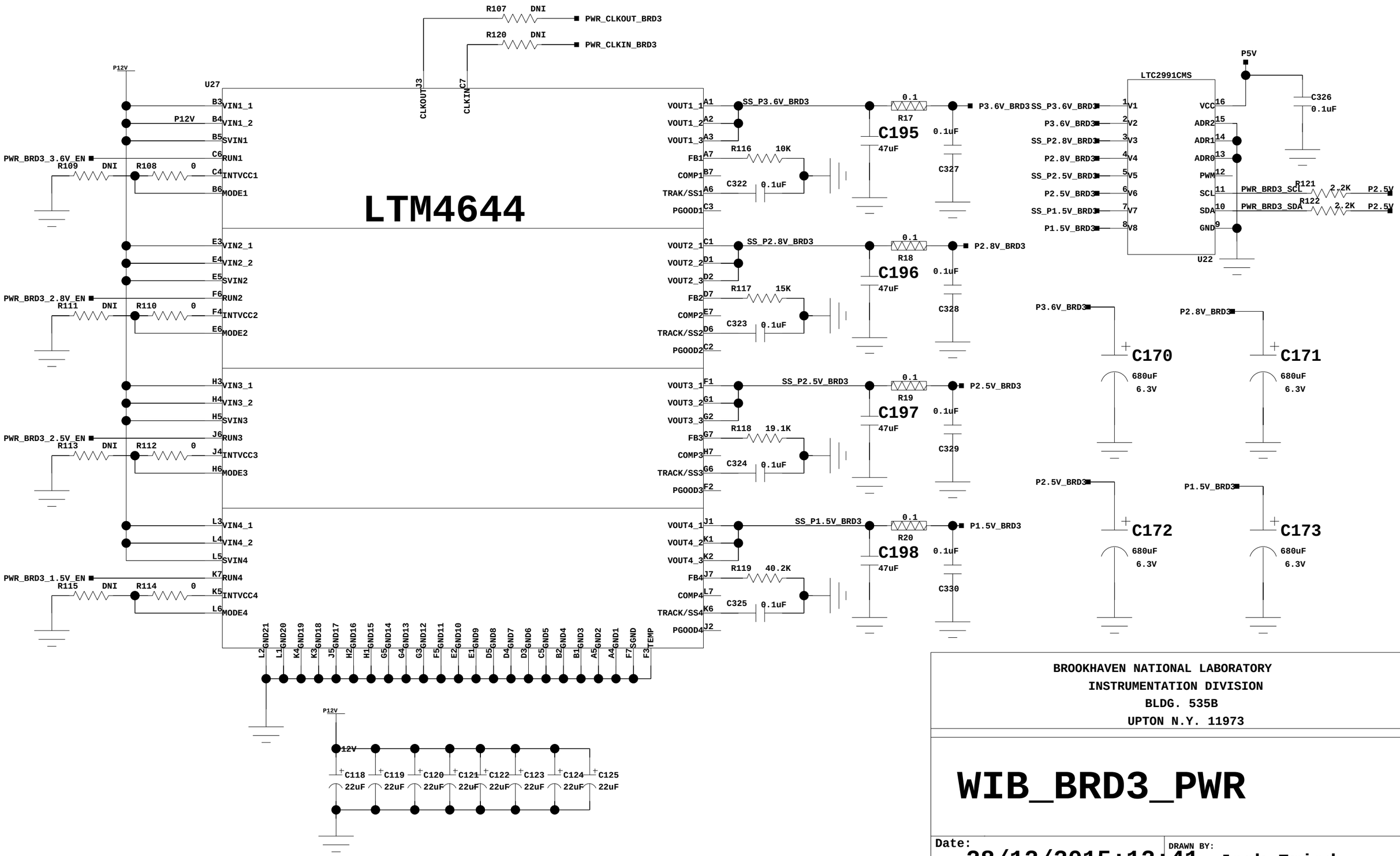

BROOKHAVEN NATIONAL LABORATORY
INSTRUMENTATION DIVISION
BLDG. 535B
UPTON N.Y. 11973

WIB_BRD3_PWR

Date: 28/12/2015:12:41

DRAWN BY: Jack Fried

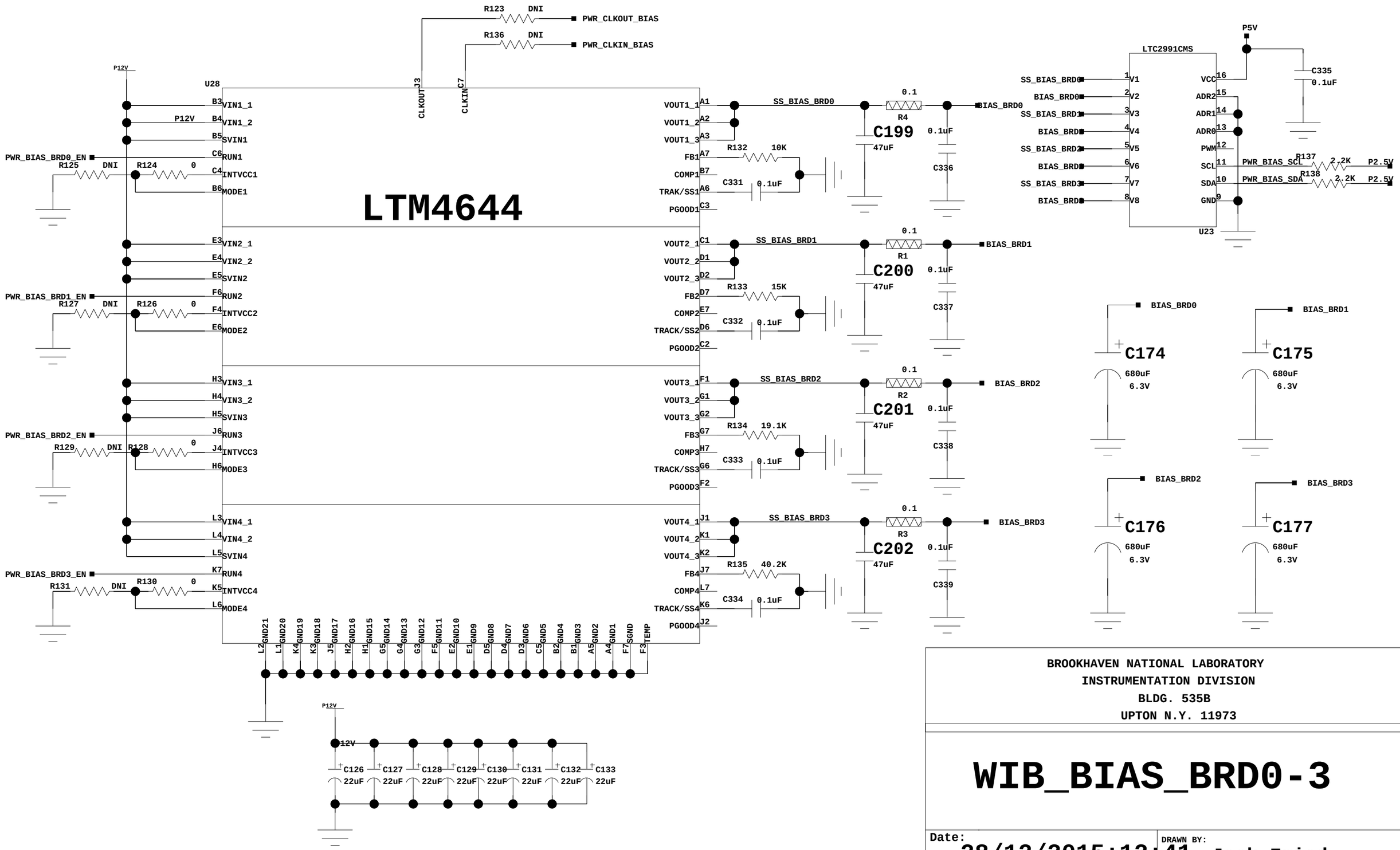

BROOKHAVEN NATIONAL LABORATORY
INSTRUMENTATION DIVISION
BLDG. 535B
UPTON N.Y. 11973

WIB_BIAS_BRD0-3

Date: 28/12/2015:12:41

DRAWN BY: Jack Fried

FRONT PANNEL

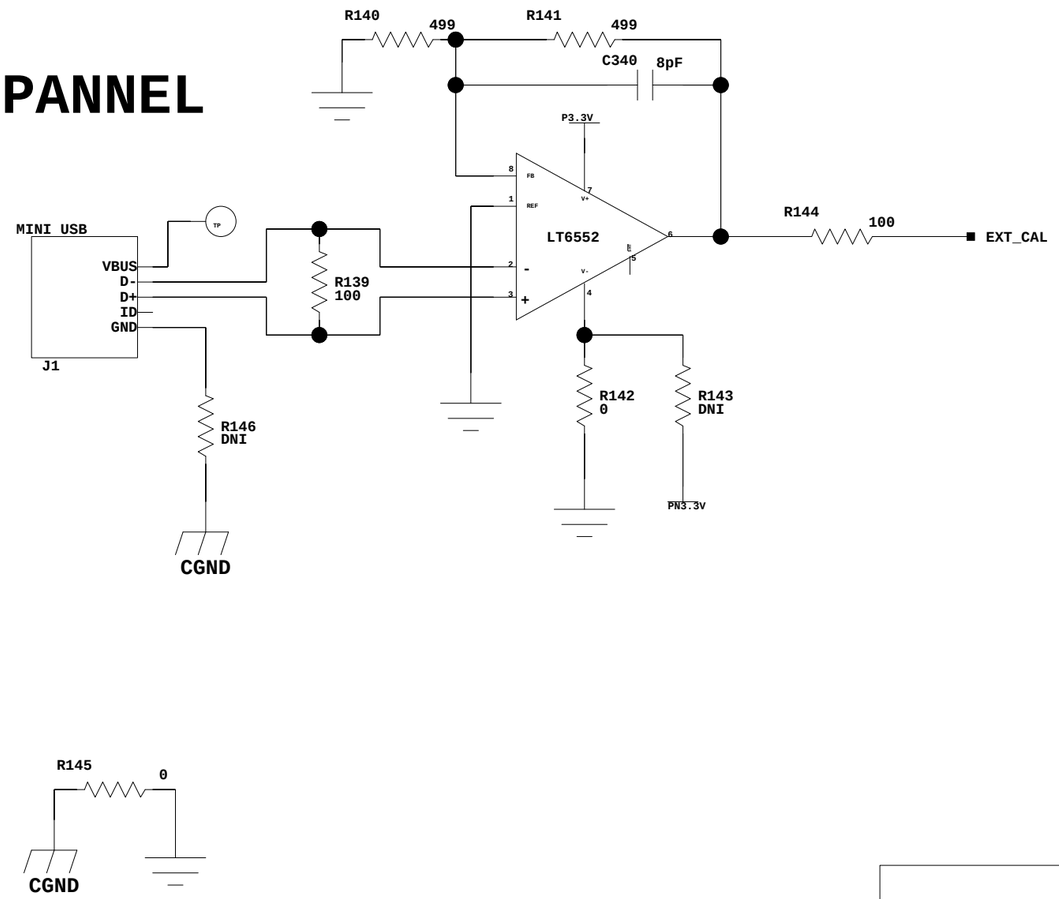

BROOKHAVEN NATIONAL LABORATORY
INSTRUMENTATION DIVISION
BLDG. 535B
UPTON N.Y. 11973

WIB EXT CALB INPUT

Date: 28/02/2016:01:42

DRAWN BY: Jack Fried

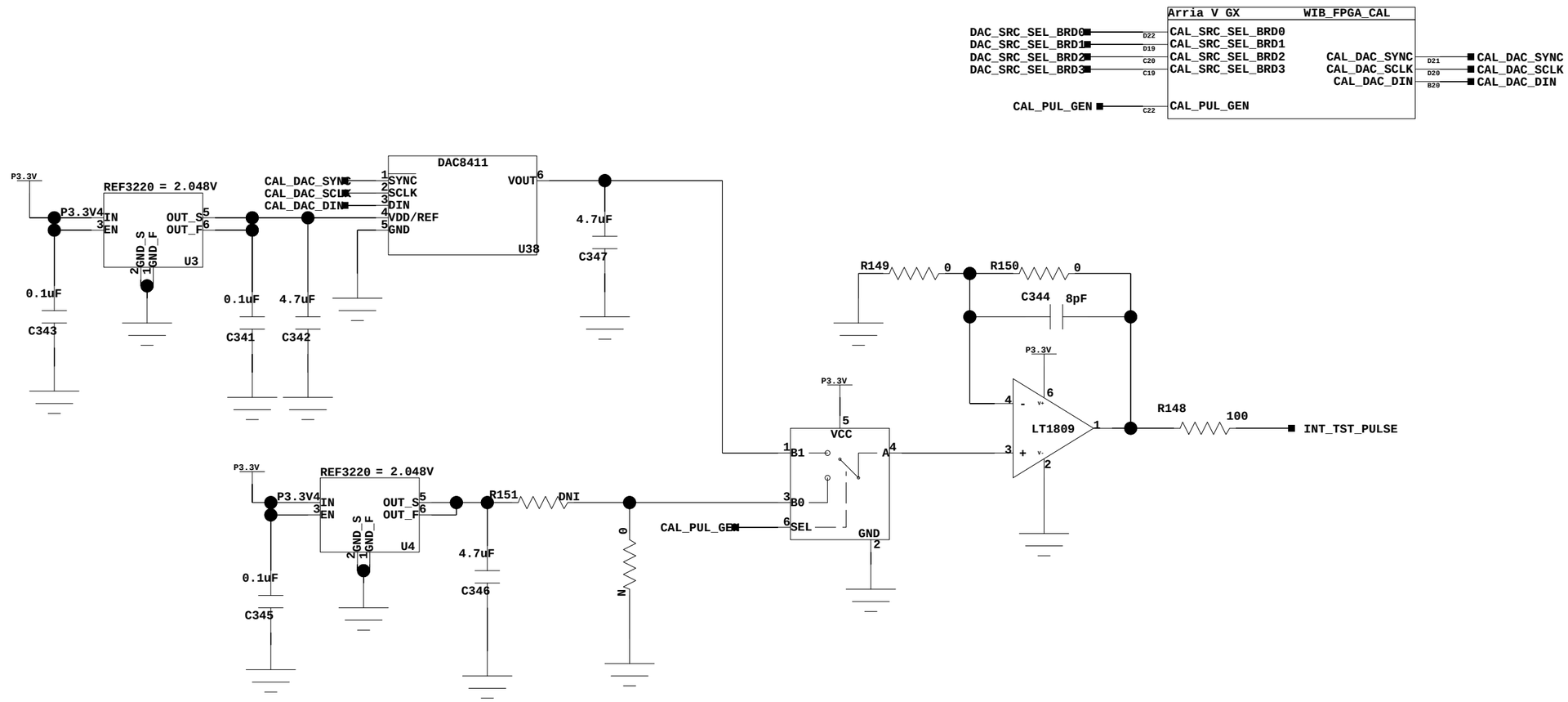

BROOKHAVEN NATIONAL LABORATORY
INSTRUMENTATION DIVISION
BLDG. 535B
UPTON N.Y. 11973

WIB INT CAL DAC

Date: 07/12/2015:16:37

DRAWN BY: Jack Fried

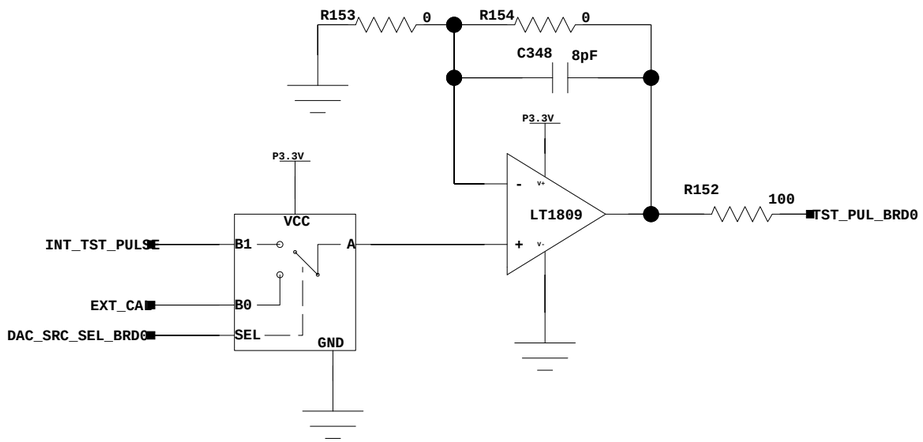

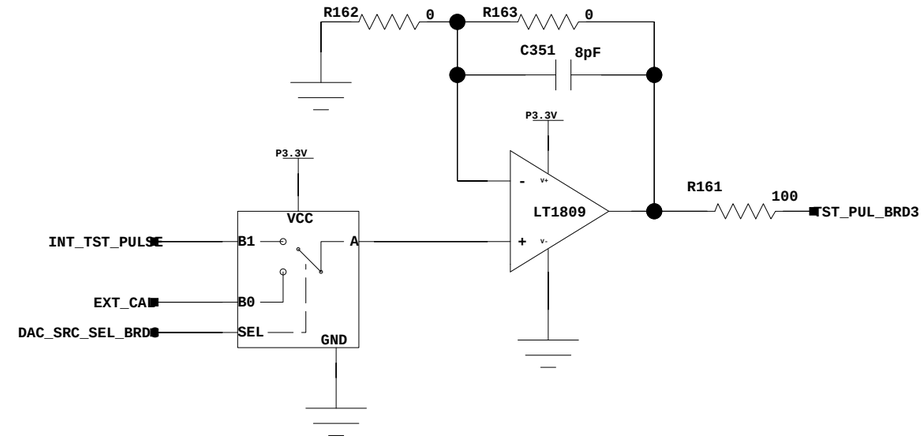

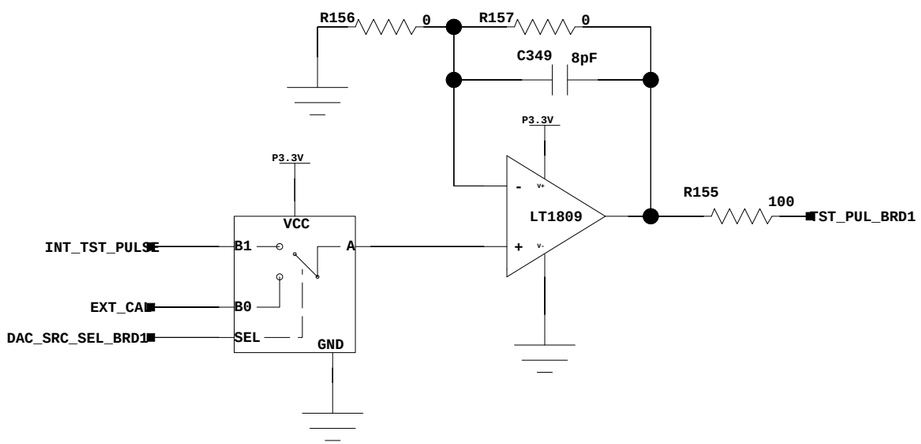

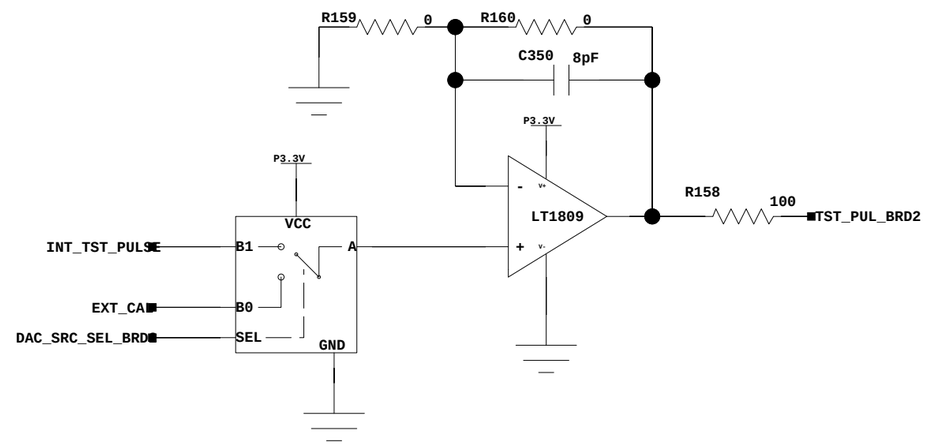

BROOKHAVEN NATIONAL LABORATORY
INSTRUMENTATION DIVISION
BLDG. 535B
UPTON N.Y. 11973

WIB_CAL_DRIVERS

Date: 13/01/2016:10:46

DRAWN BY: Jack Fried

FRONT PANNEL

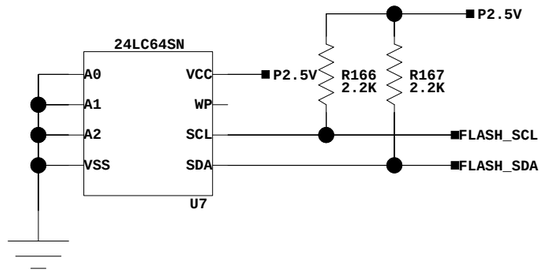

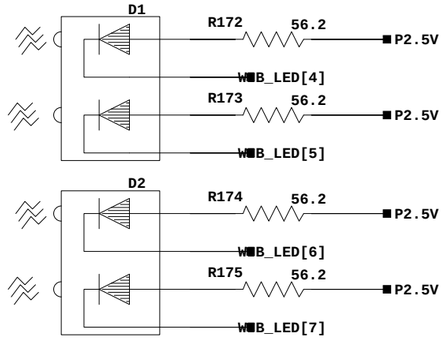

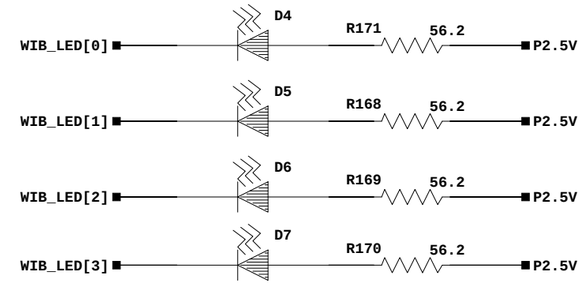

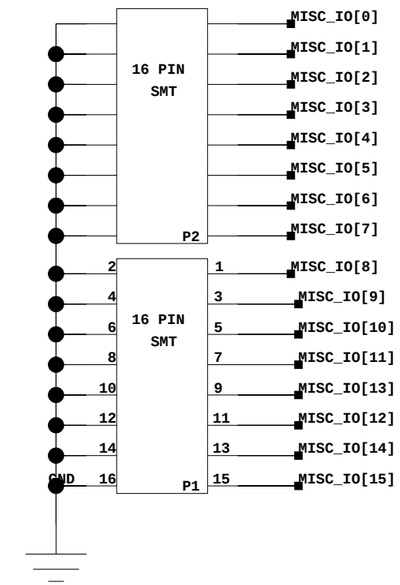

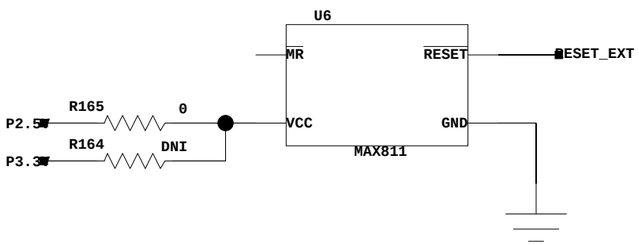

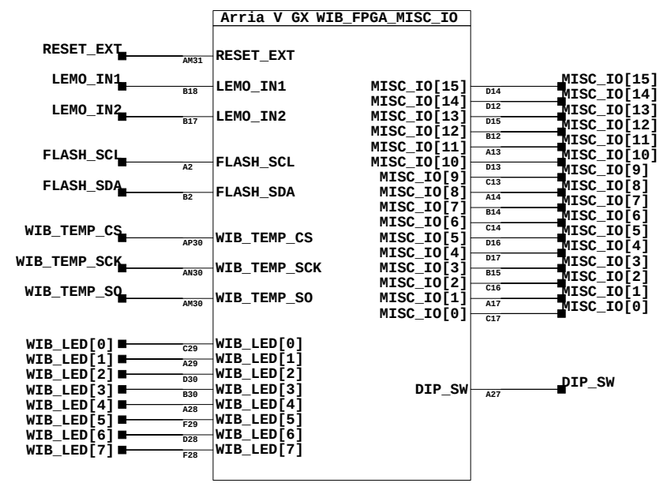

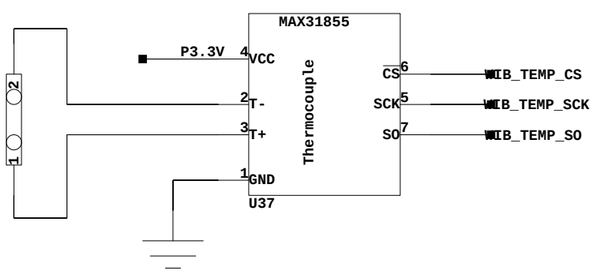

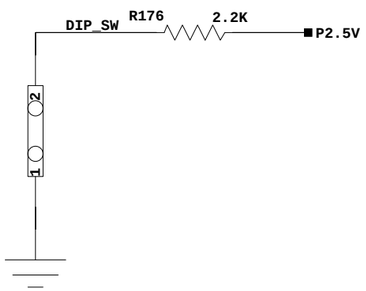

FRONT PANNEL IF IT FITS

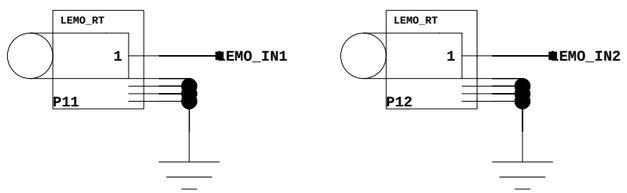

BROOKHAVEN NATIONAL LABORATORY
INSTRUMENTATION DIVISION
BLDG. 535B
UPTON N.Y. 11973

WIB_MISC_IO

Date: 28/02/2016:01:34

DRAWN BY: Jack Fried

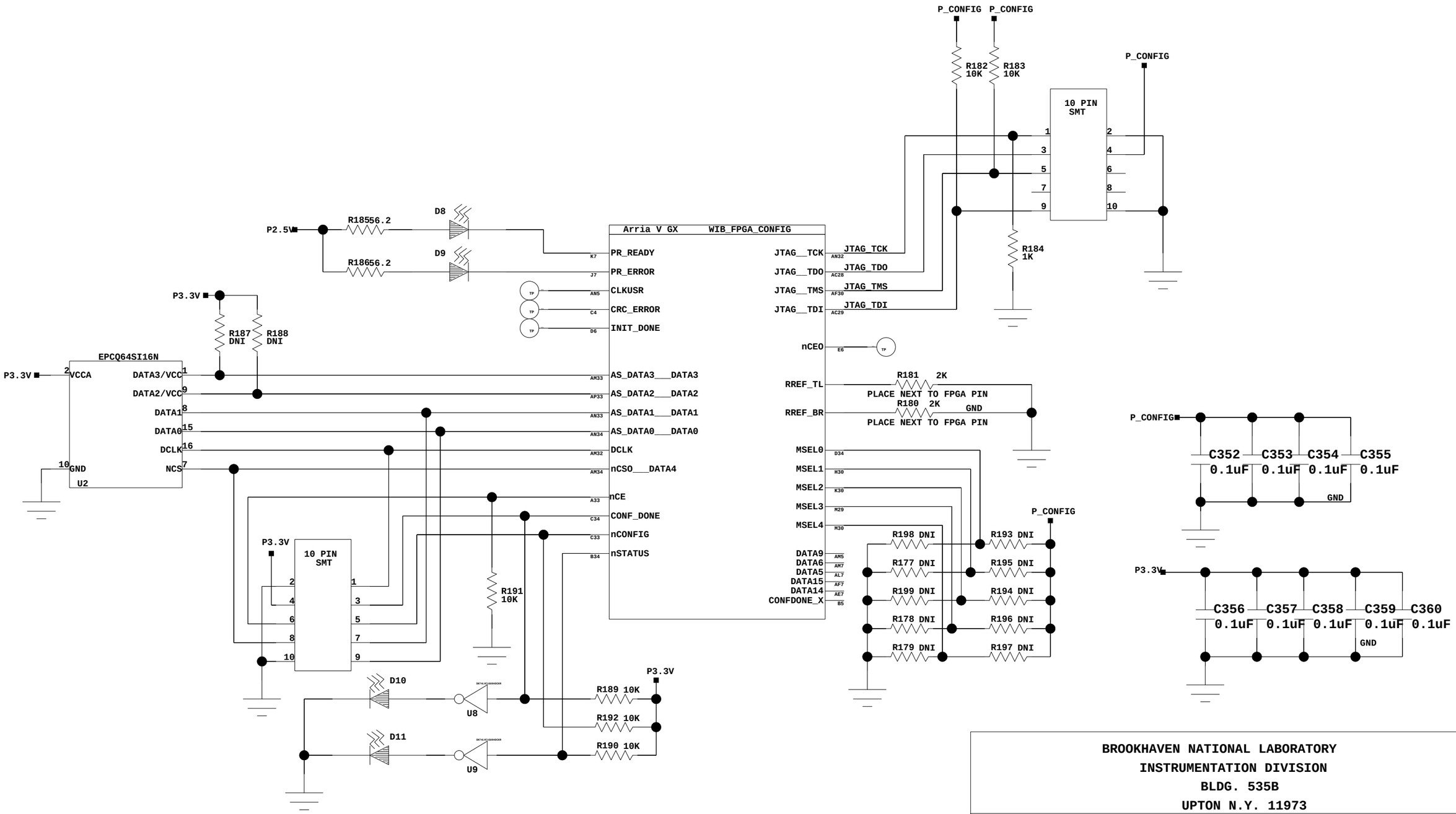

BROOKHAVEN NATIONAL LABORATORY
INSTRUMENTATION DIVISION
BLDG. 535B
UPTON N.Y. 11973

WIB_FPGA_CONFIG

Date: 13/01/2016:10:46

DRAWN BY: Jack Fried

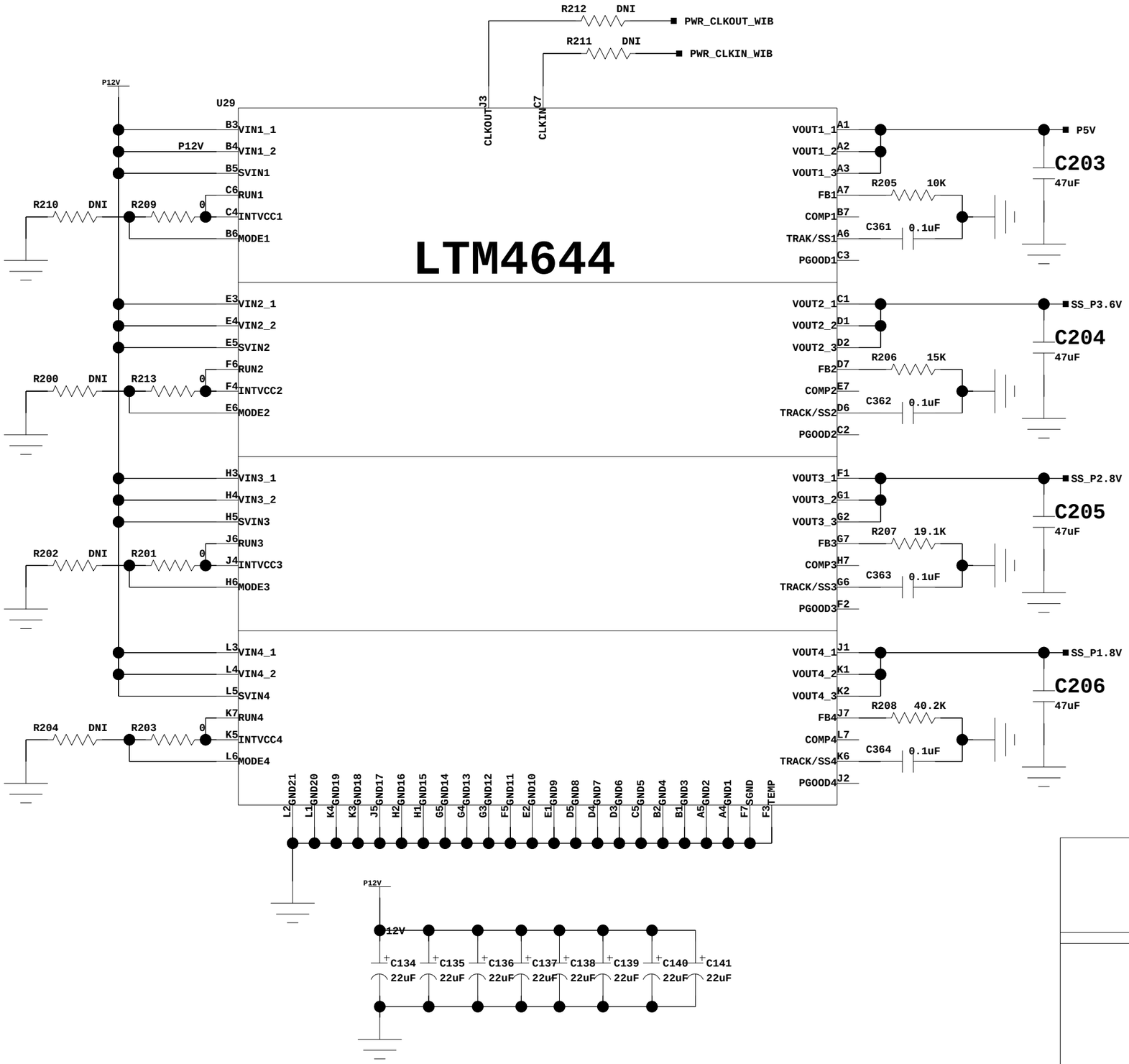

BROOKHAVEN NATIONAL LABORATORY
INSTRUMENTATION DIVISION
BLDG. 535B
UPTON N.Y. 11973

WIB_DC_DC_PWR

Date: 28/12/2015:12:41

DRAWN BY: Jack Fried

1.15V for altera ARRIA GT

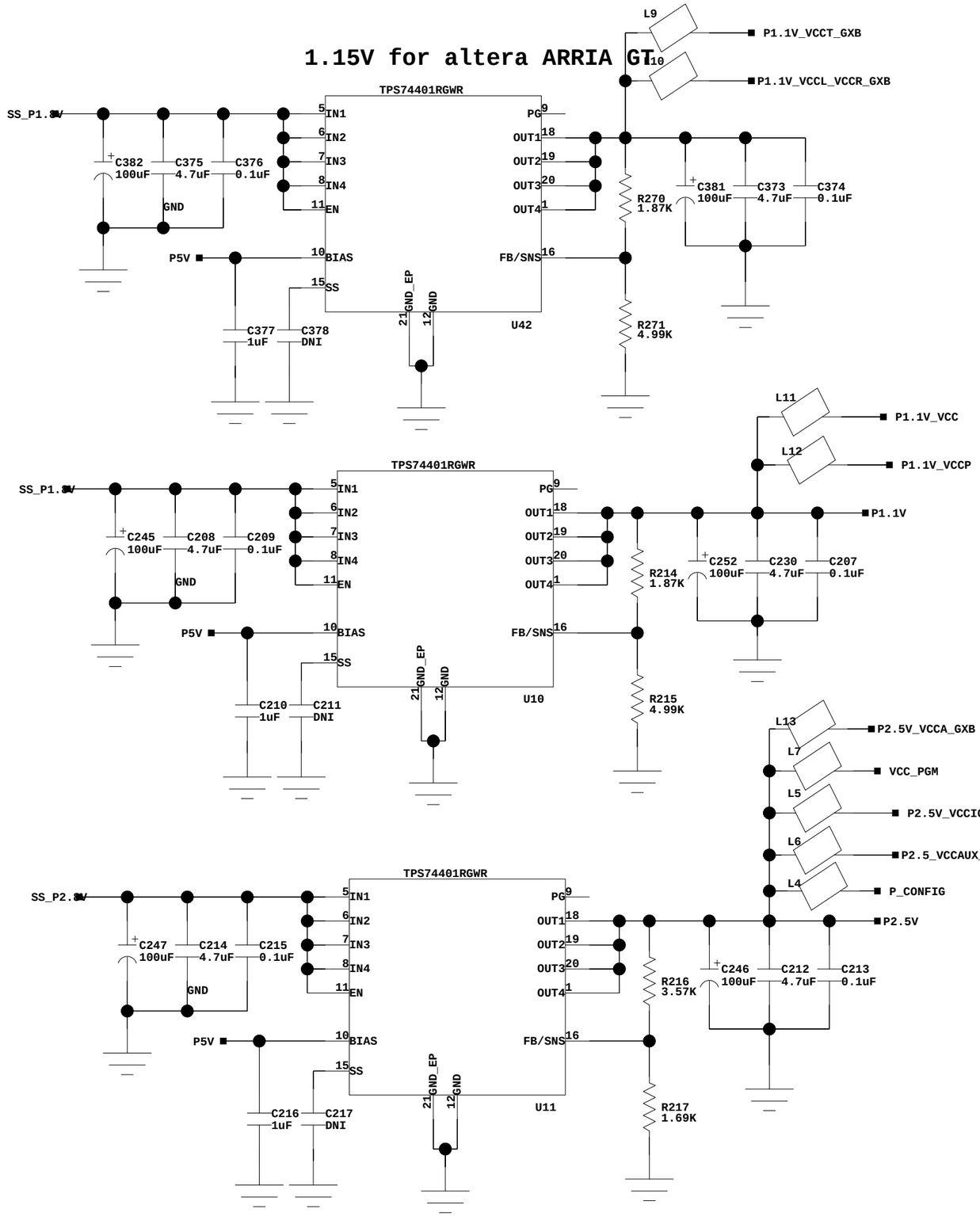

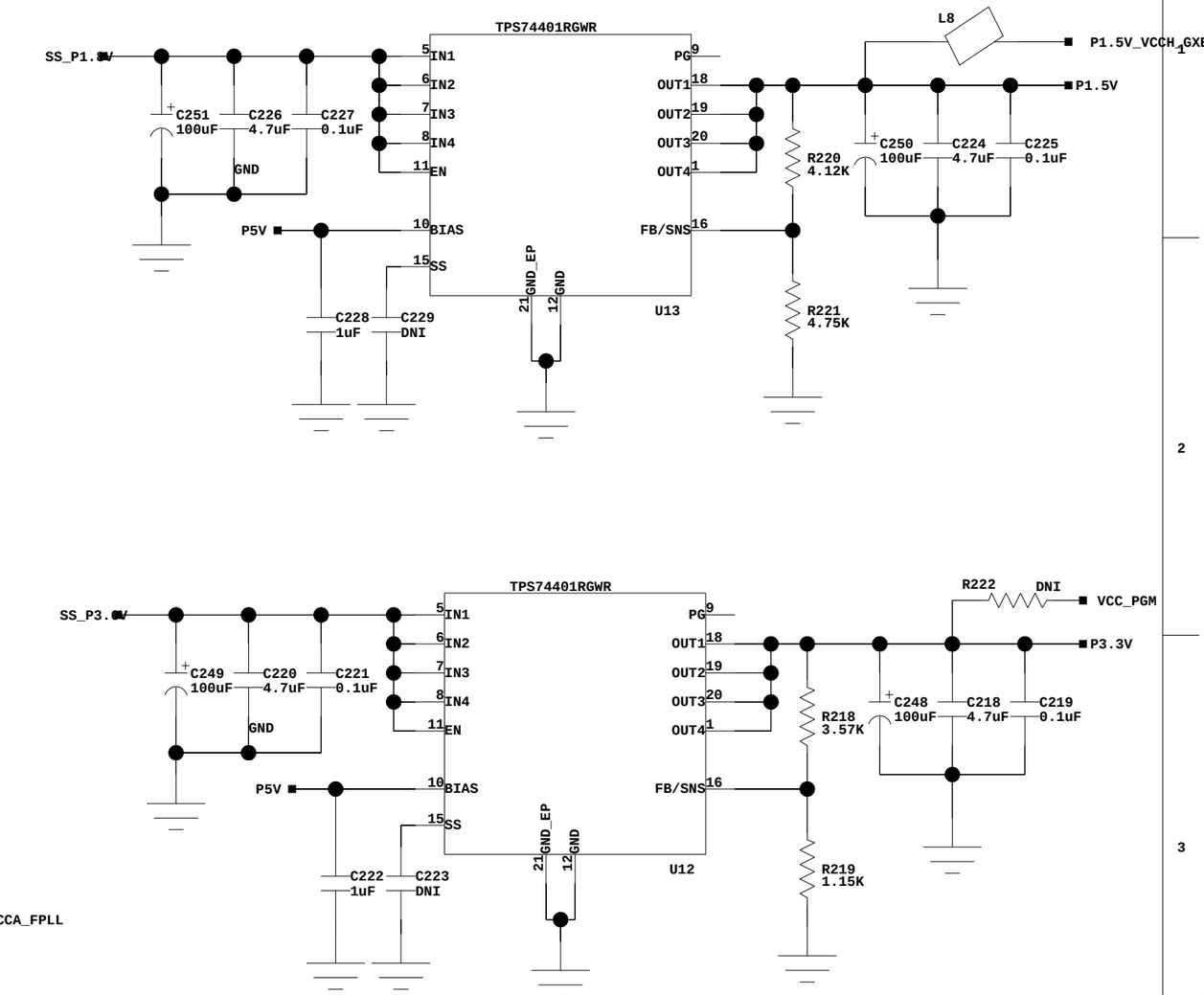

BROOKHAVEN NATIONAL LABORATORY
INSTRUMENTATION DIVISION
BLDG. 535B
UPTON N.Y. 11973

WIB_LINEAR_PWR

Date: 28/02/2016:01:42

DRAWN BY: Jack Fried

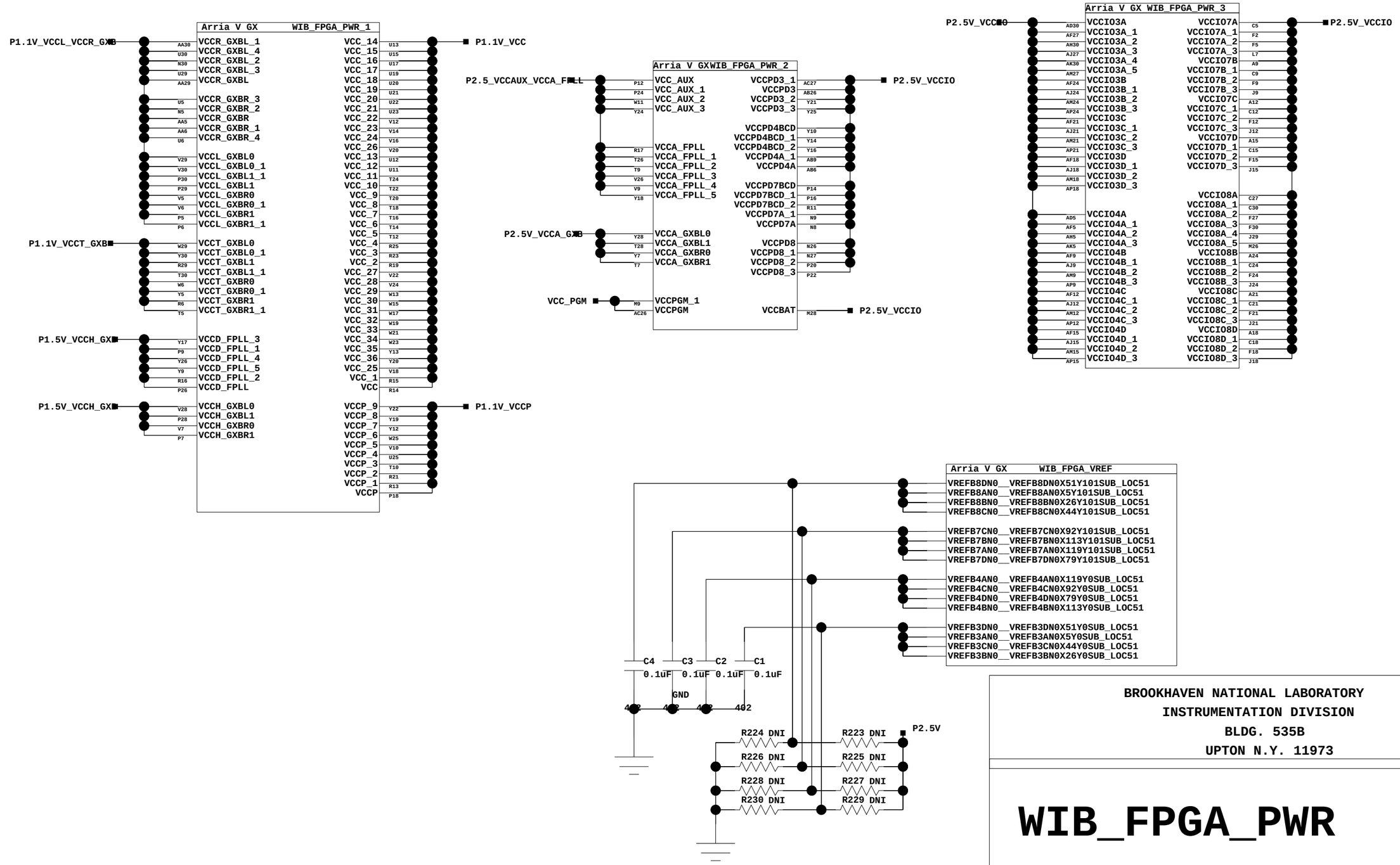

BROOKHAVEN NATIONAL LABORATORY
INSTRUMENTATION DIVISION
BLDG. 535B
UPTON N.Y. 11973

WIB_FPGA_PWR

Date: 13/01/2016:10:46

DRAWN BY: Jack Fried

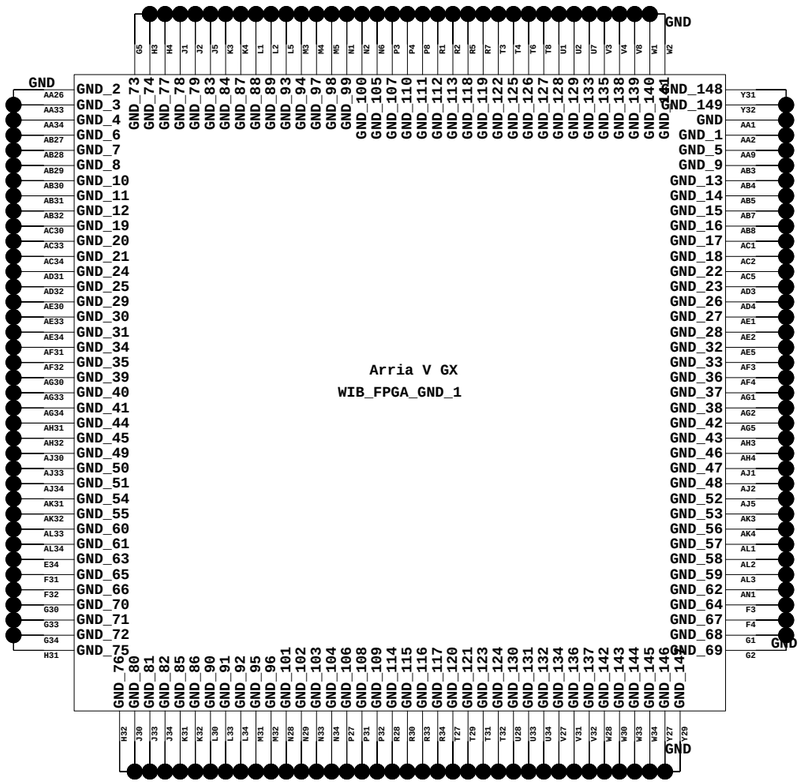

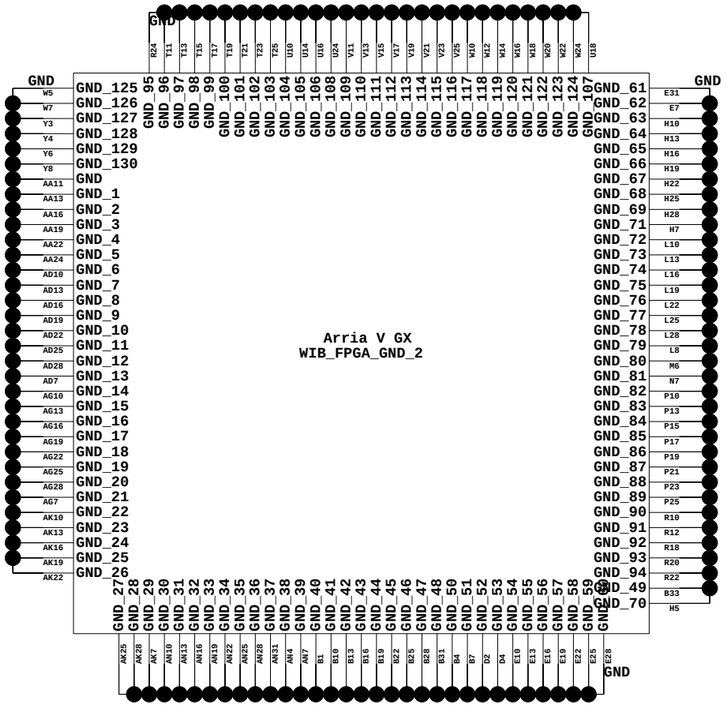

BROOKHAVEN NATIONAL LABORATORY
INSTRUMENTATION DIVISION
BLDG. 535B
UPTON N.Y. 11973

WIB_FPGA_GND

Date: 07/12/2015:15:53

DRAWN BY: Jack Fried

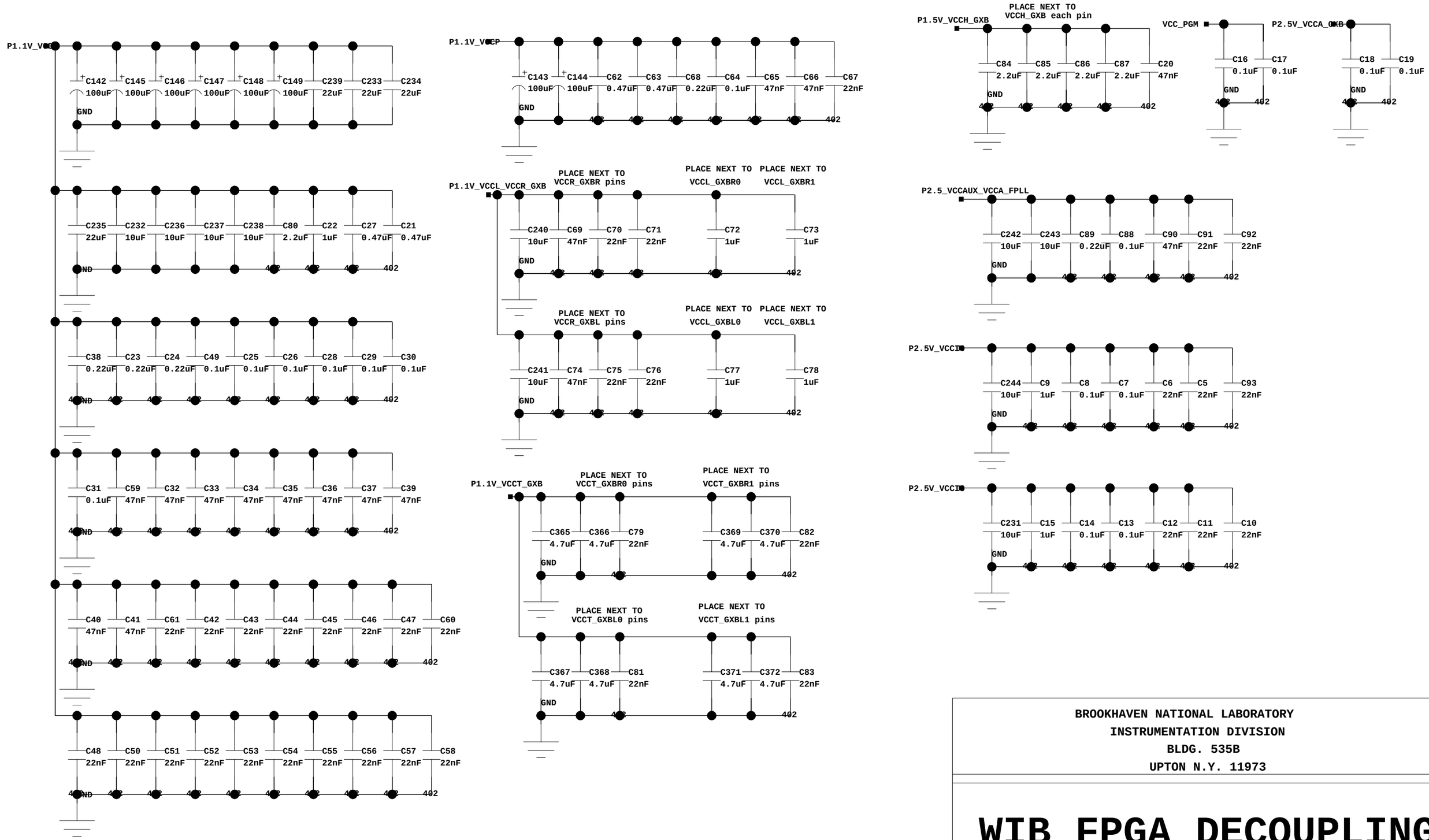

BROOKHAVEN NATIONAL LABORATORY
INSTRUMENTATION DIVISION
BLDG. 535B
UPTON N.Y. 11973

WIB_FPGA_DECOUPLING

Date: 13/01/2016:10:46

DRAWN BY: Jack Fried

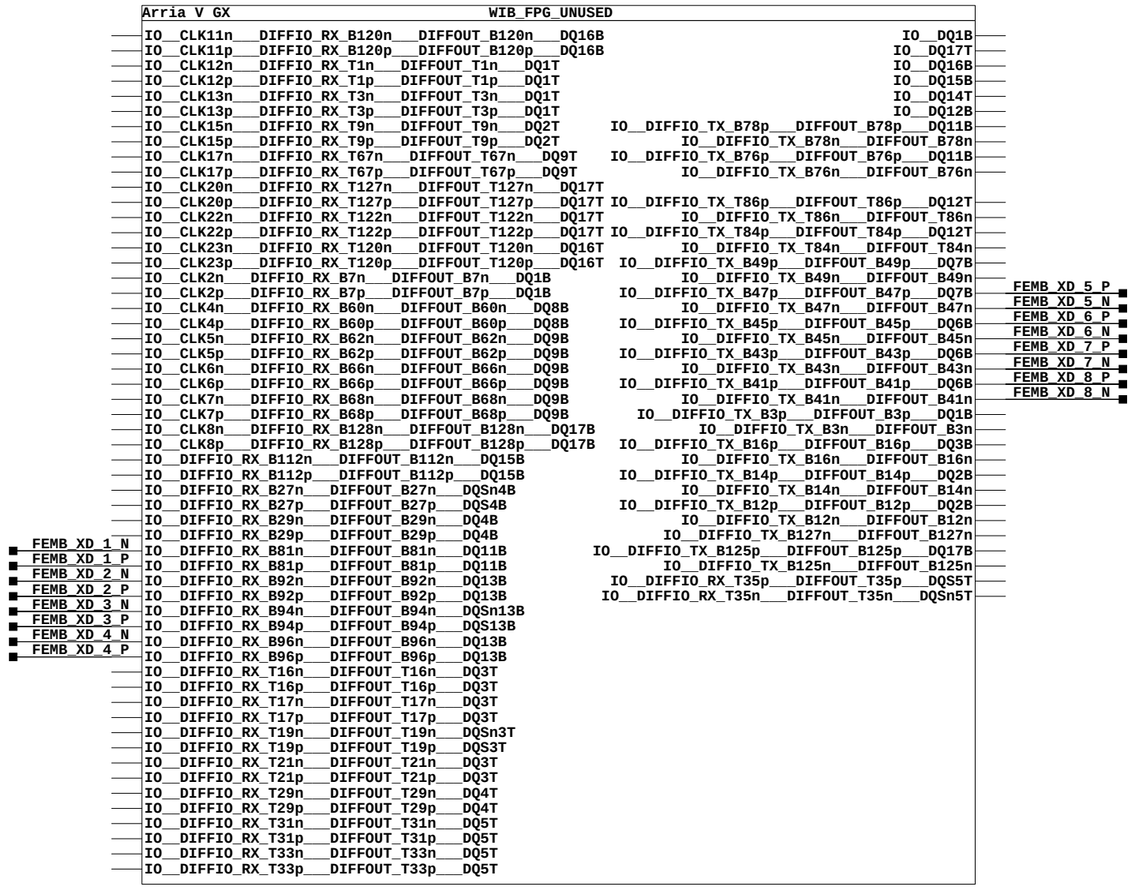

BROOKHAVEN NATIONAL LABORATORY
INSTRUMENTATION DIVISION
BLDG. 535B
UPTON N.Y. 11973

WIB_FPGA_EXTRA_IO

Date: 28/02/2016:01:26

DRAWN BY: Jack Fried