SBND WIB V2

Top View - Flip Chip

Arria V - 5AGXFA5H6F35C6

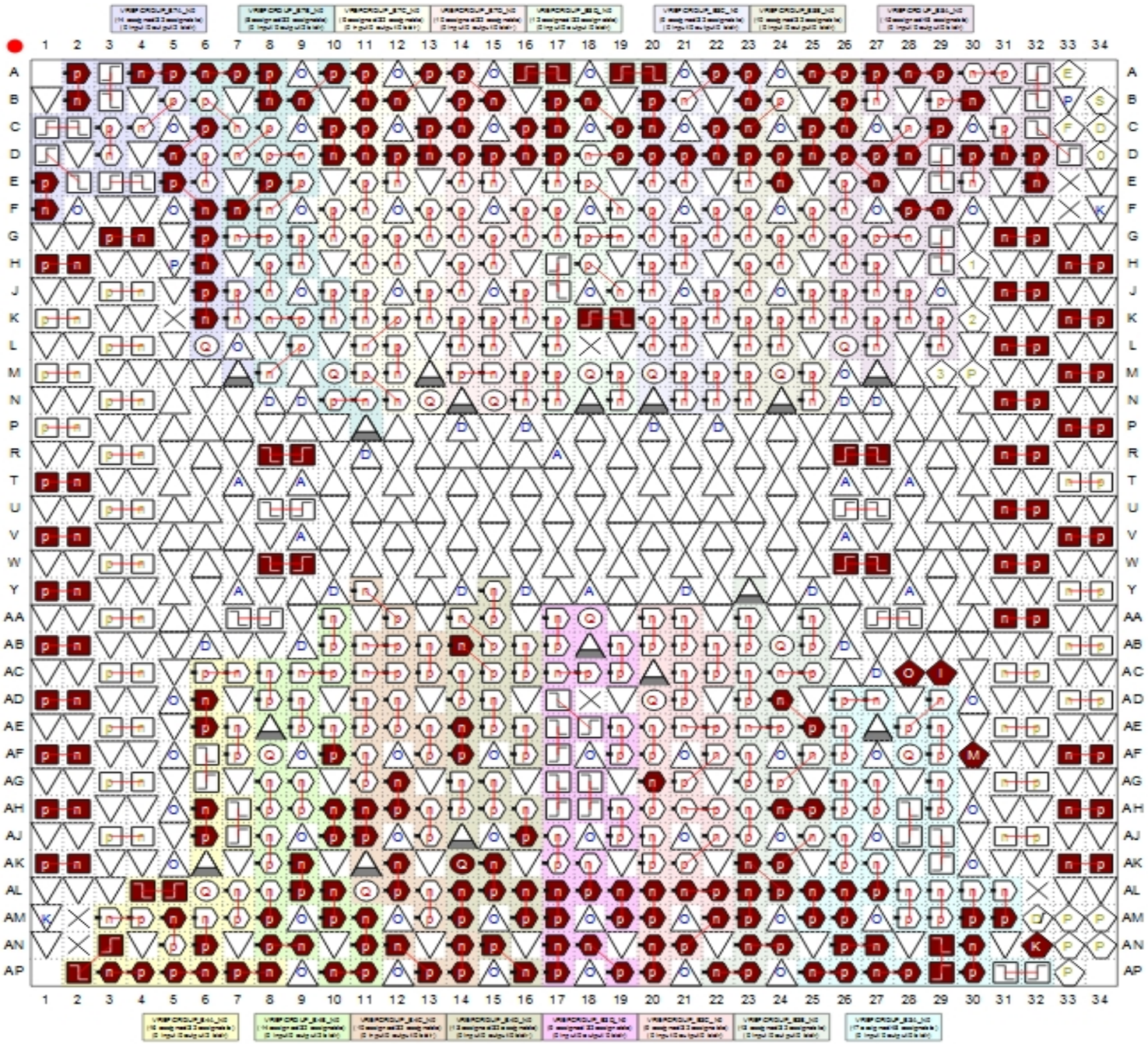

PAGE	DESCRIPTION
1	TITLE
2	WIB_FLANGE_IO
3	WIB_RX_EQ_BRD0
4	WIB_RX_EQ_BRD1
5	WIB_RX_EQ_BRD2
6	WIB_RX_EQ_BRD3
7	WIB_PWR_BACK_PLANE
8	WIB FEMB CLOCK FANOUT
9	WIB FEMB CMD FANOUT
10	WIB_CLK_GEN
11	WIB_EXT_PLL
12	WIB_ETHERNET_SFP
13	WIB_P_POD
14	WIB_FEMB_PWR_CNTL
15	WIB_BRD0_PWR
16	WIB_BRD1_PWR
17	WIB_BRD2_PWR
18	WIB_BRD3_PWR
19	WIB_BIAS_BRD0-3
20	WIB EXT CALB INPUT
21	WIB INT CAL DAC
22	WIB_CAL_DRIVERS
23	WIB_MISC_IO
24	WIB_FPGA_CONFIG
25	WIB_DC_DC_PWR
26	WIB_LINEAR_PWR_1
27	WIB_LINEAR_PWR_2
28	WIB_FPGA_PWR
29	WIB_FPGA_GND
30	WIB_FPGA_DECOUPLING
31	WIB_FPGA_EXTRA_IO

BROOKHAVEN NATIONAL LABORATORY

INSTRUMENTATION DIVISION

TITLE

TITLE

SIZE B | BOARD : SBND_WIB_V2

DRAWN : Jack Fried | DATE : 30/11/2016:21:22

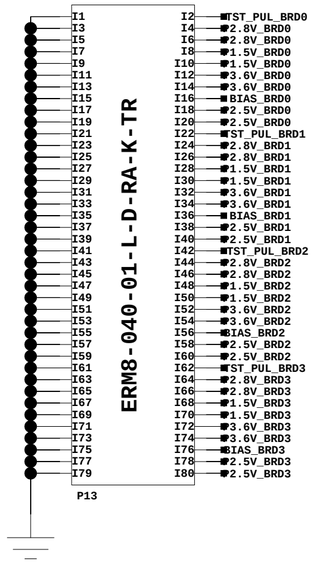

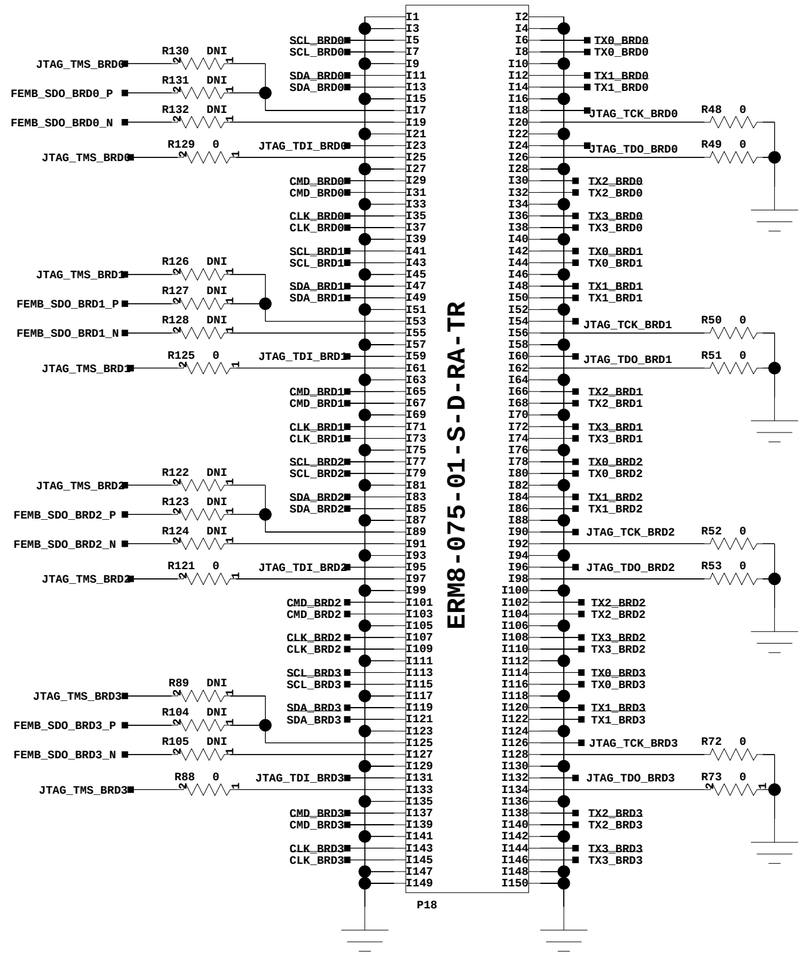

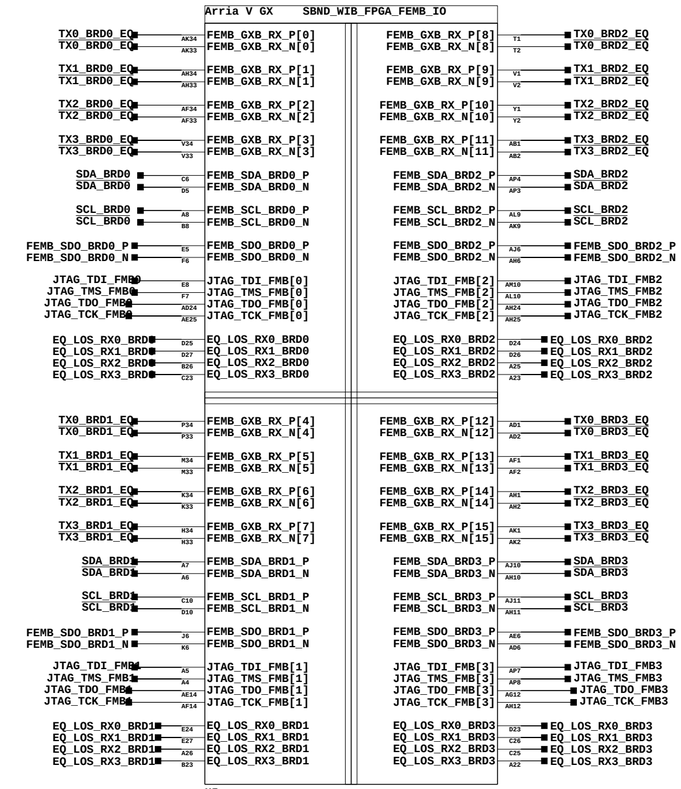

FRONT PANNEL

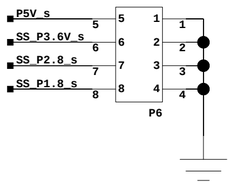

NEXT TO FPGA

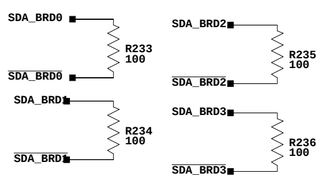

Ask about placment

FRONT PANNEL

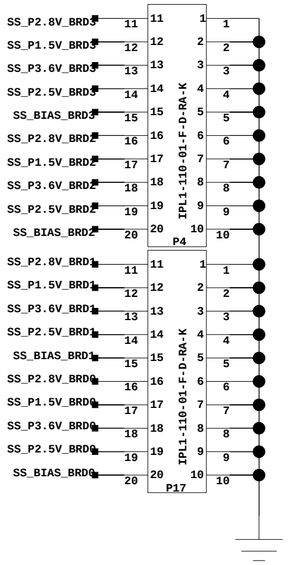

FRONT PANNEL

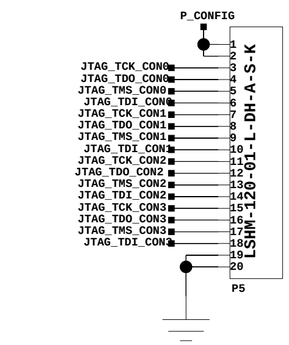

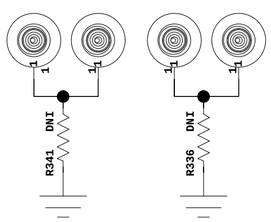

PAIRS

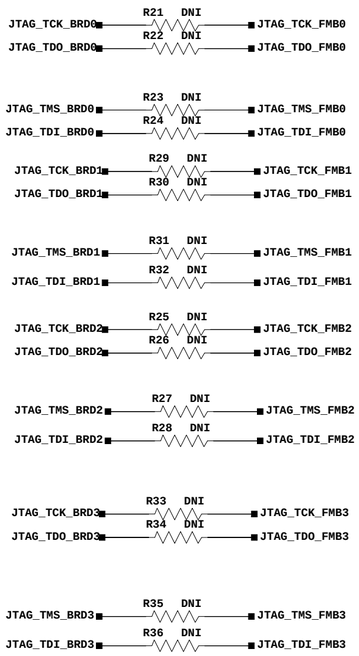

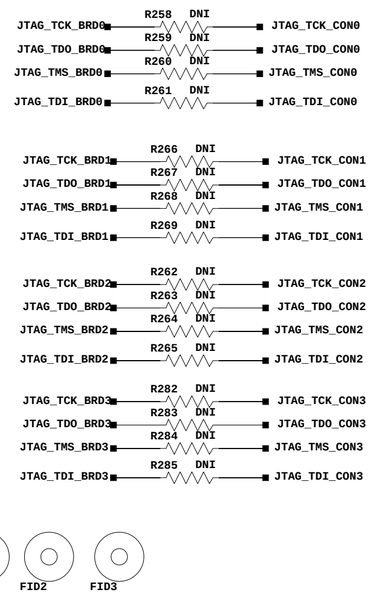

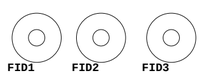

BROOKHAVEN NATIONAL LABORATORY
INSTRUMENTATION DIVISION

SBND_WIB_V2

WIB_FLANGE_IO

Date: 19/10/2016:17:29

DRAWN BY: Jack Fried

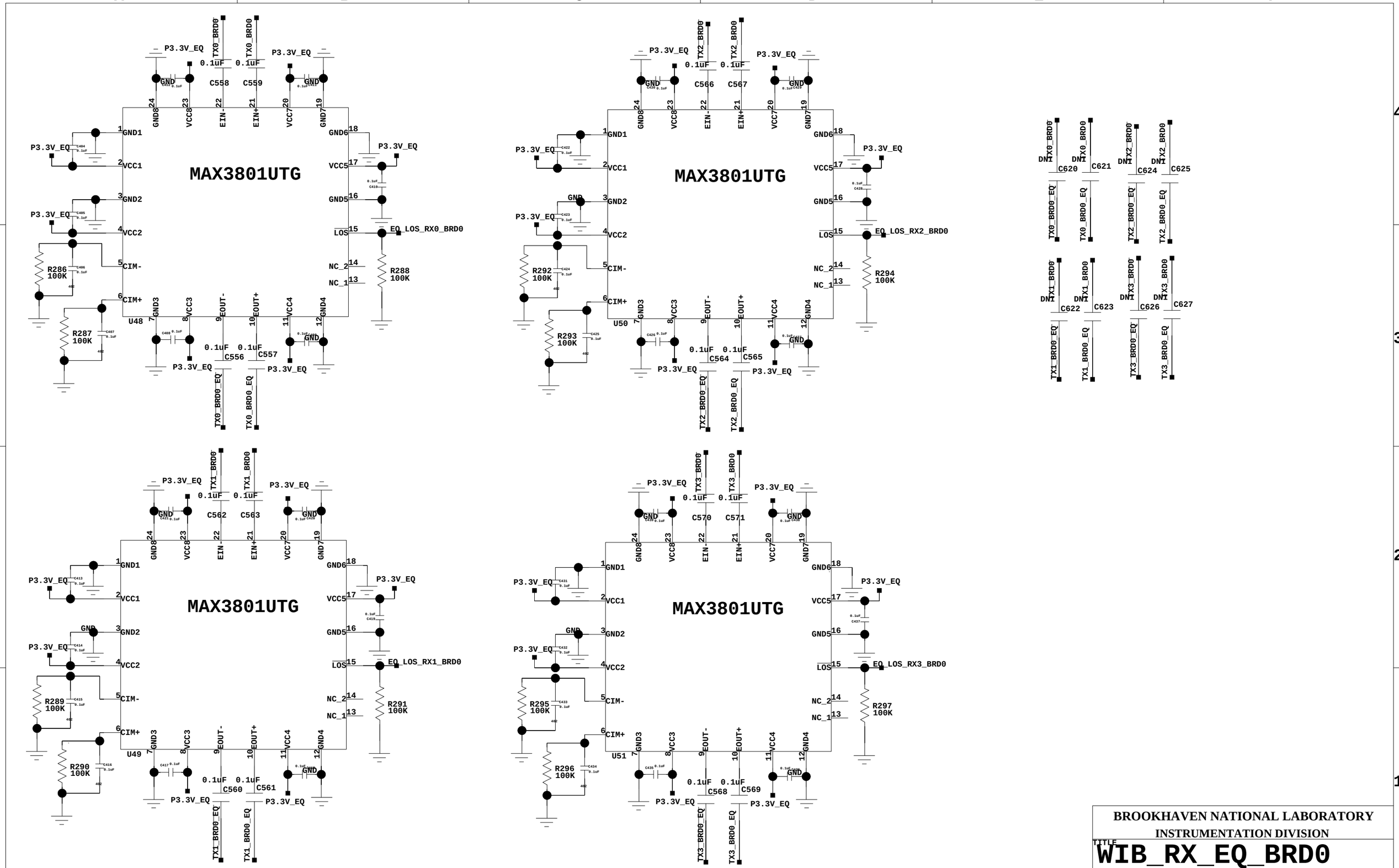

BROOKHAVEN NATIONAL LABORATORY
INSTRUMENTATION DIVISION

TITLE
WIB_RX_EQ_BRD0

SIZE B	BOARD : SBND_WIB_V2
DRAWN : Jack Fried	DATE : 19/10/2016:17:29

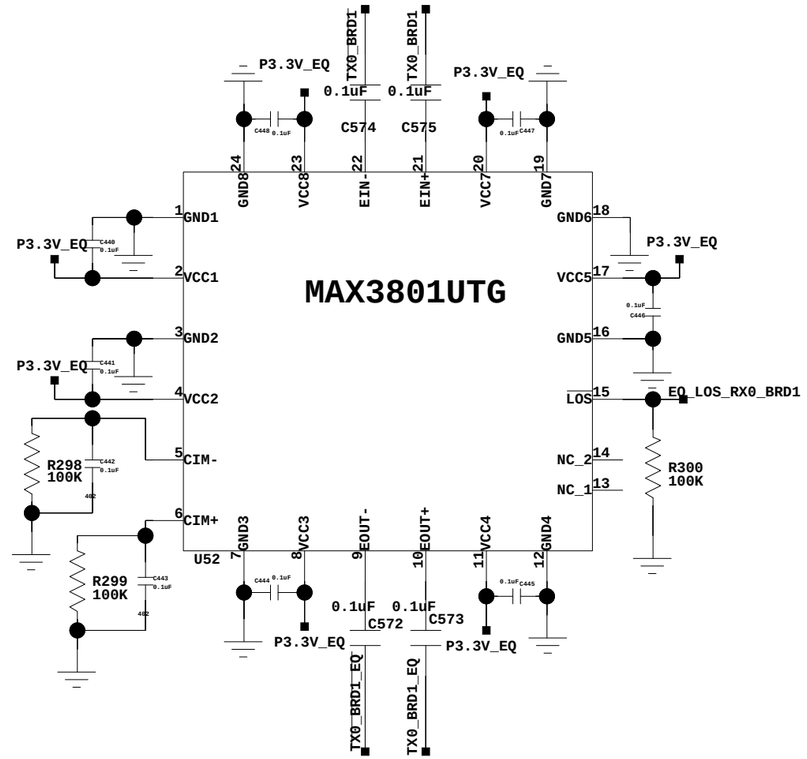

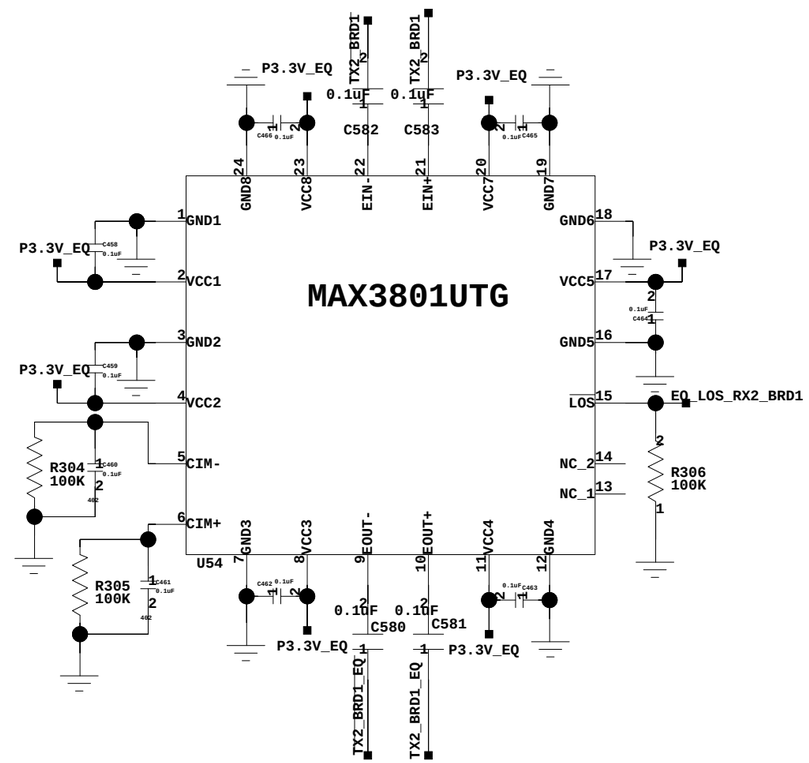

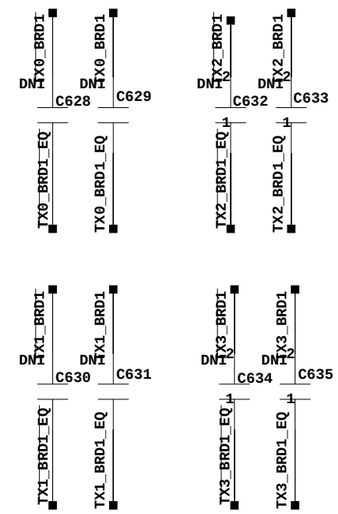

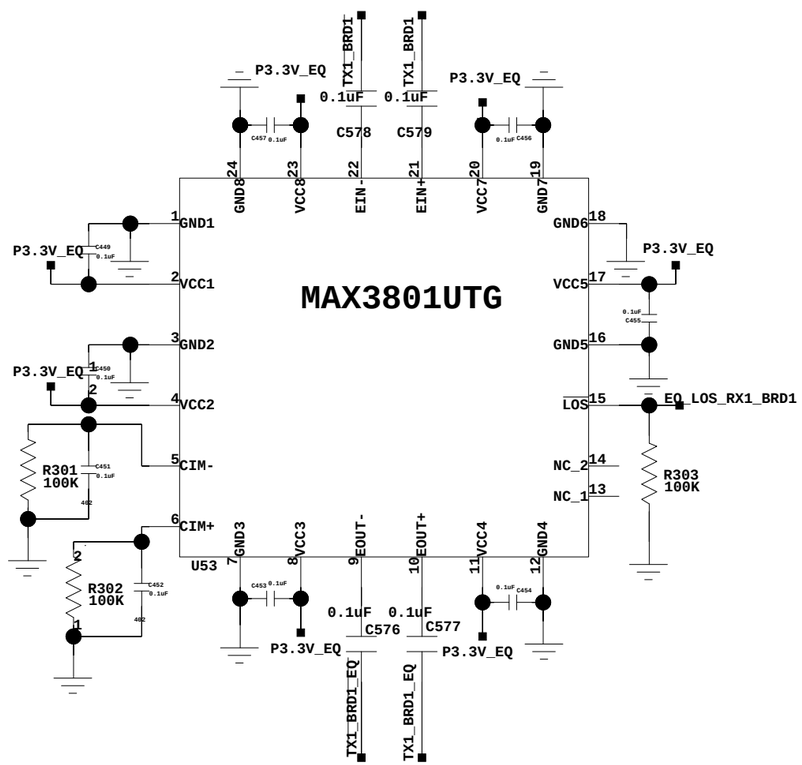

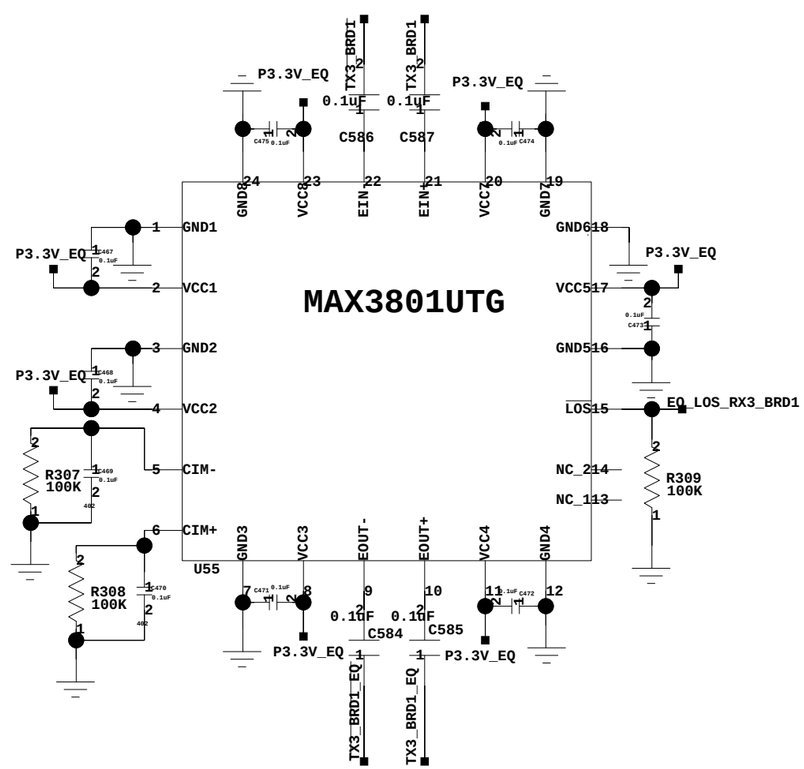

BROOKHAVEN NATIONAL LABORATORY
INSTRUMENTATION DIVISION

TITLE
WIB_RX_EQ_BRD1

SIZE B	BOARD : SBND_WIB_V2
DRAWN : Jack Fried	DATE : 19/10/2016:17:19

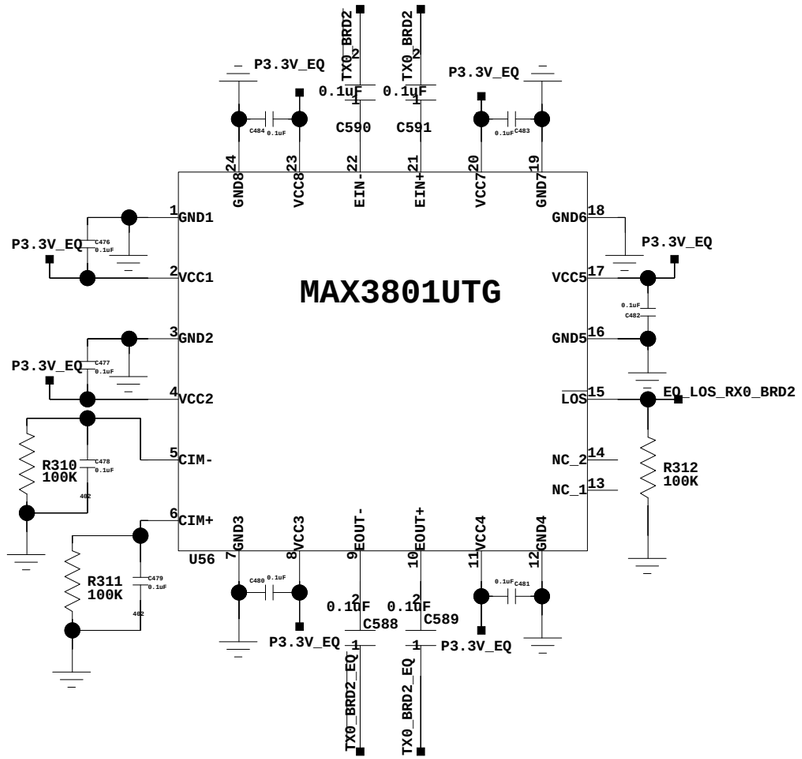

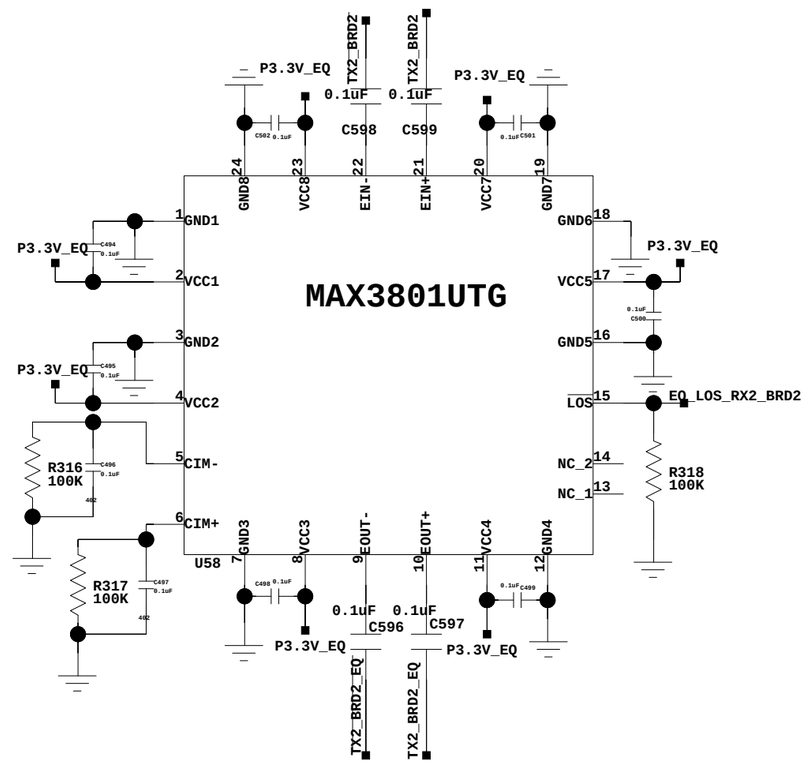

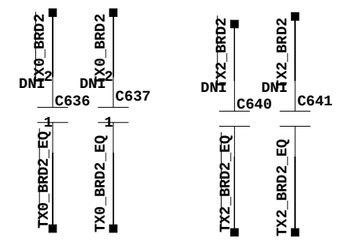

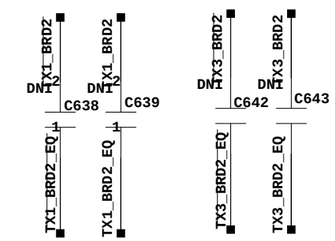

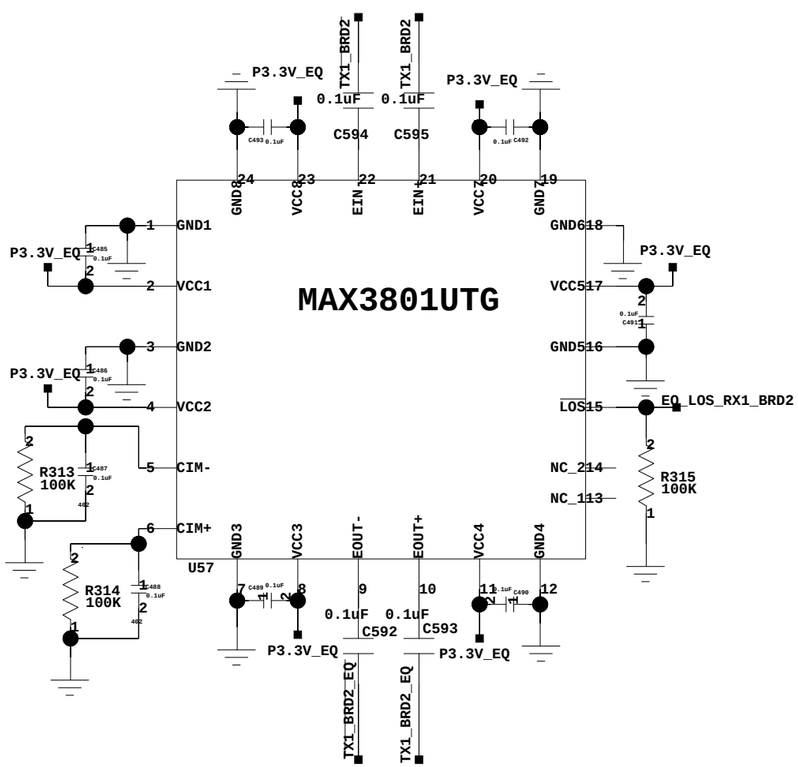

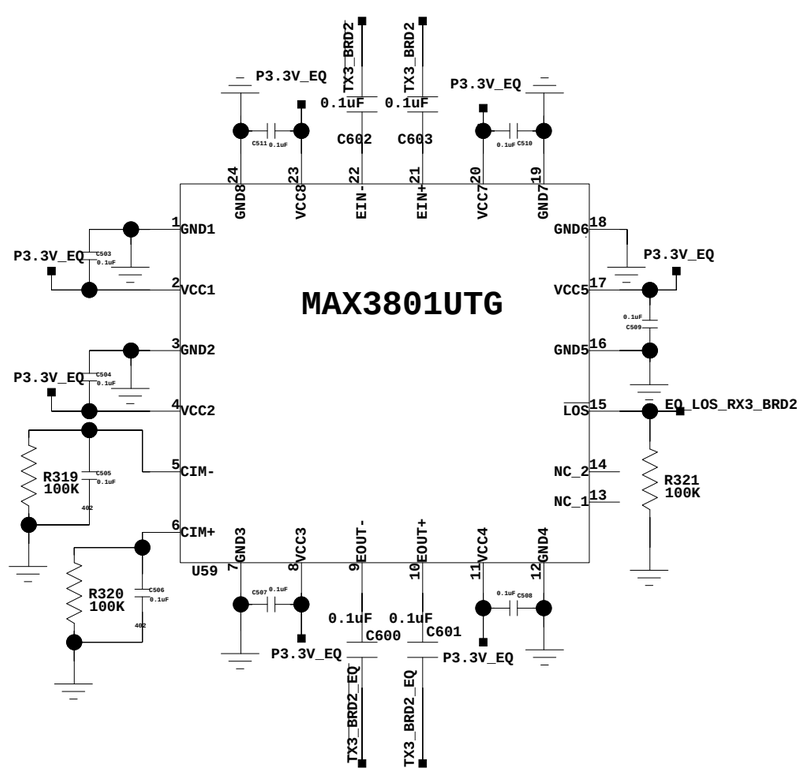

BROOKHAVEN NATIONAL LABORATORY
INSTRUMENTATION DIVISION

TITLE
WIB_RX_EQ_BRD2

SIZE B	BOARD : SBND_WIB_V2
DRAWN : Jack Fried	DATE : 19/10/2016:17:19

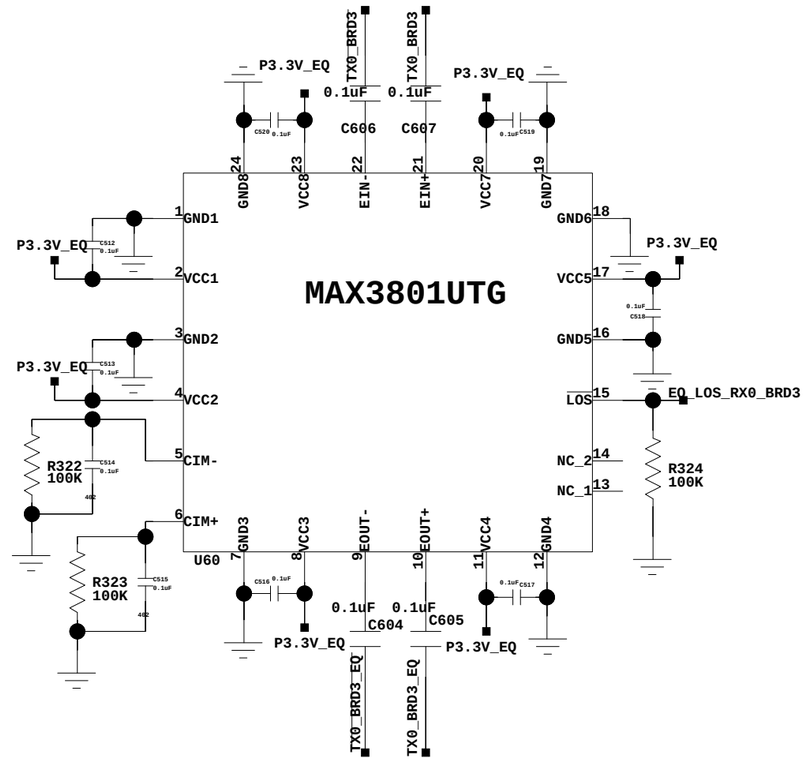

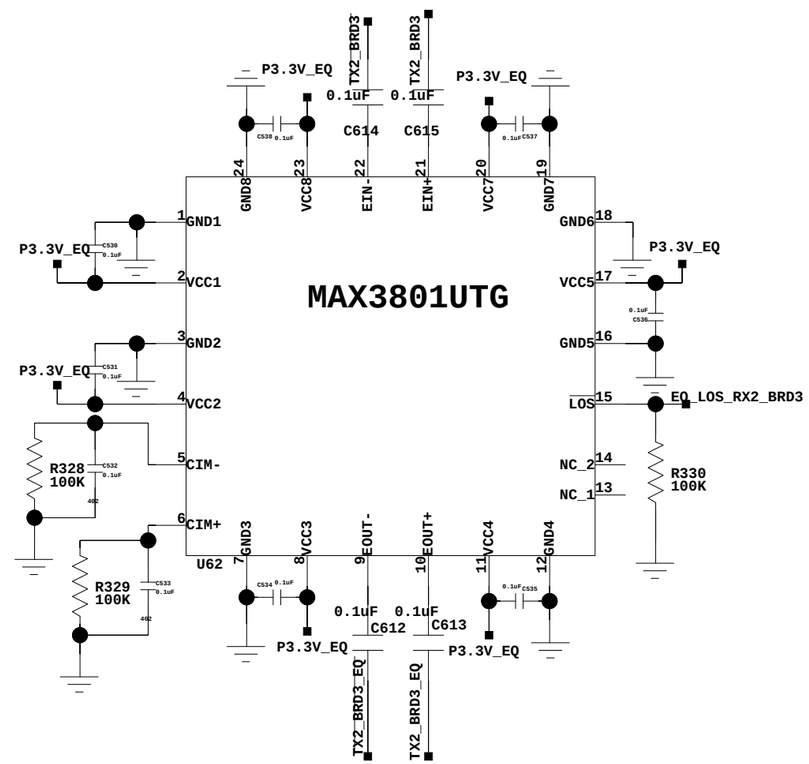

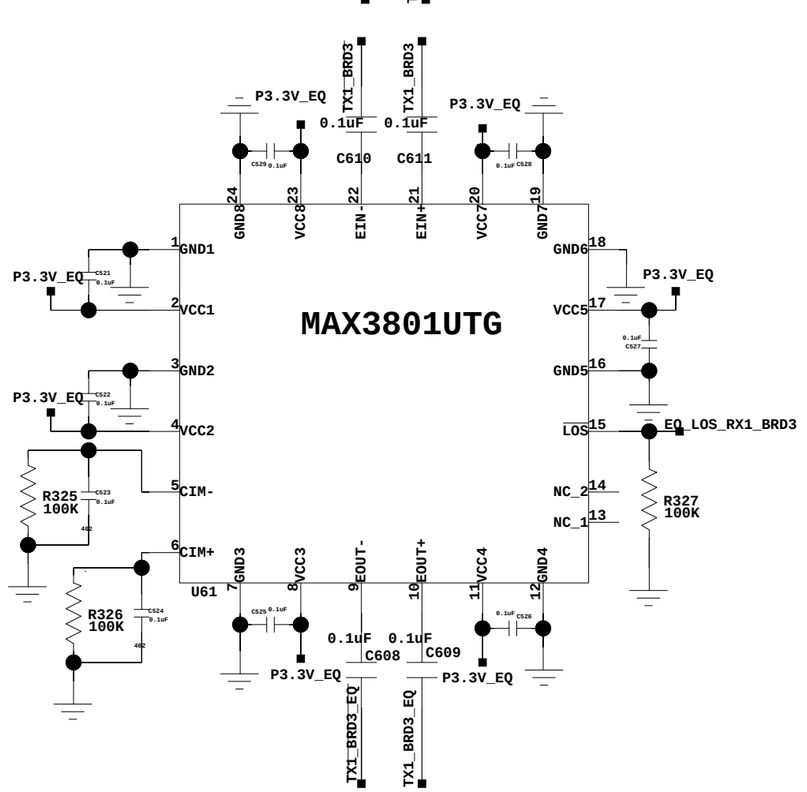

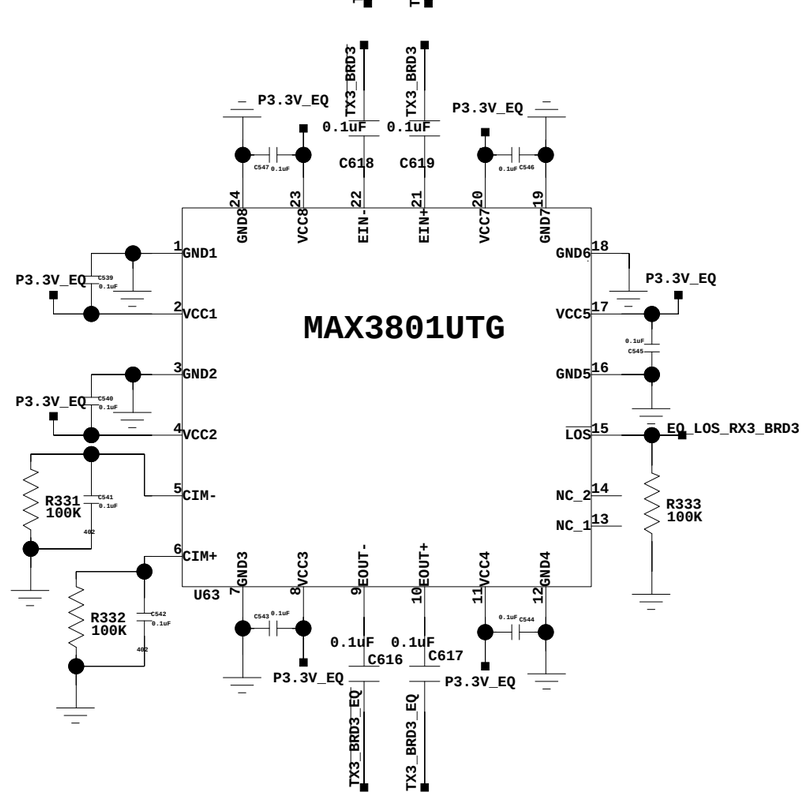

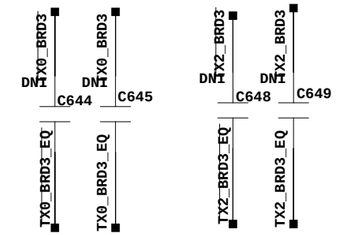

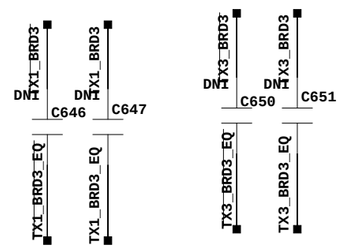

BROOKHAVEN NATIONAL LABORATORY
INSTRUMENTATION DIVISION

TITLE
WIB_RX_EQ_BRD3

SIZE B		BOARD :	SBND_WIB_V2
DRAWN :	Jack Fried	DATE :	14/10/2016:13:01

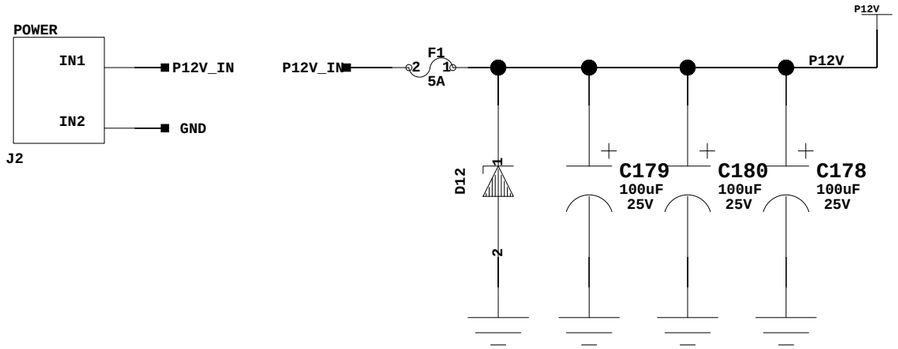

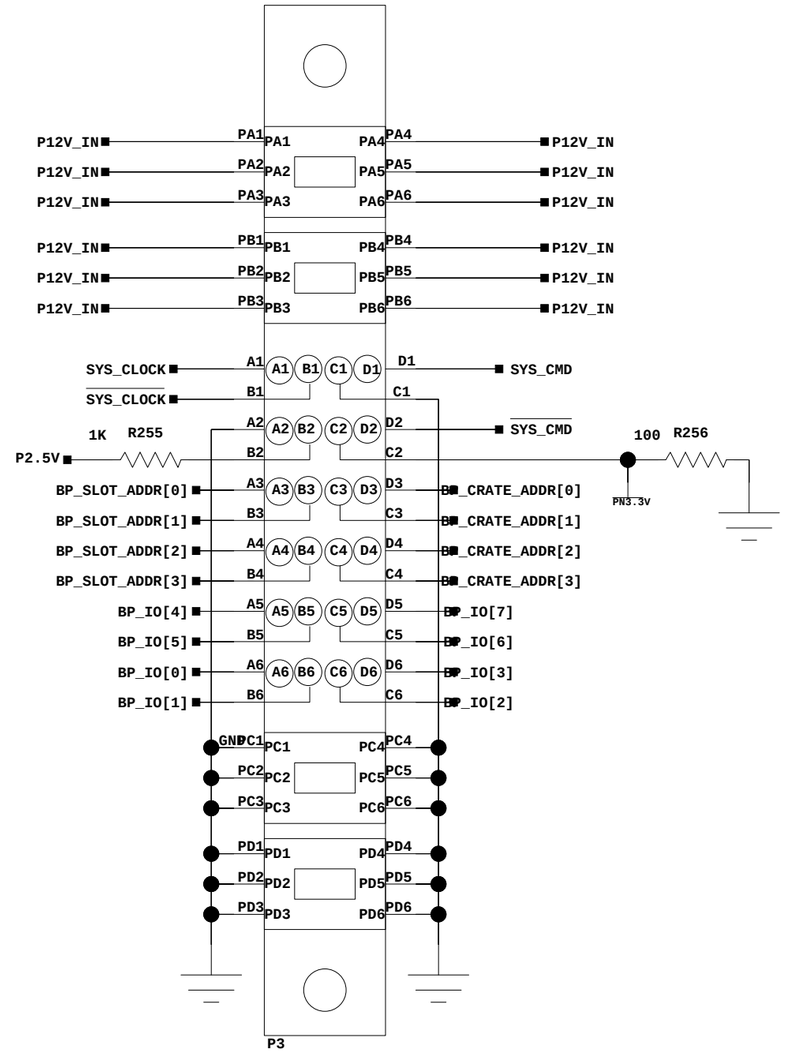

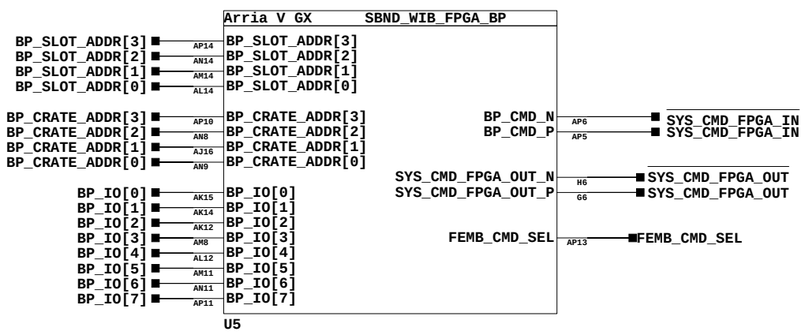

NEXT TO FPGA

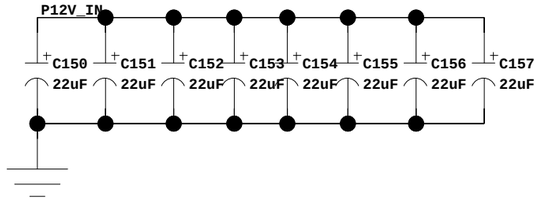

BROOKHAVEN NATIONAL LABORATORY
INSTRUMENTATION DIVISION

TITLE
WIB_PWR_BACK_PLANE

SIZE B	BOARD : SBND_WIB_V2
DRAWN : Jack Fried	DATE : 20/10/2016:15:01

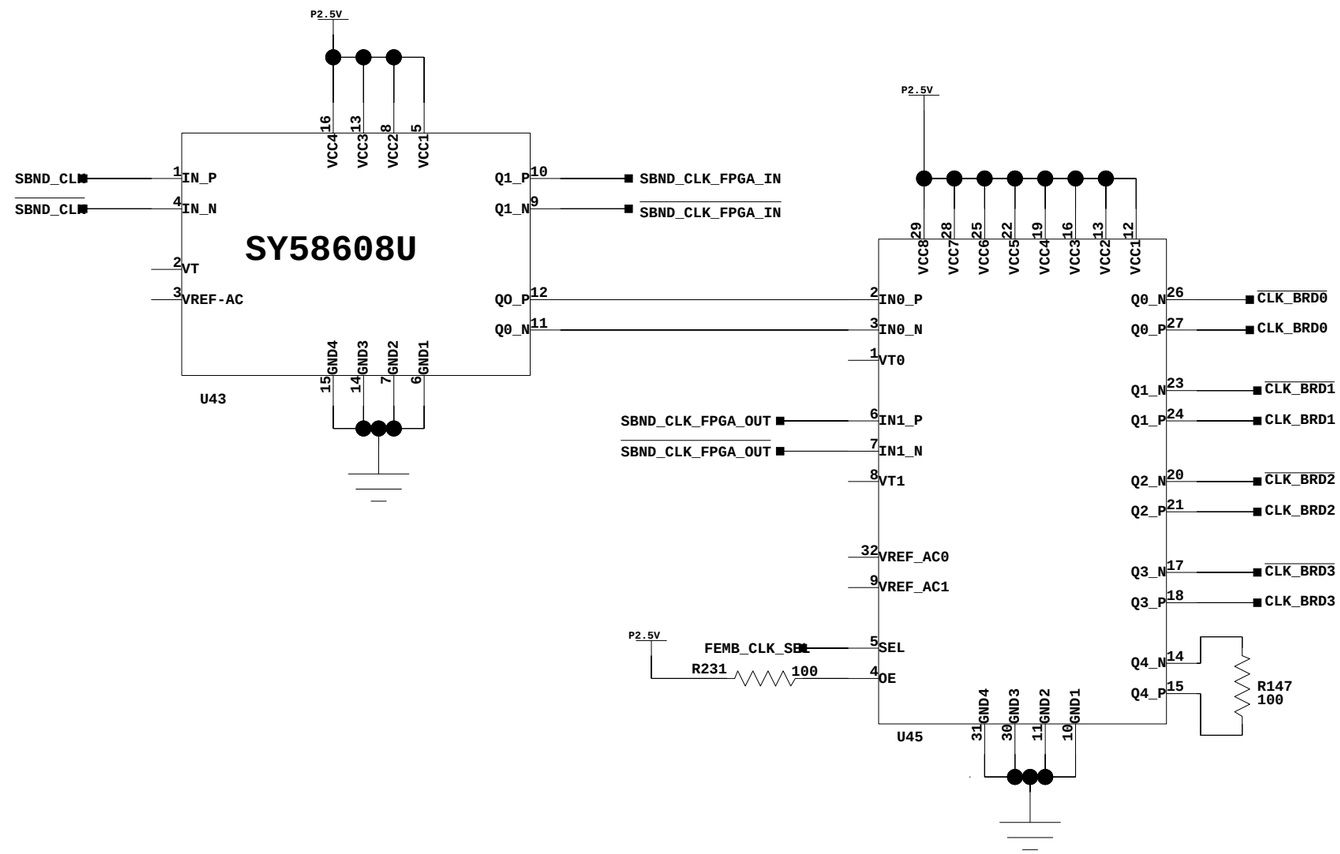

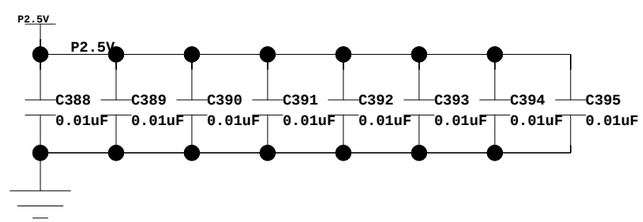

BROOKHAVEN NATIONAL LABORATORY
INSTRUMENTATION DIVISION

TITLE
WIB FEMB CLOCK FANOUT

SIZE B	BOARD : SBND_WIB_V2
DRAWN : Jack Fried	DATE : 14/10/2016:13:01

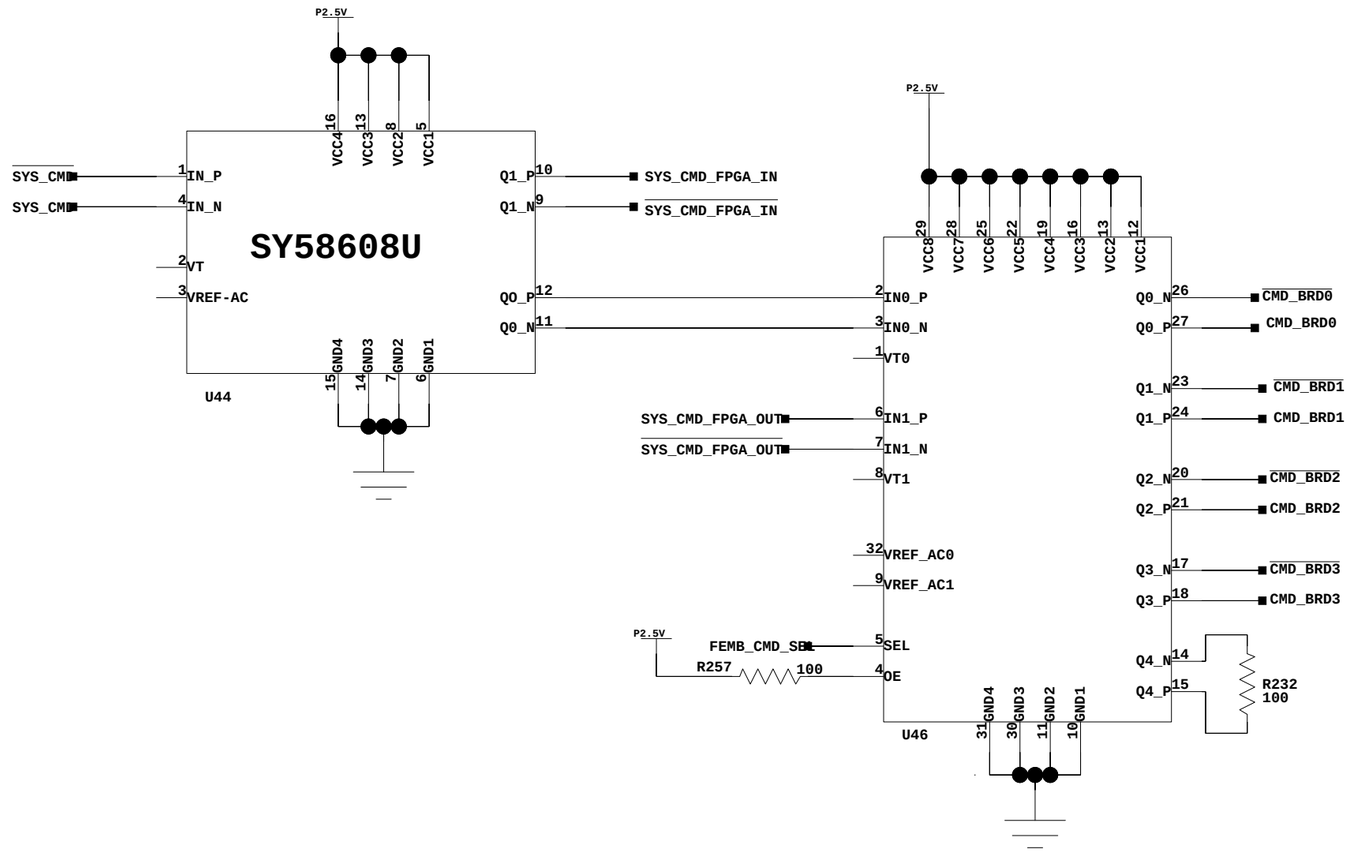

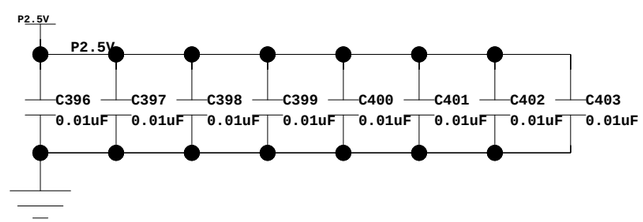

BROOKHAVEN NATIONAL LABORATORY
INSTRUMENTATION DIVISION

TITLE
WIB FEMB CMD FANOUT

SIZE B	BOARD : SBND_WIB_V2
DRAWN : Jack Fried	DATE : 14/10/2016:13:02

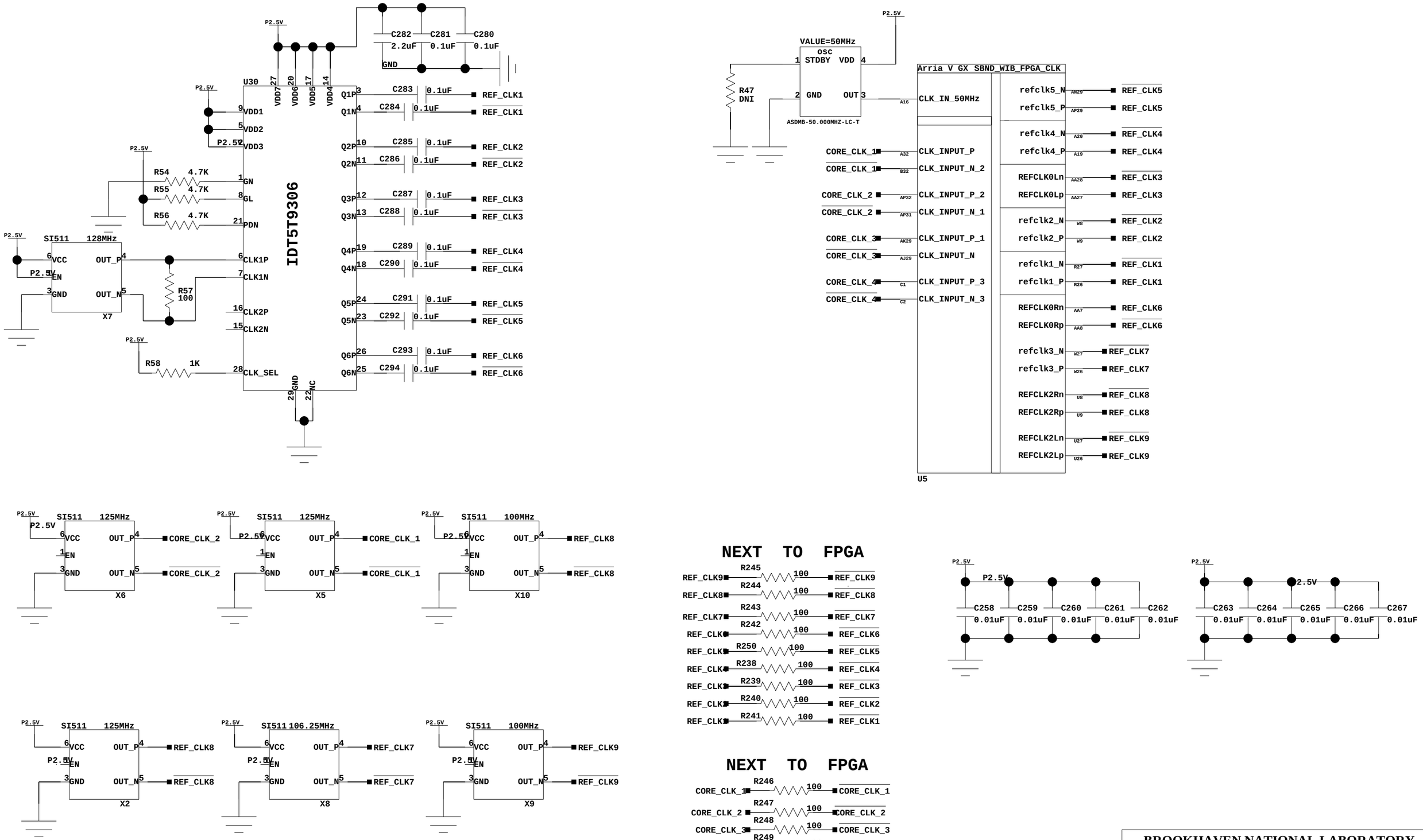

BROOKHAVEN NATIONAL LABORATORY
INSTRUMENTATION DIVISION

TITLE
WIB_CLK_GEN

SIZE B	BOARD : SBND_WIB_V2
DRAWN : Jack Fried	DATE : 19/10/2016:17:29

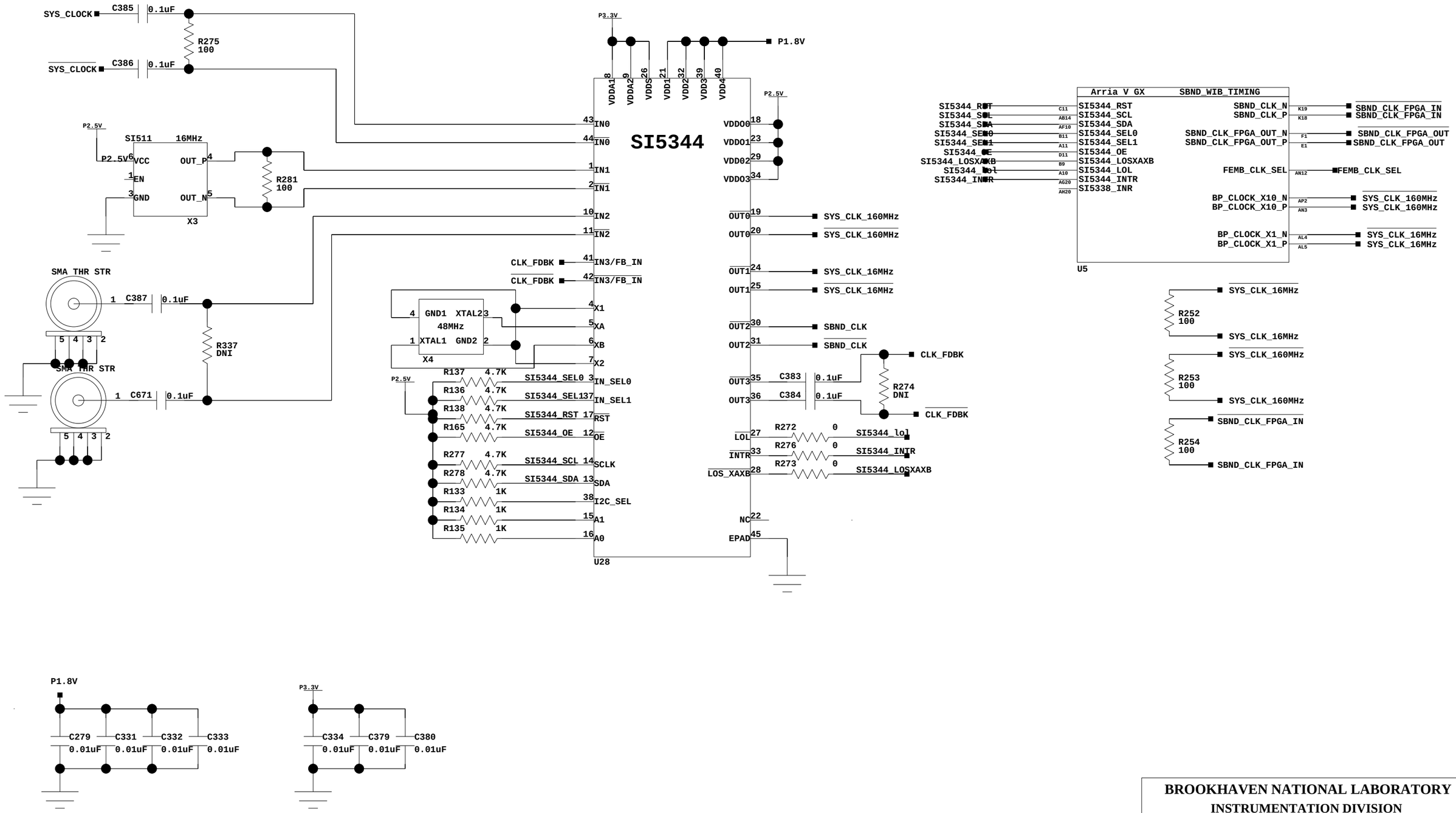

BROOKHAVEN NATIONAL LABORATORY
INSTRUMENTATION DIVISION

TITLE **WIB_EXT_PLL**

SIZE B	BOARD : SBND_WIB_V2
DRAWN : Jack Fried	DATE : 20/10/2016:00:10

FRONT PANNEL

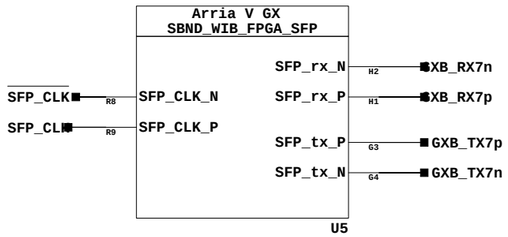

NEXT TO FPGA

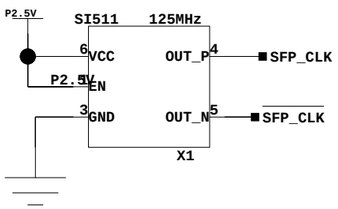

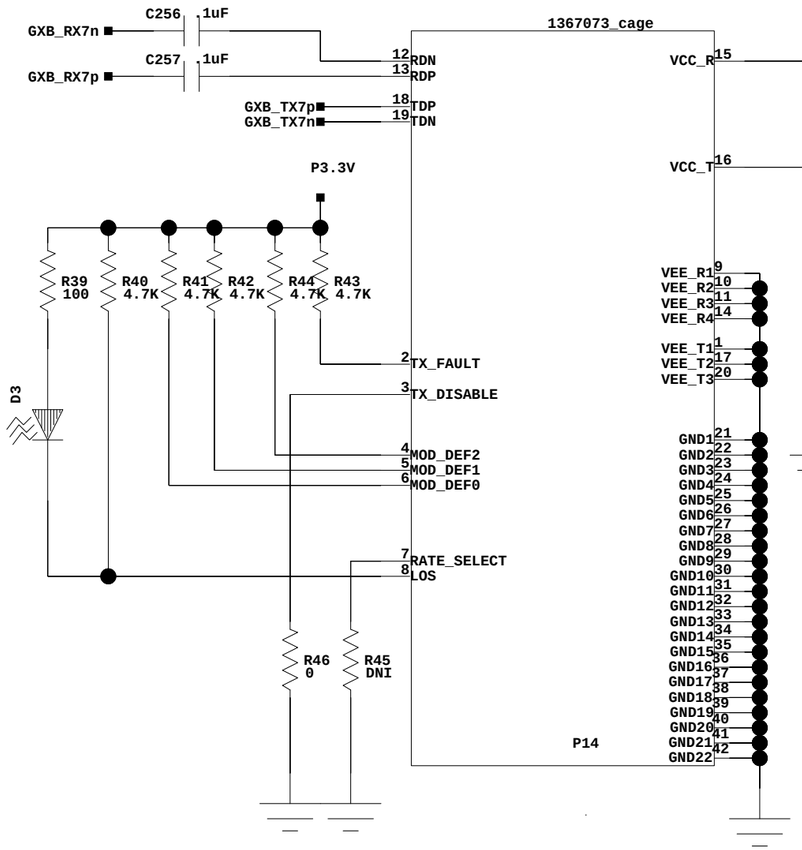

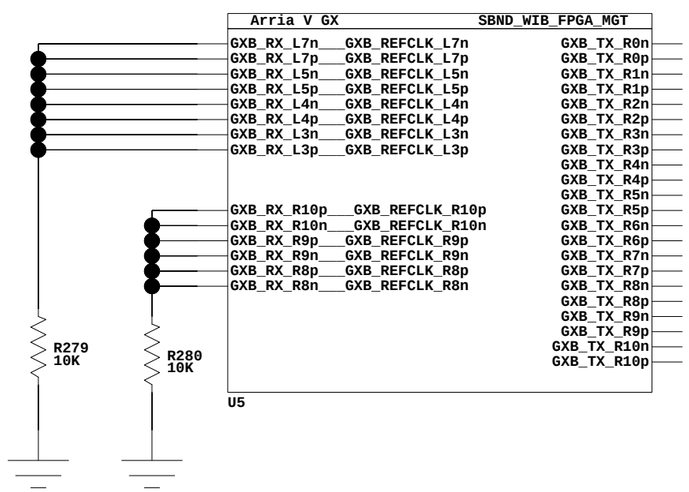

BROOKHAVEN NATIONAL LABORATORY
INSTRUMENTATION DIVISION

TITLE
WIB_ETHERNET_SFP

SIZE B	BOARD : SBND_WIB_V2
DRAWN : Jack Fried	DATE : 19/10/2016:17:29

FRONT PANNEL

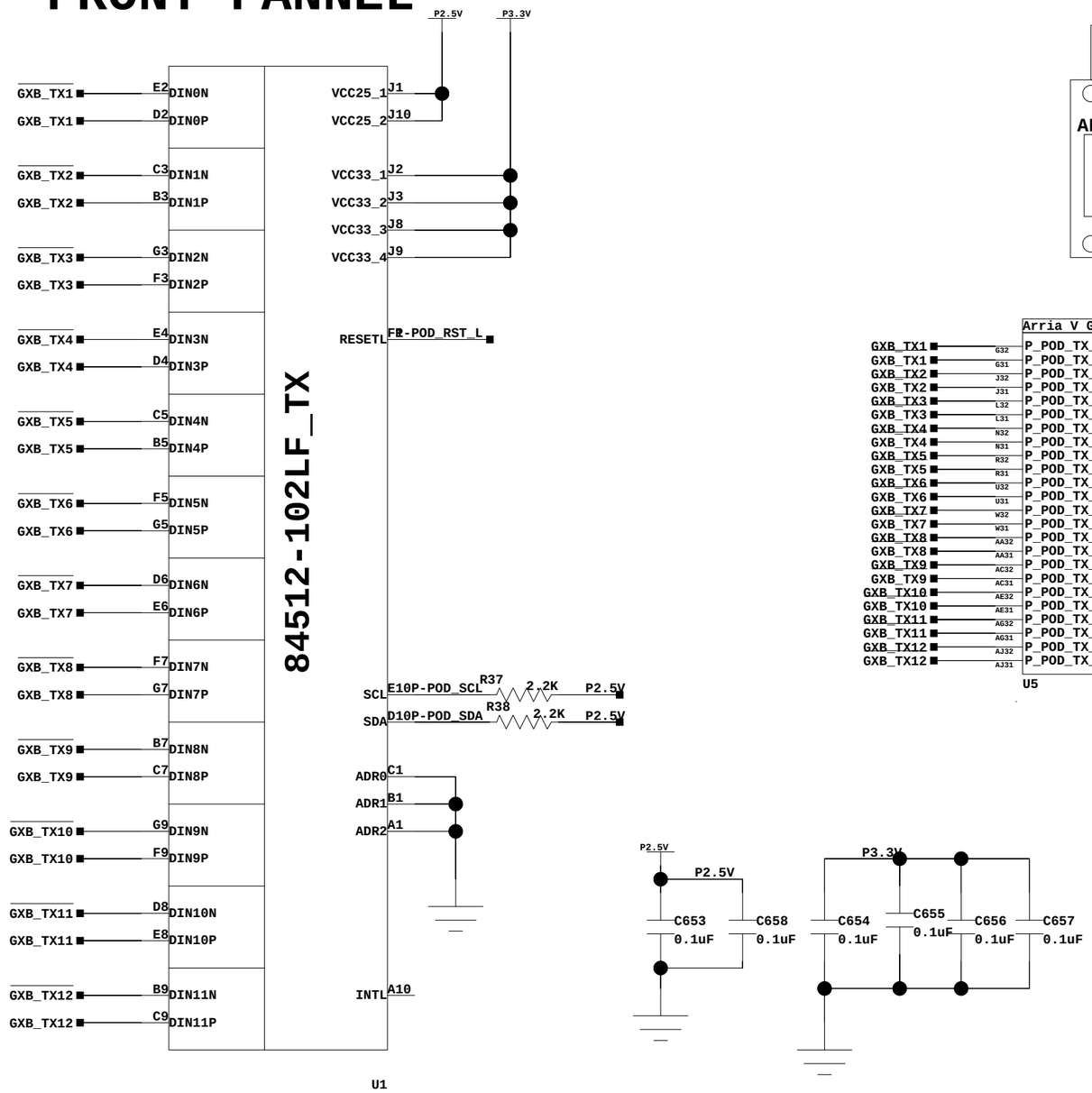

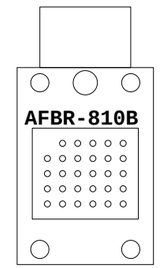

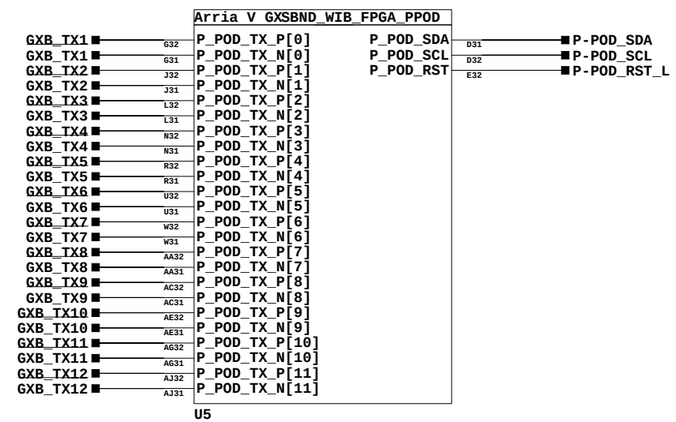

BROOKHAVEN NATIONAL LABORATORY
INSTRUMENTATION DIVISION

TITLE **WIB_P_POD**

SIZE B	BOARD : SBND_WIB_V2
DRAWN : Jack Fried	DATE : 19/10/2016:17:29

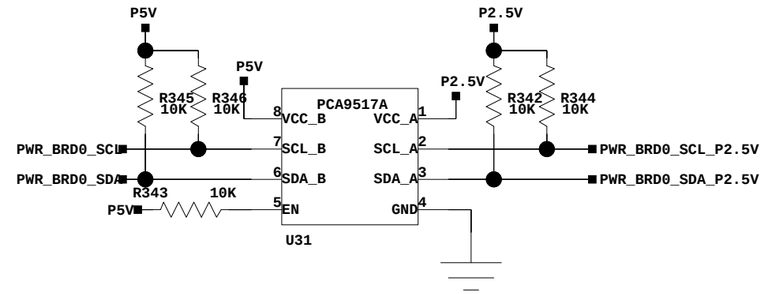

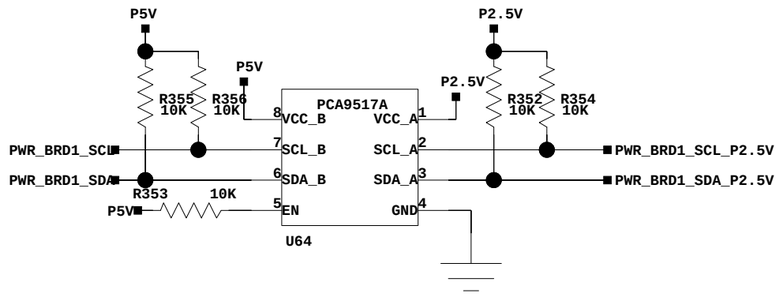

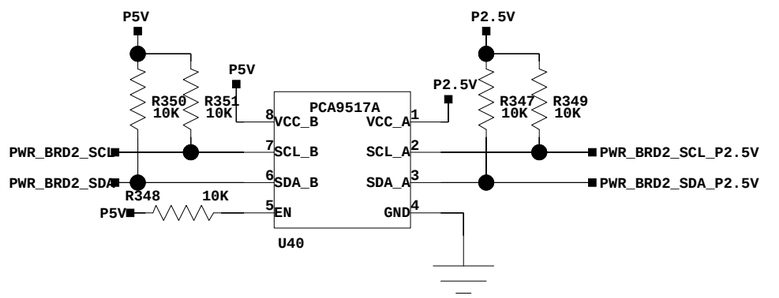

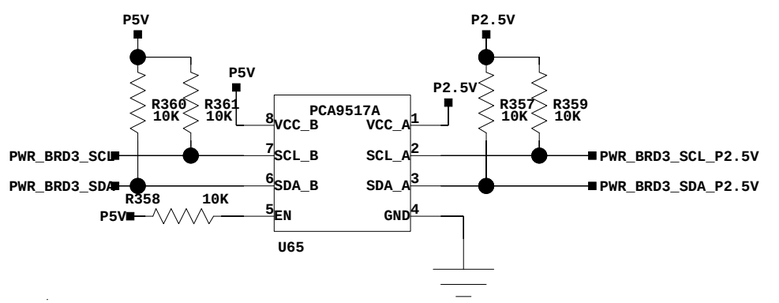

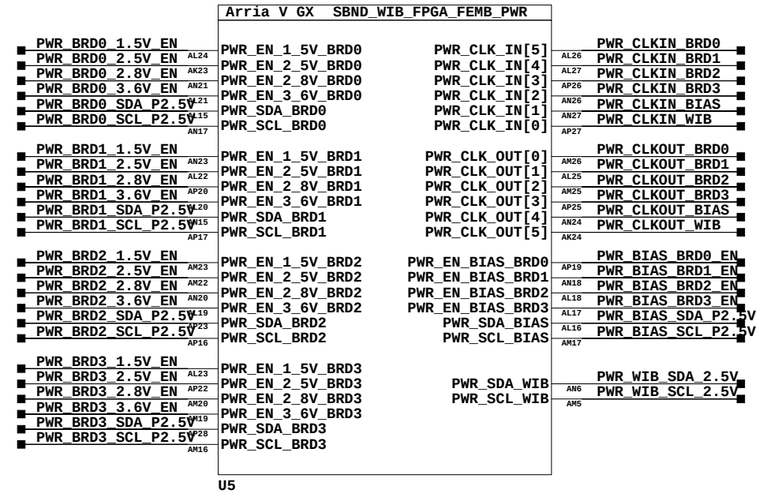

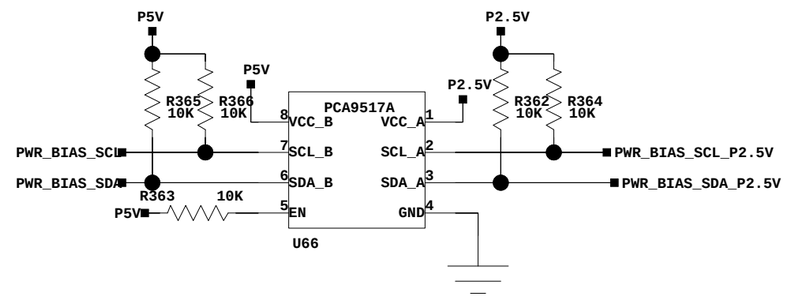

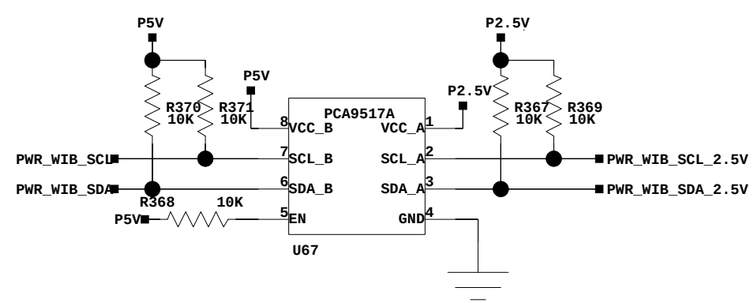

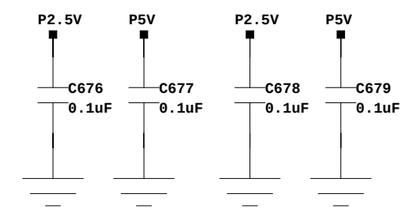

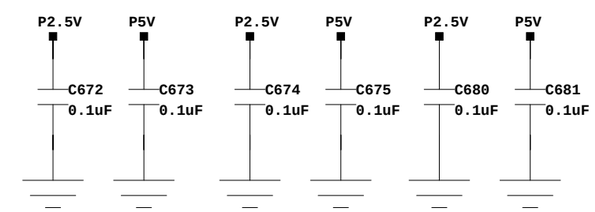

BROOKHAVEN NATIONAL LABORATORY
INSTRUMENTATION DIVISION

TITLE
WIB_FEMB_PWR_CNTL

SIZE B	BOARD : SBND_WIB_V2
DRAWN : Jack Fried	DATE : 19/10/2016:17:29

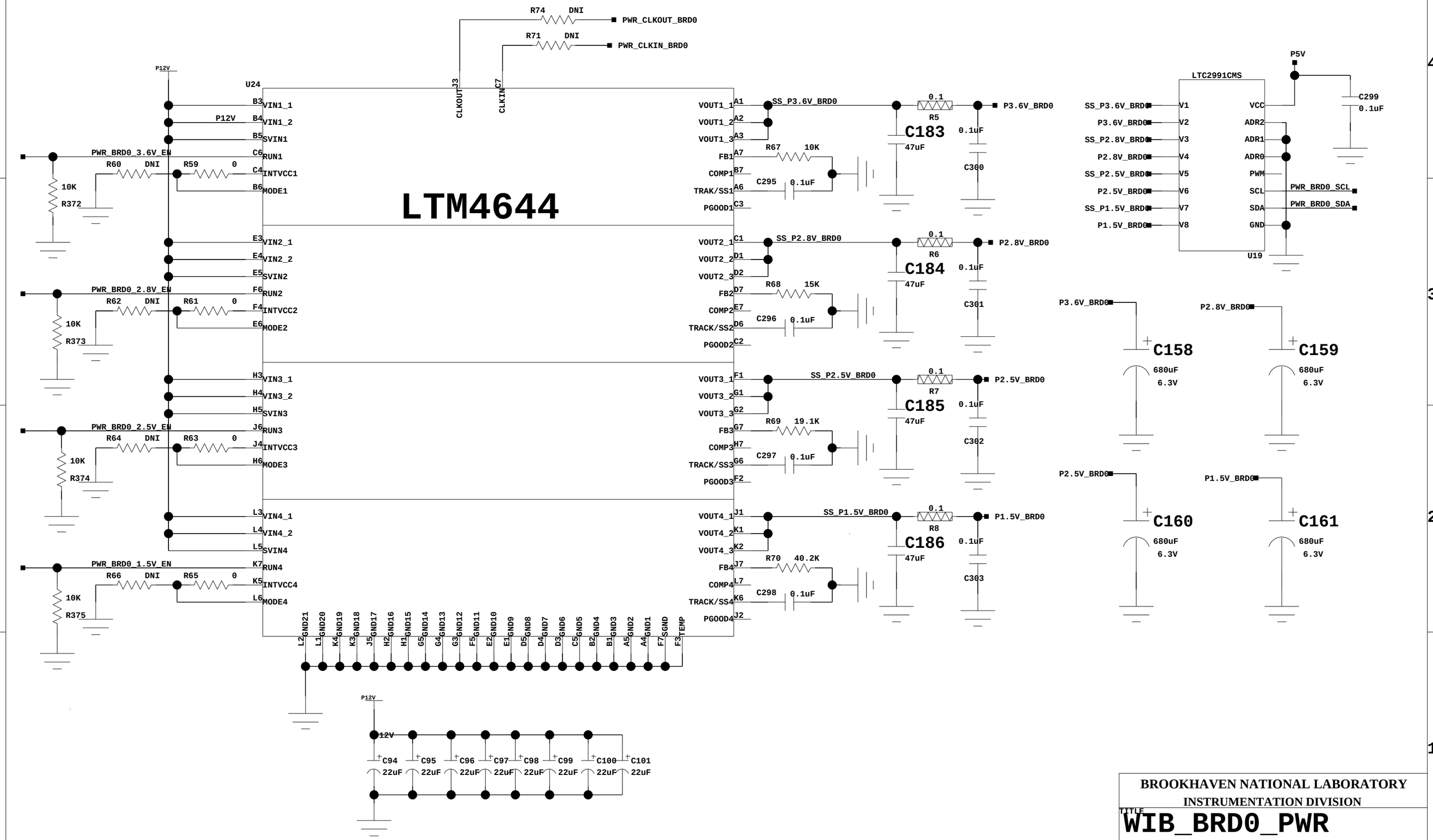

BROOKHAVEN NATIONAL LABORATORY
INSTRUMENTATION DIVISION

TITLE
WIB_BRD0_PWR

SIZE B	BOARD : SBND_WIB_V2
DRAWN : Jack Fried	DATE : 19/10/2016:17:13

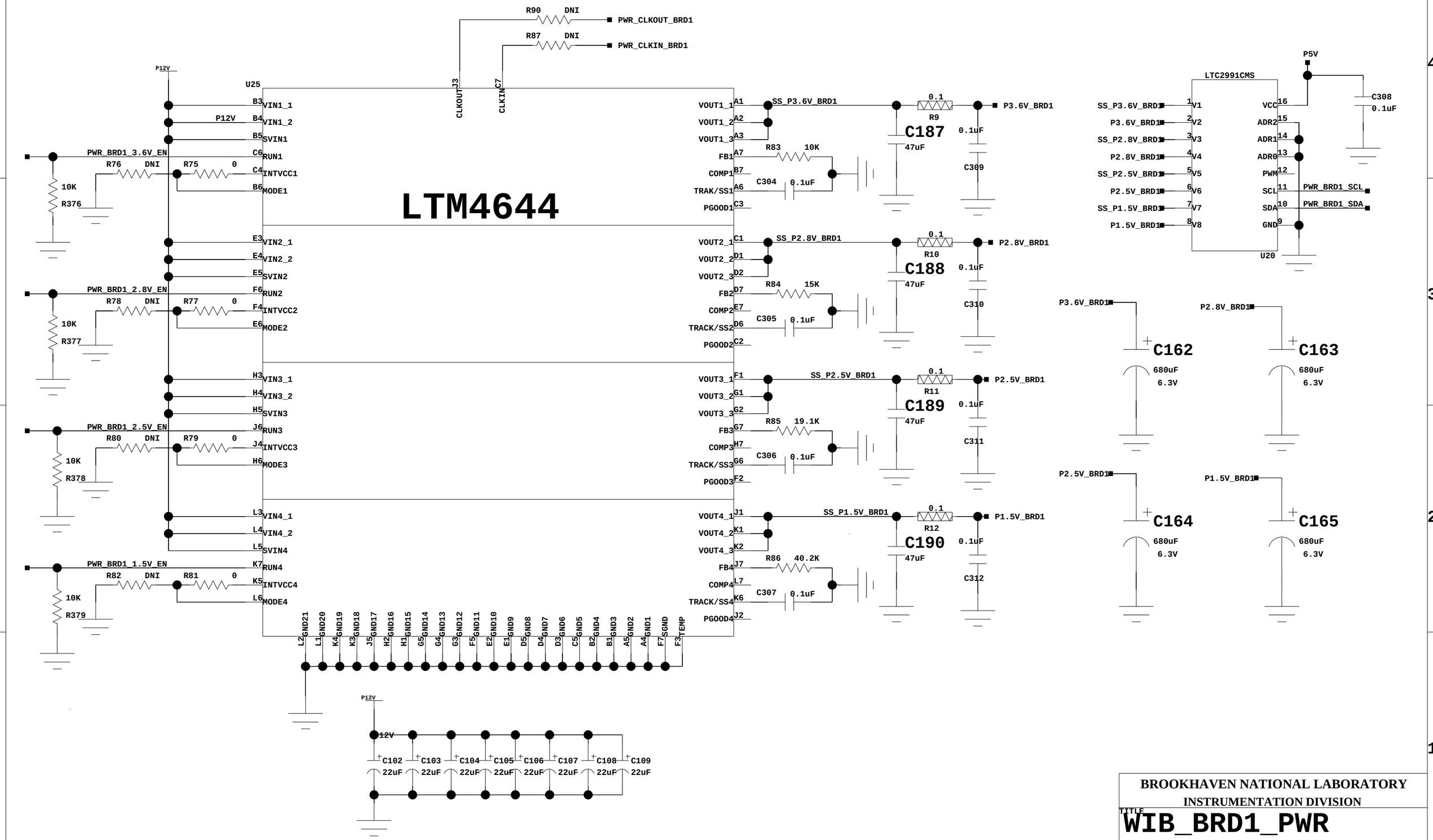

BROOKHAVEN NATIONAL LABORATORY
INSTRUMENTATION DIVISION

TITLE
WIB_BRD1_PWR

SIZE B	BOARD : SBND_WIB_V2
DRAWN : Jack Fried	DATE : 14/10/2016:15:10

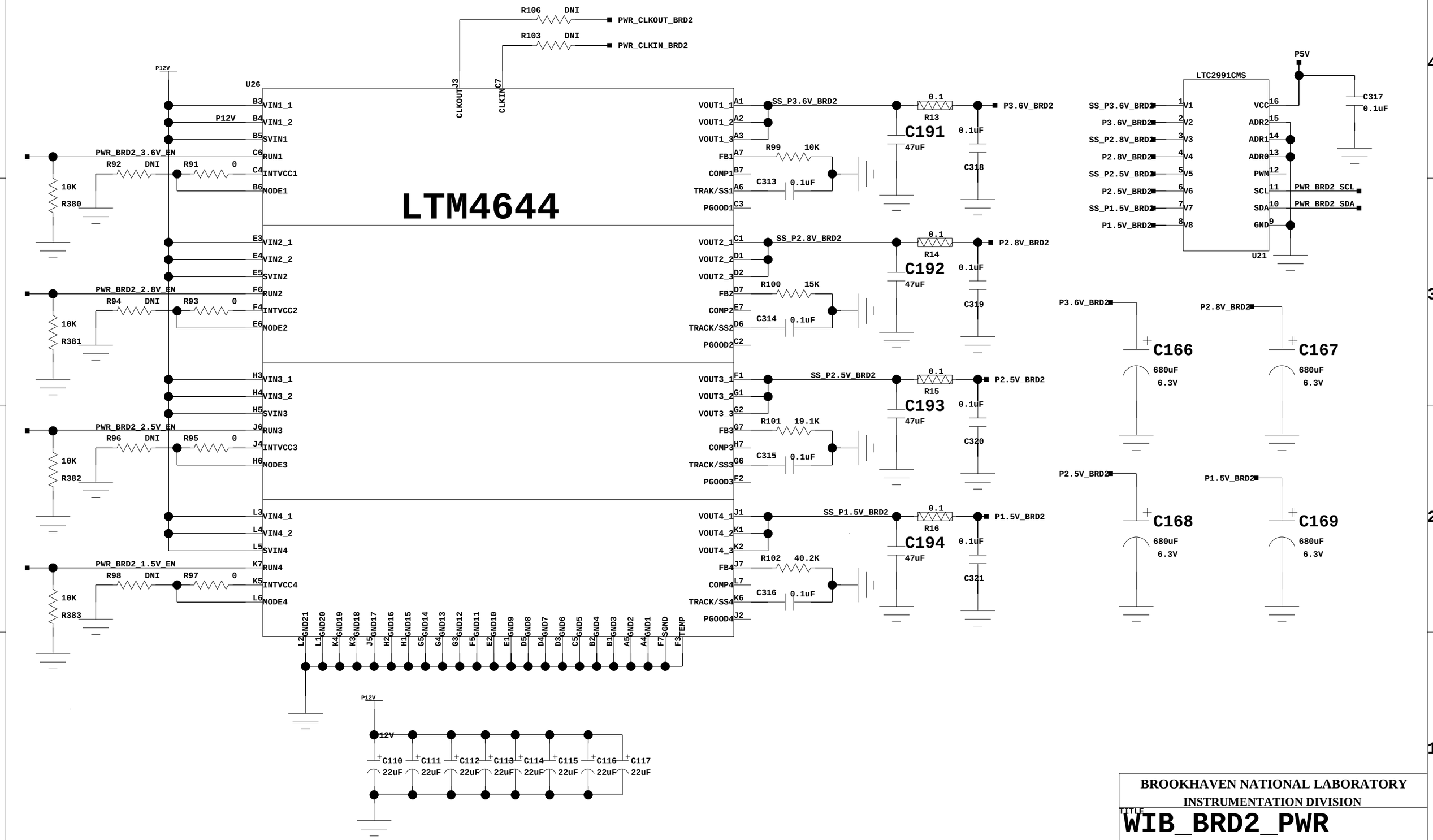

BROOKHAVEN NATIONAL LABORATORY
INSTRUMENTATION DIVISION

TITLE
WIB_BRD2_PWR

SIZE B	BOARD : SBND_WIB_V2
DRAWN : Jack Fried	DATE : 14/10/2016:15:10

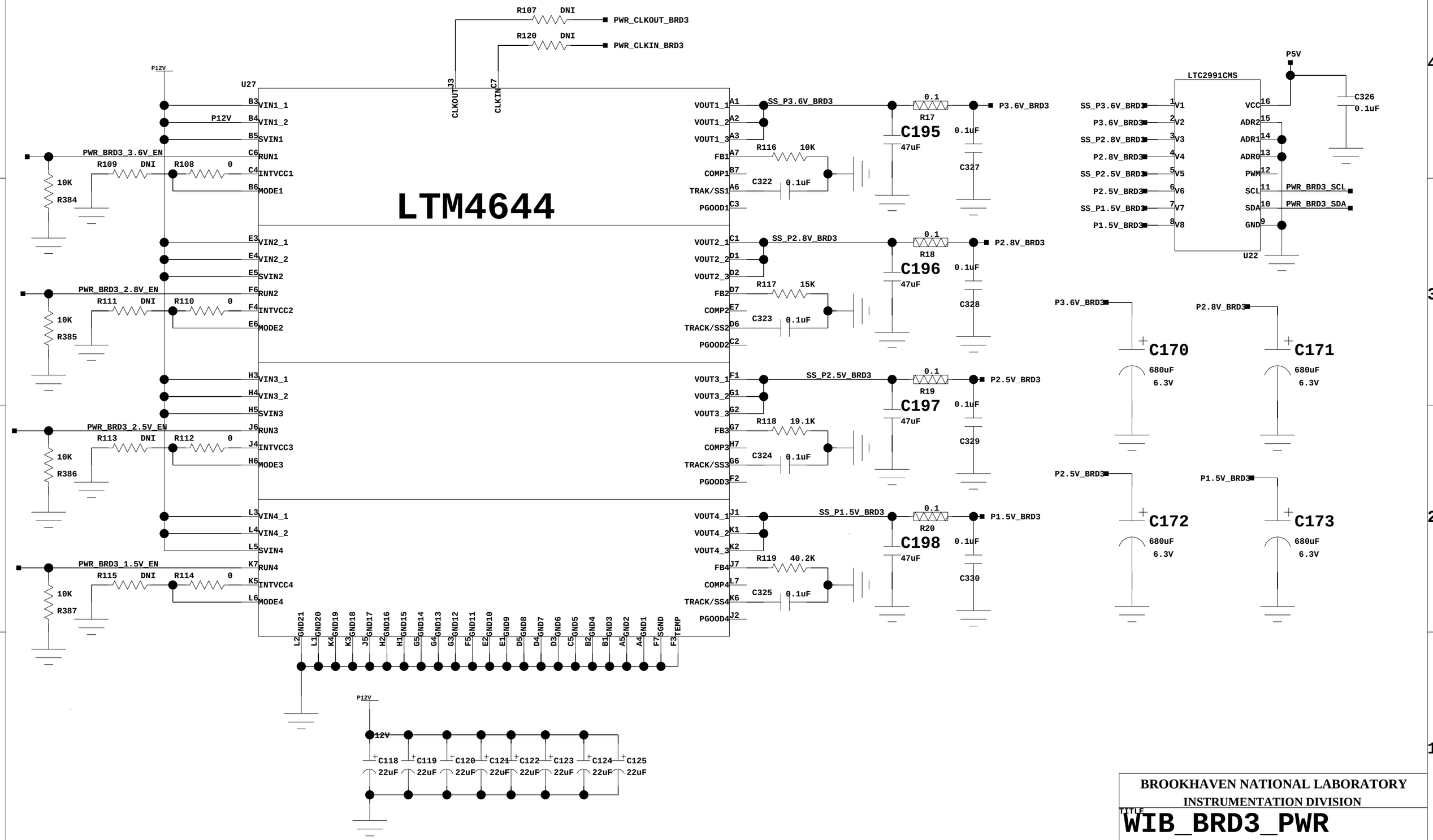

BROOKHAVEN NATIONAL LABORATORY
INSTRUMENTATION DIVISION

TITLE
WIB_BRD3_PWR

SIZE B	BOARD : SBND_WIB_V2
DRAWN : Jack Fried	DATE : 14/10/2016:15:10

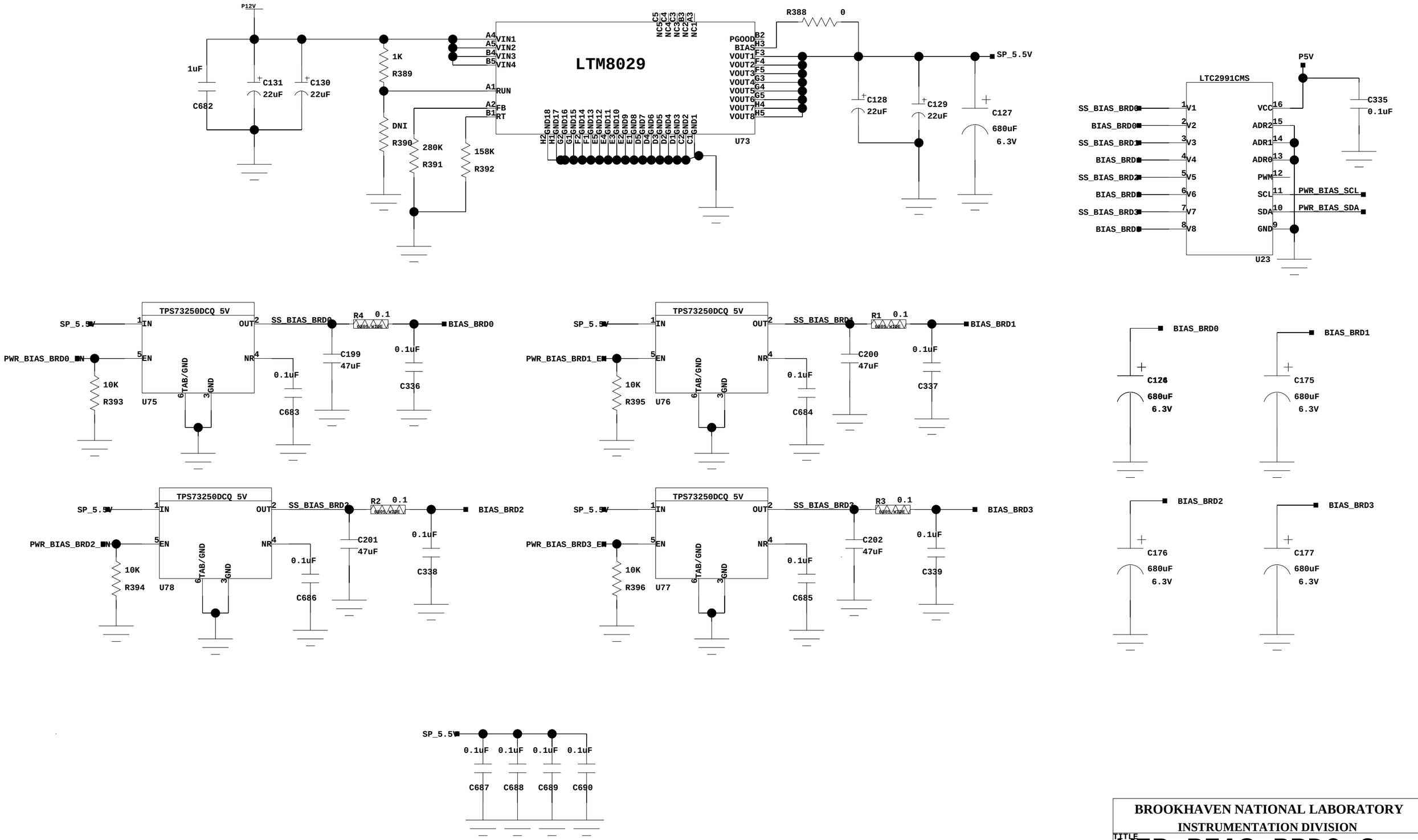

BROOKHAVEN NATIONAL LABORATORY

INSTRUMENTATION DIVISION

TITLE **WIB_BIAS_BRD0-3**

SIZE B	BOARD : SBND_WIB_V2
DRAWN : Jack Fried	DATE : 14/10/2016:15:10

FRONT PANNEL

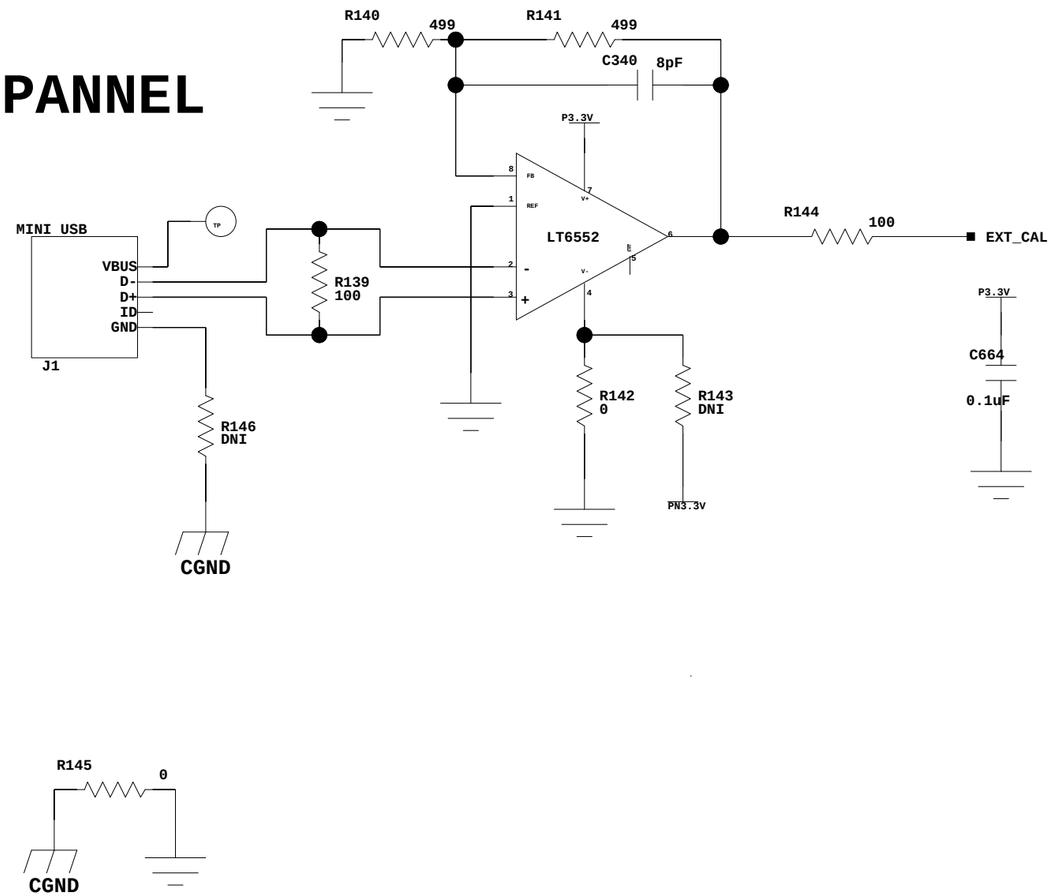

BROOKHAVEN NATIONAL LABORATORY
INSTRUMENTATION DIVISION

TITLE
WIB EXT CALB INPUT

SIZE B	BOARD : SBND_WIB_V2
DRAWN : Jack Fried	DATE : 14/10/2016:13:05

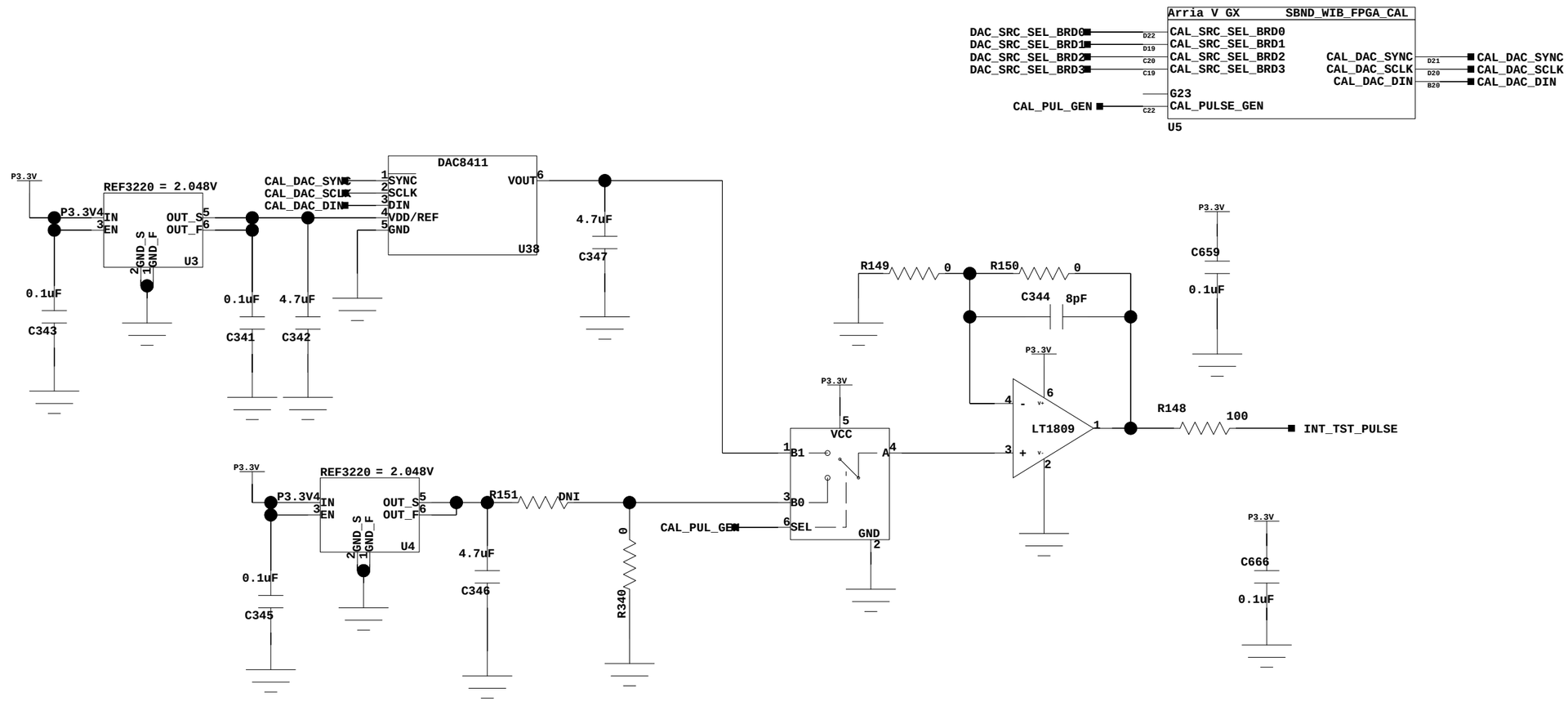

BROOKHAVEN NATIONAL LABORATORY
INSTRUMENTATION DIVISION

TITLE
WIB INT CAL DAC

SIZE B	BOARD : SBND_WIB_V2
DRAWN : Jack Fried	DATE : 19/10/2016:17:29

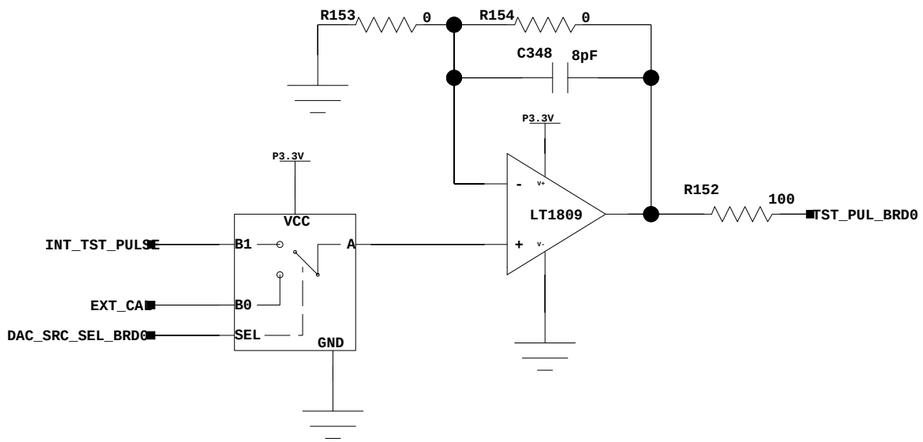

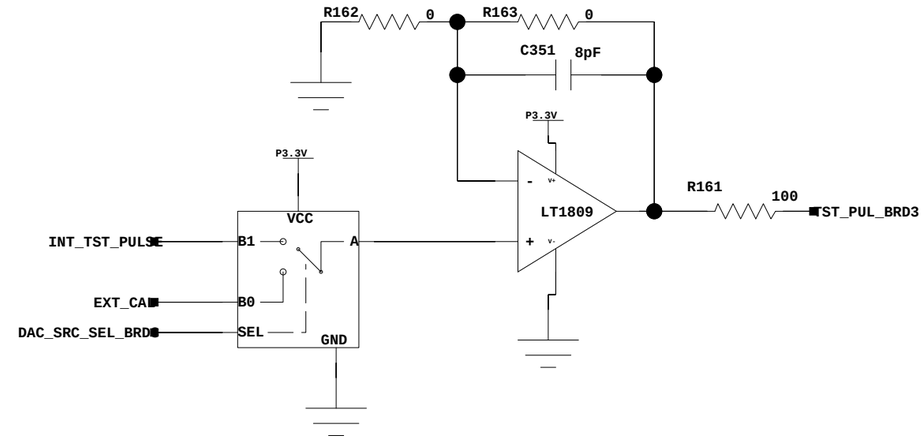

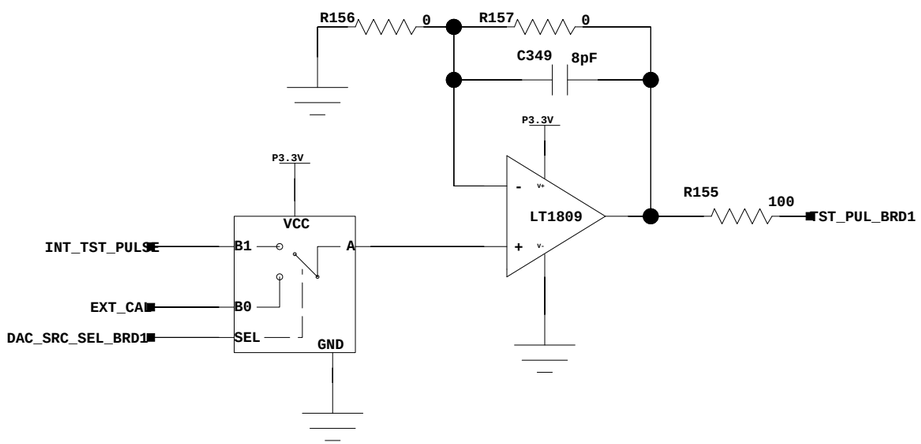

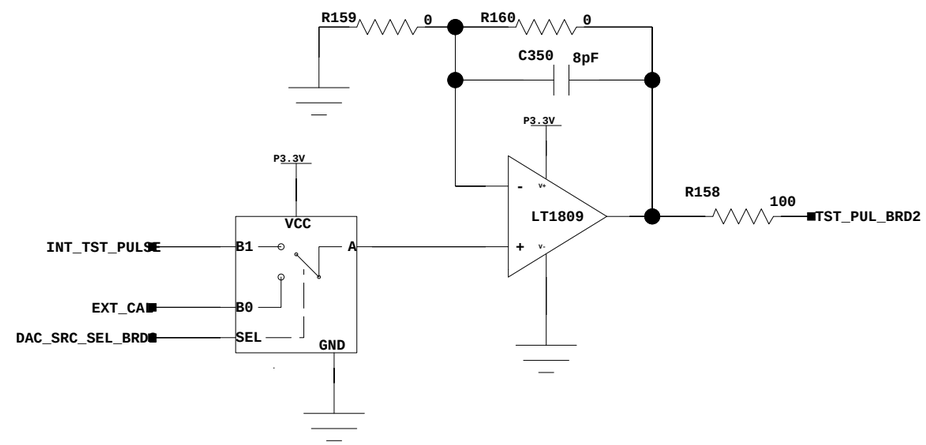

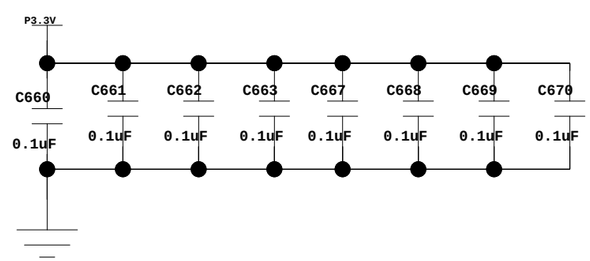

BROOKHAVEN NATIONAL LABORATORY
INSTRUMENTATION DIVISION

TITLE
WIB_CAL_DRIVERS

SIZE B	BOARD : SBND_WIB_V2
DRAWN : Jack Fried	DATE : 14/10/2016:12:59

FRONT PANNEL

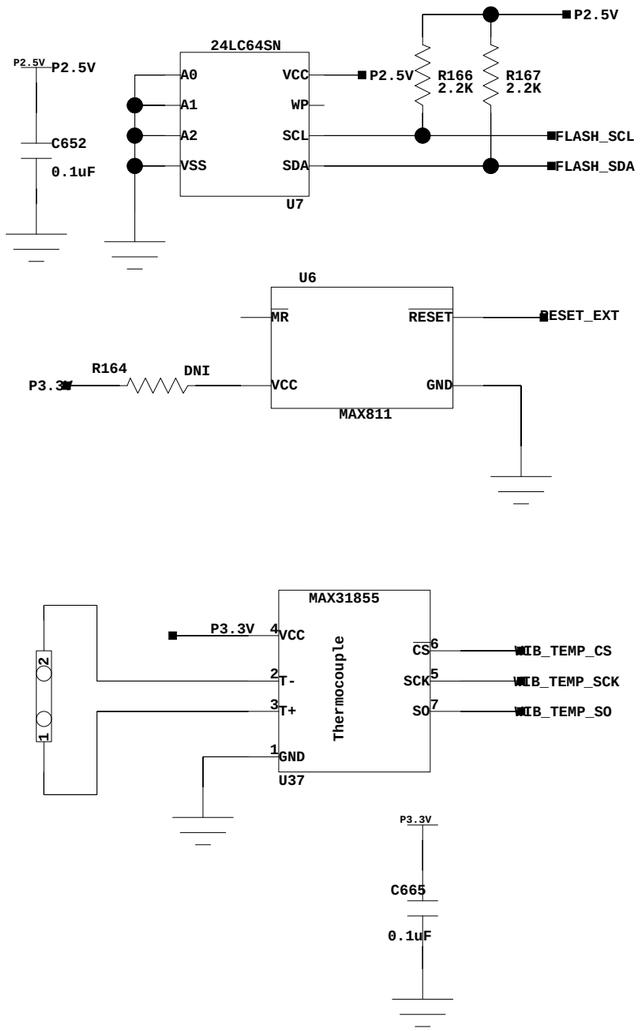

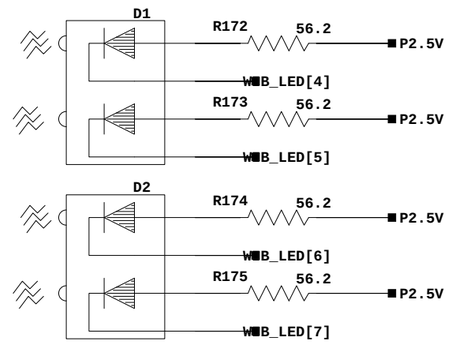

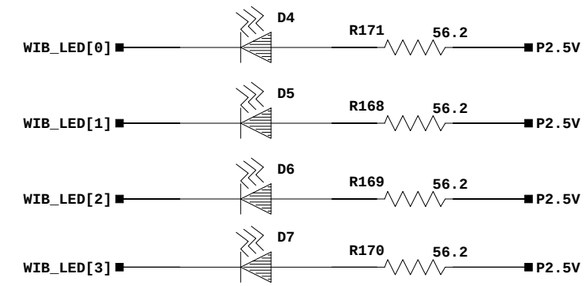

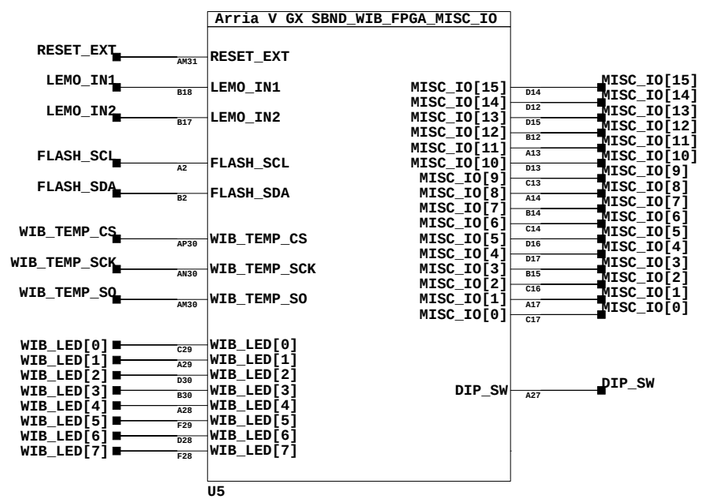

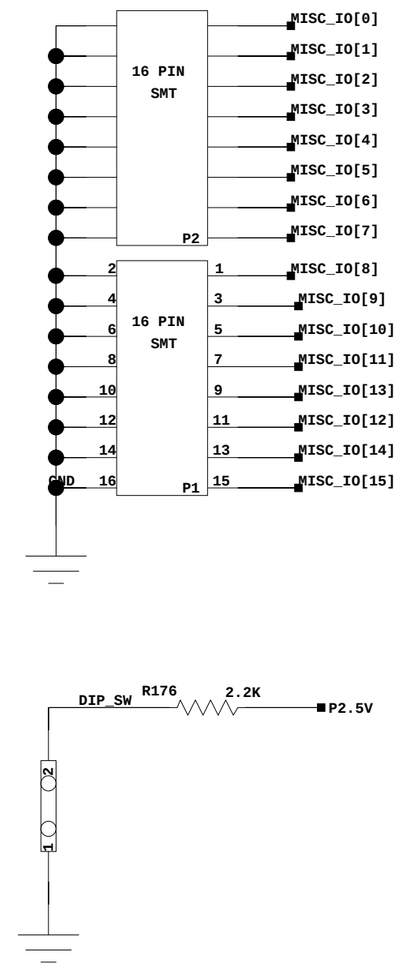

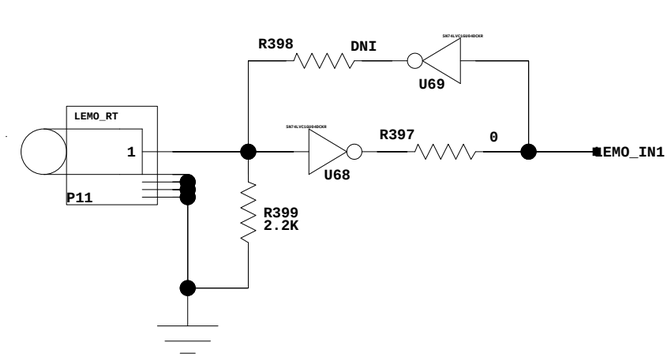

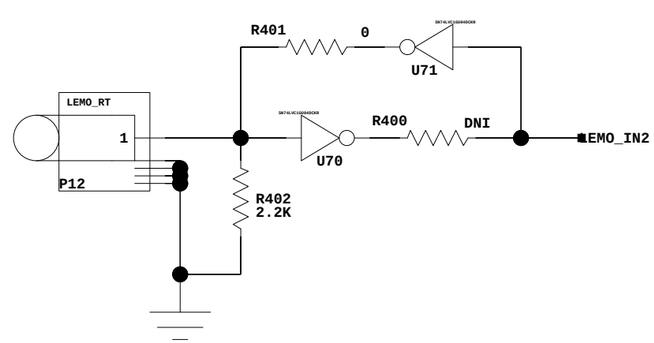

BROOKHAVEN NATIONAL LABORATORY
INSTRUMENTATION DIVISION

TITLE
WIB_MISC_IO

SIZE B	BOARD : SBND_WIB_V2
DRAWN : Jack Fried	DATE : 19/10/2016:17:29

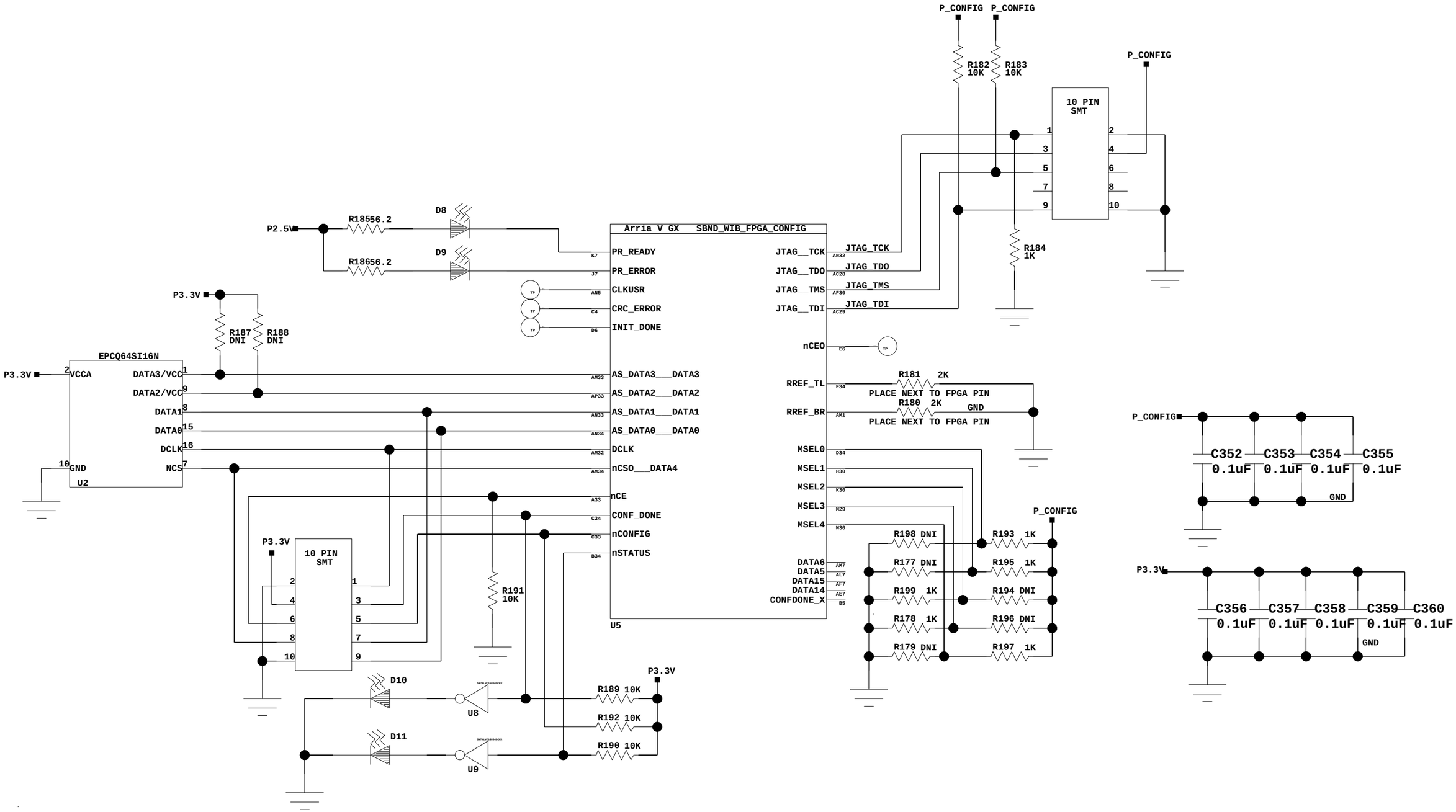

BROOKHAVEN NATIONAL LABORATORY
INSTRUMENTATION DIVISION

TITLE
WIB_FPGA_CONFIG

SIZE B	BOARD : SBND_WIB_V2
DRAWN : Jack Fried	DATE : 19/10/2016:17:29

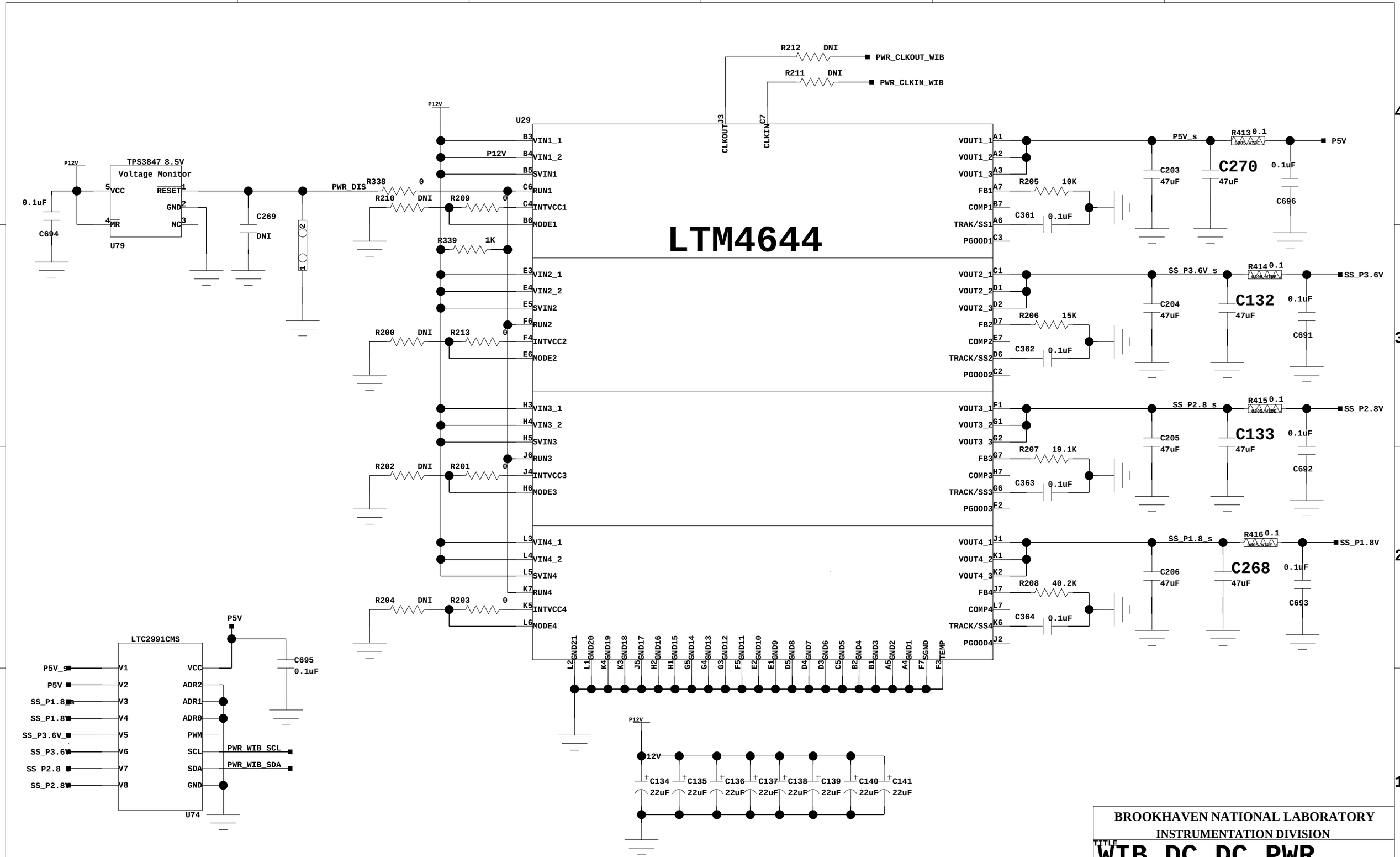

BROOKHAVEN NATIONAL LABORATORY
INSTITUTION DIVISION

TITLE
WIB_DC_DC_PWR

SIZE B	BOARD : SBND_WIB_V2
DRAWN : Jack Fried	DATE : 14/10/2016:15:10

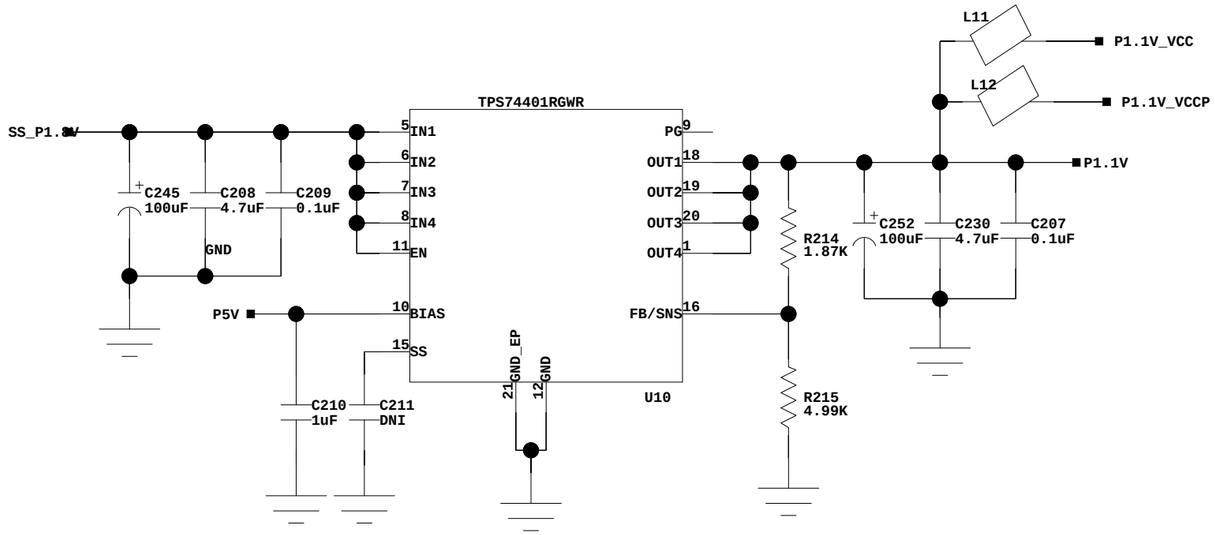

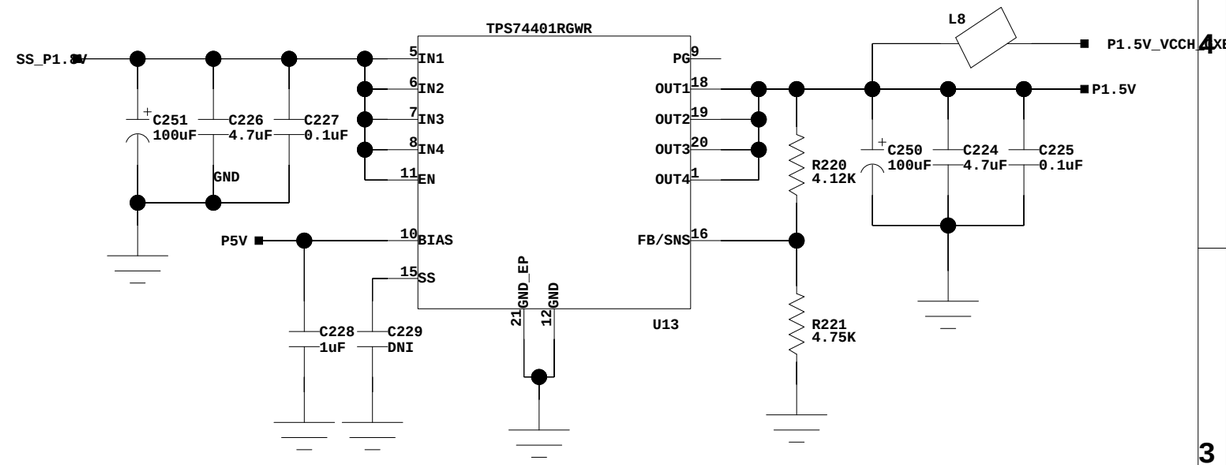

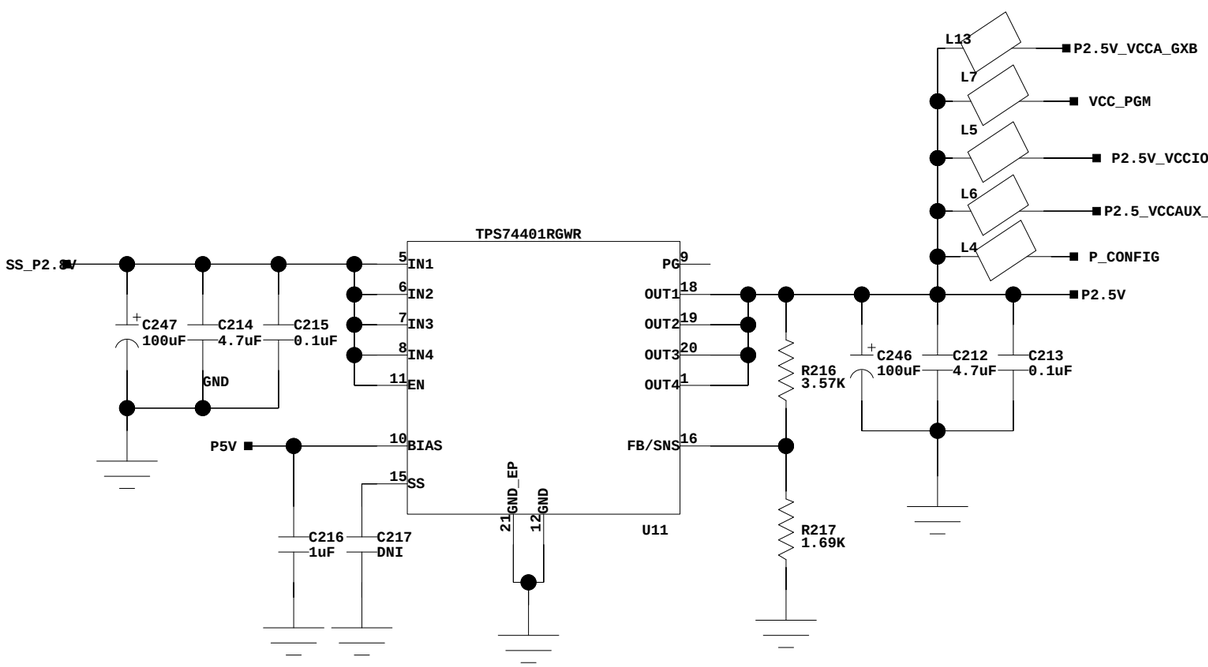

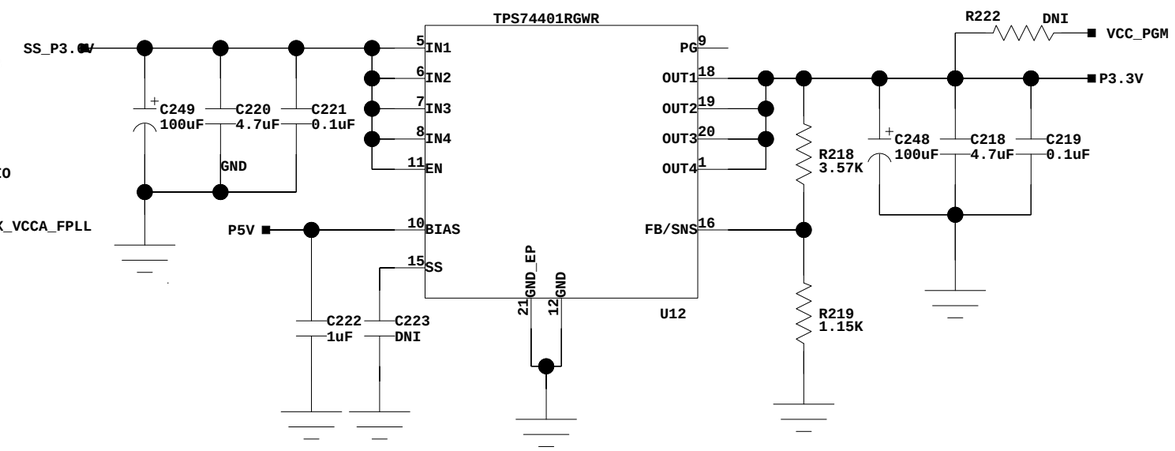

BROOKHAVEN NATIONAL LABORATORY

INSTRUMENTATION DIVISION

TITLE

WIB_LINEAR_PWR_1

SIZE B	BOARD : SBND_WIB_V2
DRAWN : Jack Fried	DATE : 14/10/2016:12:59

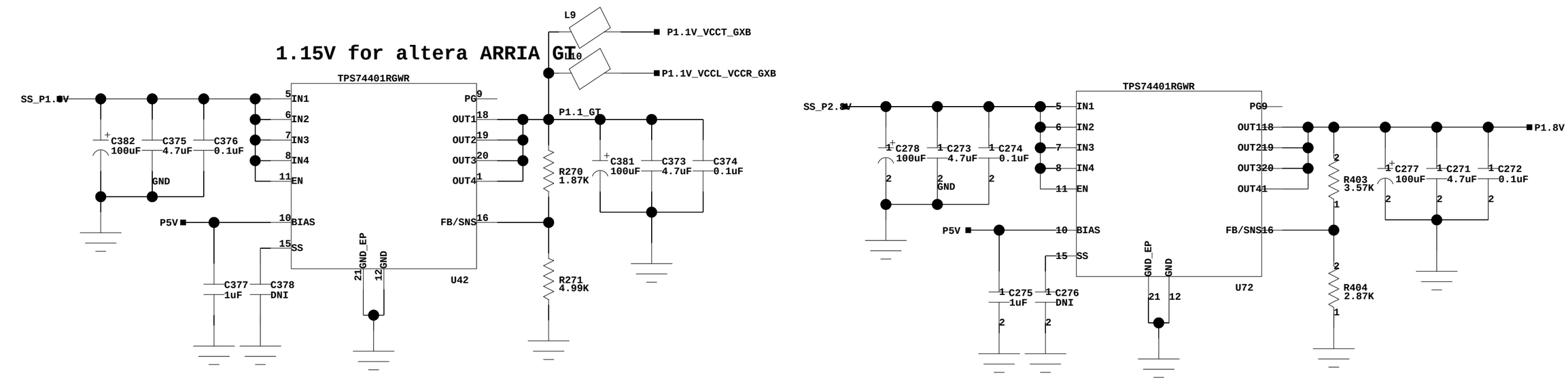

BROOKHAVEN NATIONAL LABORATORY
INSTRUMENTATION DIVISION

TITLE
WIB_LINEAR_PWR_2

SIZE B	BOARD : SBND_WIB_V2
DRAWN : Jack Fried	DATE : 19/10/2016:17:19

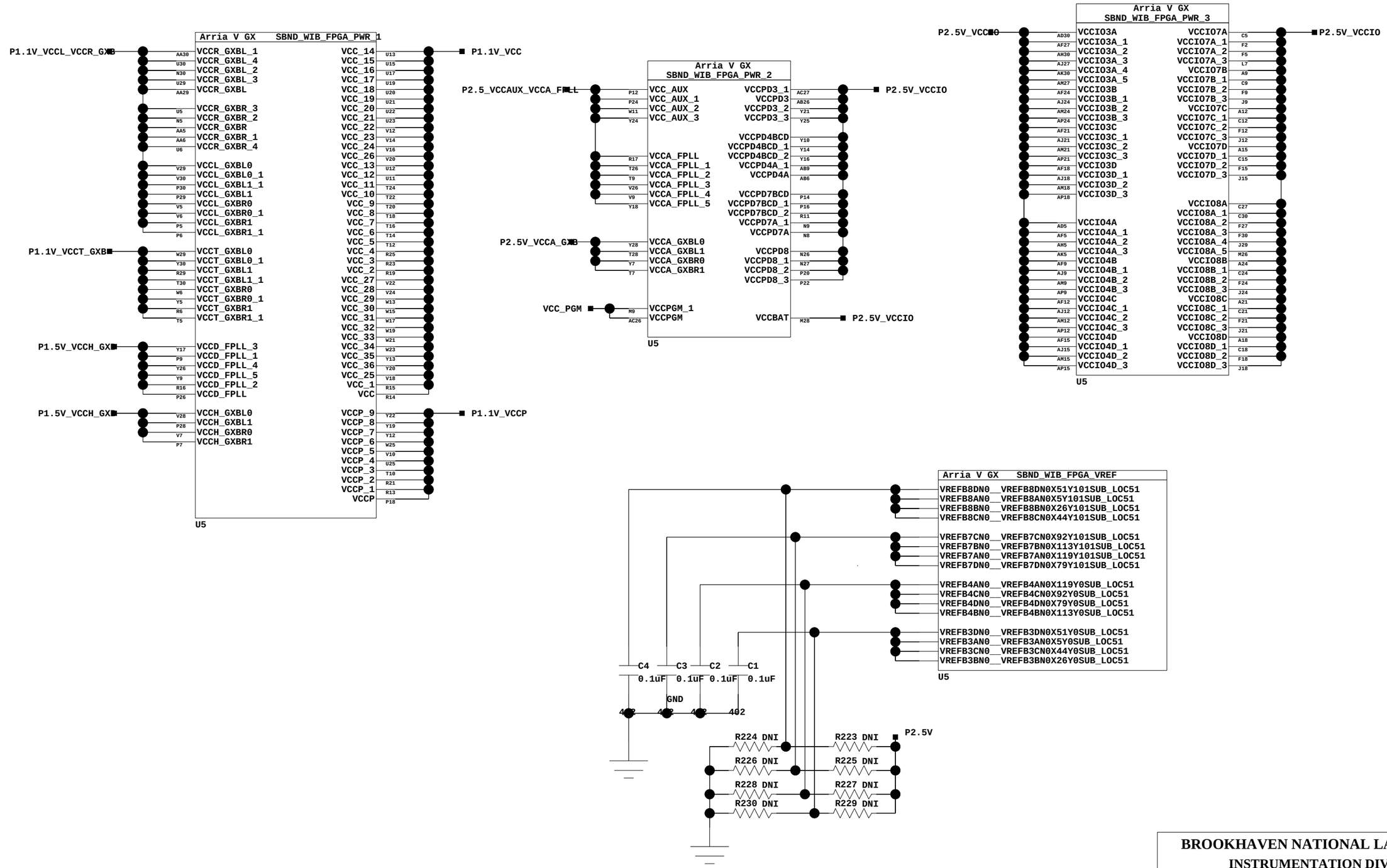

BROOKHAVEN NATIONAL LABORATORY
INSTRUMENTATION DIVISION

TITLE
WIB_FPGA_PWR

SIZE B	BOARD : SBND_WIB_V2
DRAWN : Jack Fried	DATE : 19/10/2016:17:29

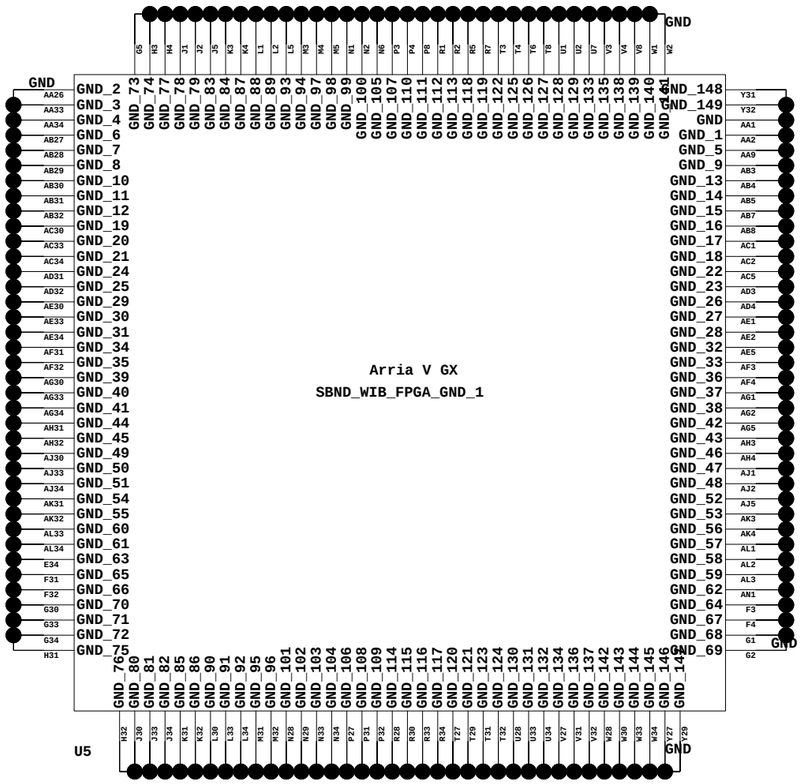

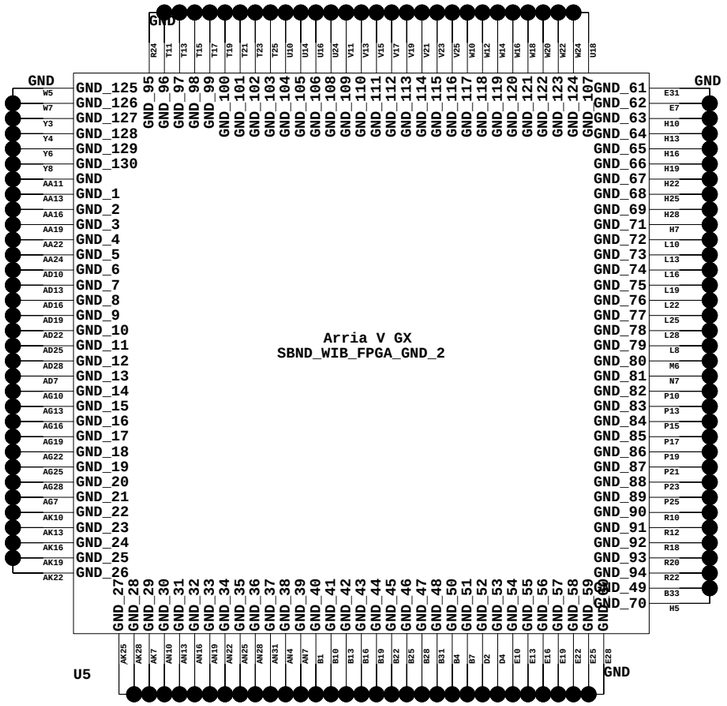

BROOKHAVEN NATIONAL LABORATORY
INSTRUMENTATION DIVISION

TITLE
WIB_FPGA_GND

SIZE B	BOARD : SBND_WIB_V2
DRAWN : Jack Fried	DATE : 19/10/2016:17:29

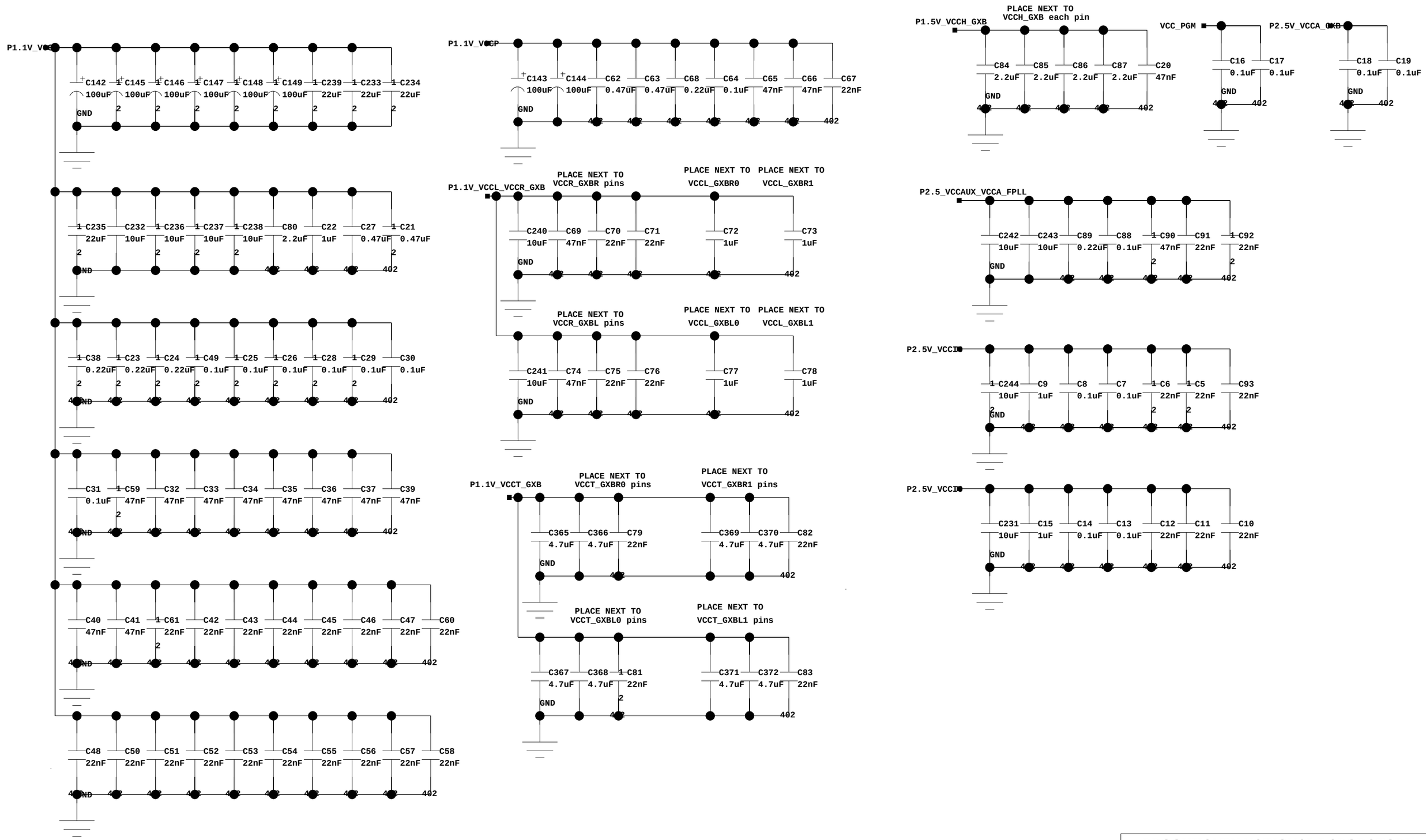

BROOKHAVEN NATIONAL LABORATORY
INSTRUMENTATION DIVISION

TITLE
WIB_FPGA_DECOUPLING

SIZE B	BOARD : SBND_WIB_V2
DRAWN : Jack Fried	DATE : 19/10/2016:17:19

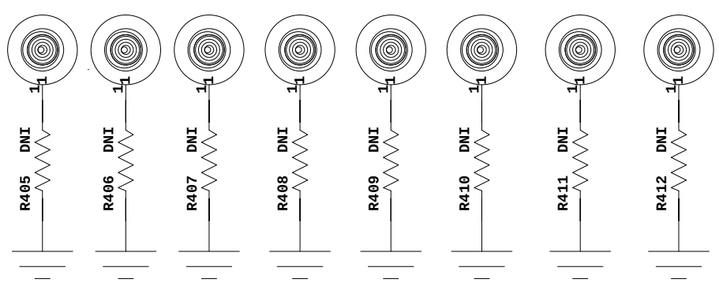

BROOKHAVEN NATIONAL LABORATORY
INSTRUMENTATION DIVISION

TITLE
WIB_FPGA_EXTRA_IO

SIZE B	BOARD : SBND_WIB_V2
DRAWN : Jack Fried	DATE : 19/10/2016:17:29