SPIE Astronomical Telescopes and Instrumentation

LSST Instrument Concept

B. Starr, C. Claver, S. Wolff, J.A. Tyson, L.Daggert,
M. Lesser, R. Dominguez, R. Gomez, G. Muller

NOAO
Bell Labs / Lucent Technologies
University of Arizona

LSST Project Overview

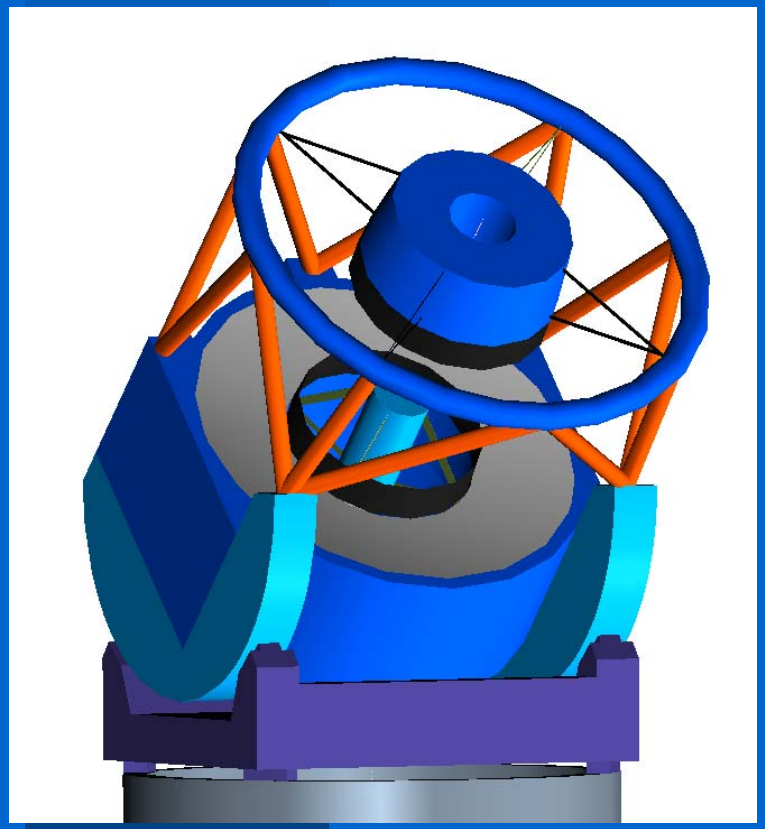

- 8.4 meter telescope
- 3 mirror f/1.25 optical design
- 3 degree diameter circular FOV
- 80% encircled energy in 0.2 “
- 24th magnitude in 10s
- Designed to maximize fig of merit:

$$\frac{N}{t} = \frac{\varphi_{obj}^2 \, A \, \Omega \, QE \, \varepsilon}{(SNR)^2 \varphi_{sky} (\delta\Omega)}$$

- Single optical instrument (0.3 – 1um)

- Battle cry: “Go Faint Fast !!!”

Picture Courtesy of Warren Davison of Steward Observatory ref 4836-18

LSST Operation Mode

- Survey the entire visible sky every 4 nights
- Requires cadence of 15 seconds
  - 10 sec. exposure
  - 5 sec. overhead
    - Read array
    - Re-point
    - Shutter open-close

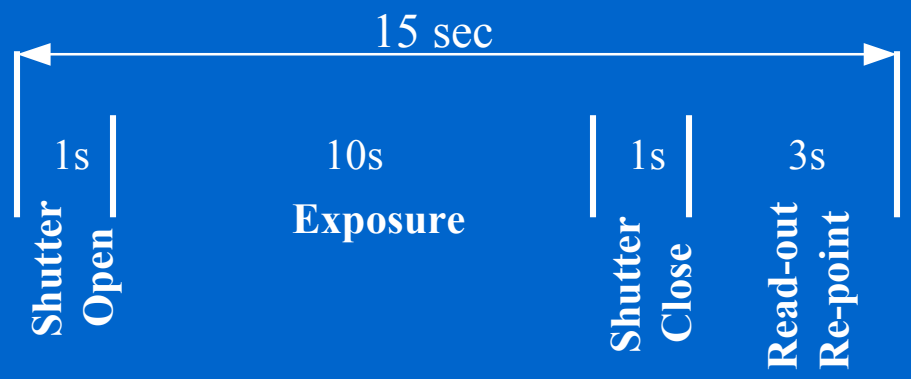

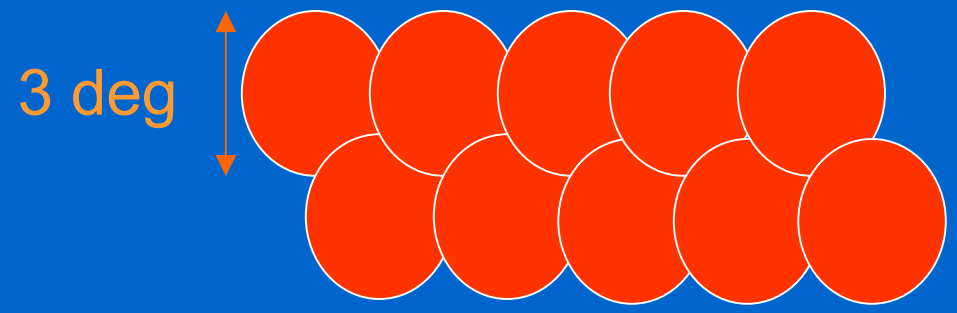

LSST Operation Mode

- Surv… ghts
- R…

Celestial Cinematography

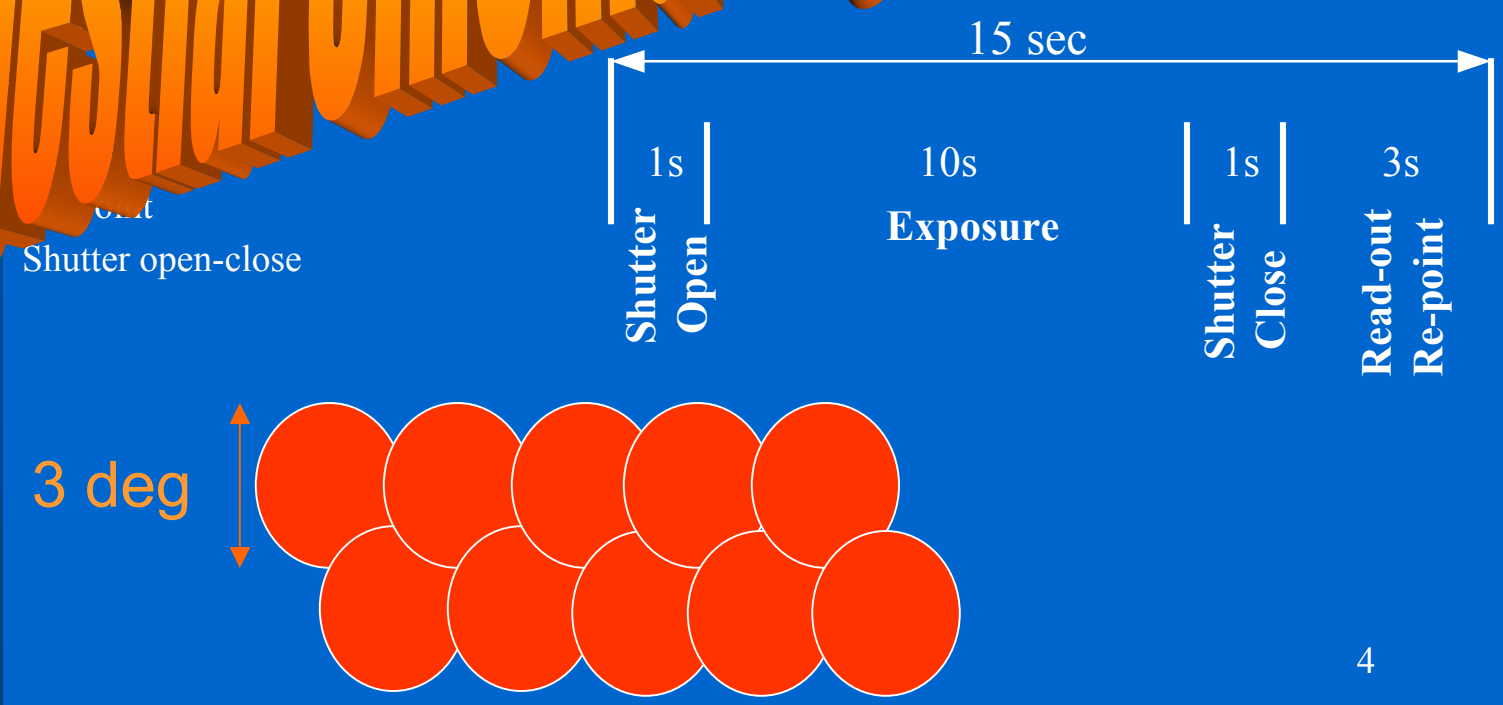

LSST Instrument Definition

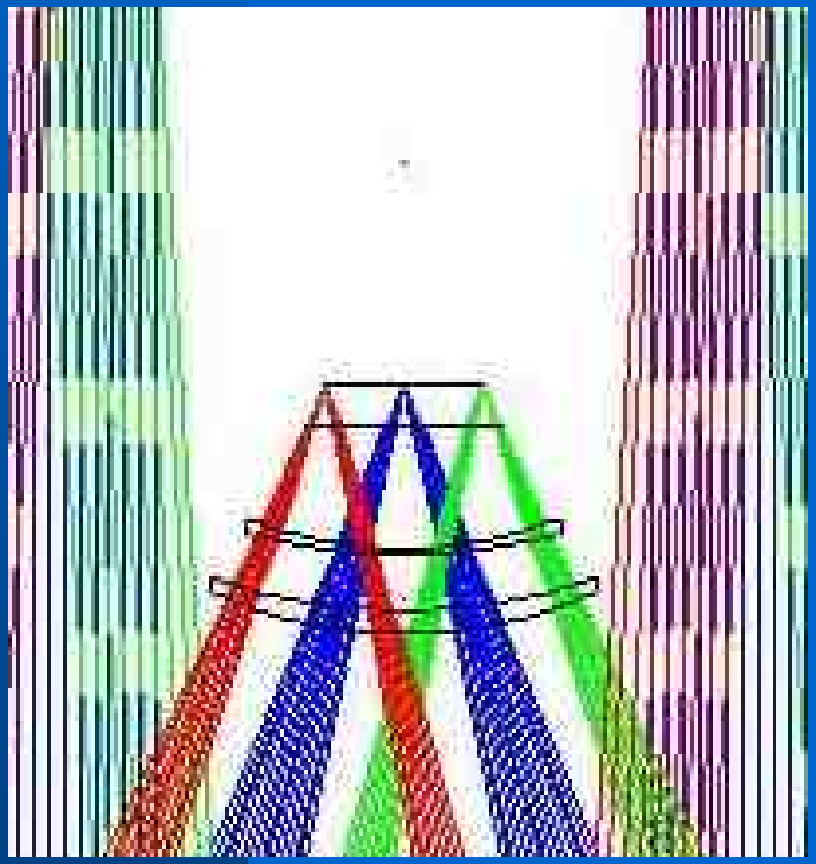

Picture Courtesy of DMT Website: http://dmtelescope.org/.

- Focal plane diameter:
  - 55cm (3 deg FOV, f/1.25)
- Image plate scale:
  - 51 microns/arcsec
- Pixel sampling:
  - < 0.2 arcsec/pixel
- Focal plane curvature
  - 25-30 m radius of curv.
  - Or??? Flat !!!!

LSST Focal Plane Definition

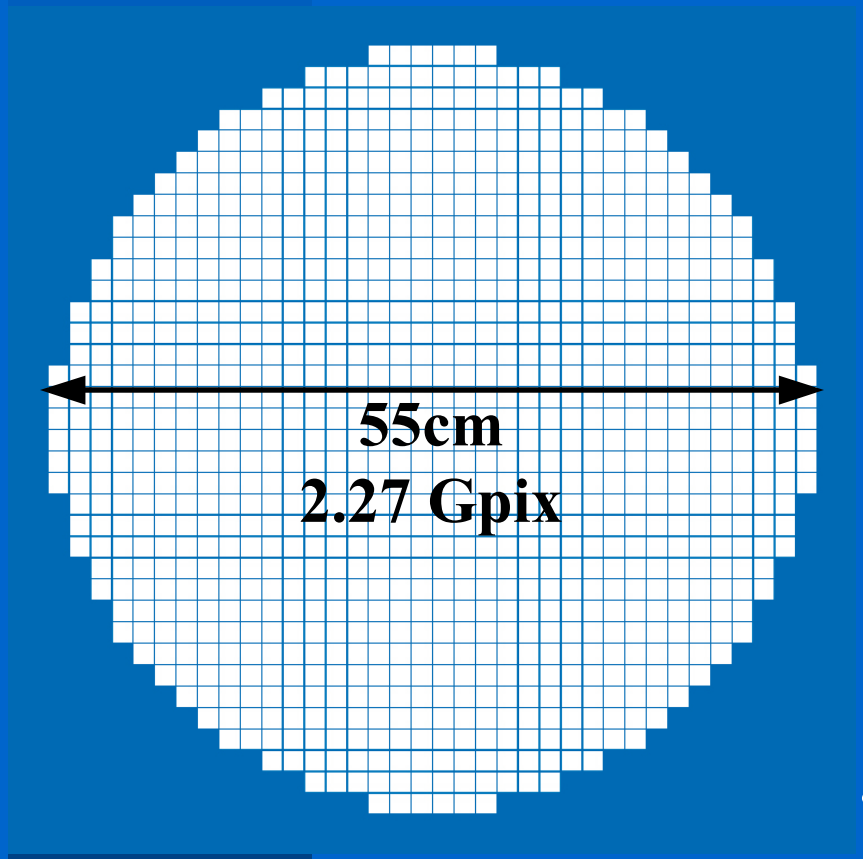

- Focal plane format :
  - Fully filled circular mosaic
- Pixel size = 10 um pixels
- Image size: 2.27 G pixels/image
  ~ Eq 47k x 47k mosaic
- Readout rate < 2 seconds
  - 1 MHz readout rate for 2kx2k detector (2 amp each)
  - Or 2MHz/# of outputs
- Minimum 4 color nightly operation capability

Key Performance Criteria

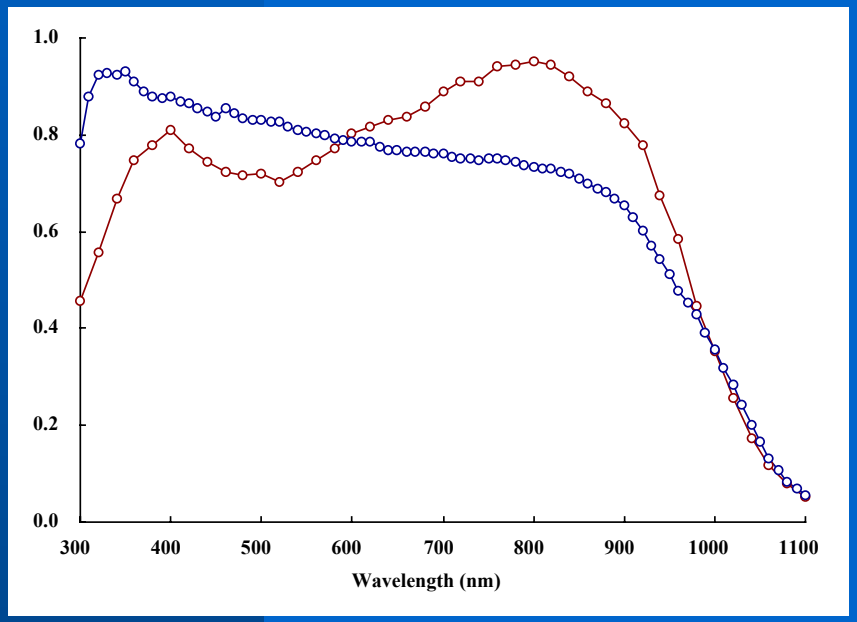

Courtesy of Barry Burke at MIT/LL

- QE > 80% (400 – 700nm)
- Readnoise < 5e- @ 2s ReadoutTime
- Nonlinearity < 1%
- Fullwell > 150k e-
- Dark Current < 0.1 e-/pix/s
- Stability
  - QE
  - Gain
  - Bias
  - Dark Current

Key Performance Criteria

- MTF effects
  - Pixel to pixel crosstalk
  - Charge diffusion
  - CTE
- Channel to channel crosstalk
- Fixed pattern noise (FPN)
- Photo-response Nonuniformity (PRNU)
- Fringing effects in the red
- Anti-blooming
- Residual image
- Radiation detection

Key Performance Criteria

- MTF effects
  - Pixel to pixel crosstalk
  - Charge diffusion
  - [illegible]
  - [illegible] crosstalk
  - [illegible] pattern noise (FPN)
- Photo-response Nonuniformity (PRNU)
- Fringing effects in the red
- Anti-blooming
- Residual image
- Radiation detection

Electronic Shuttering!

LSST Priority: Observing Efficiency

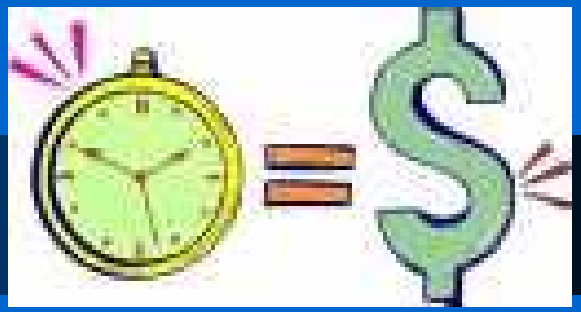

- Maximize "open shutter" integration time !!!
  - Every photon's sacred…
  - Telescope time is an increasingly costly commodity.
  - Support the relentless acquisition of images.

Instrument Constraints

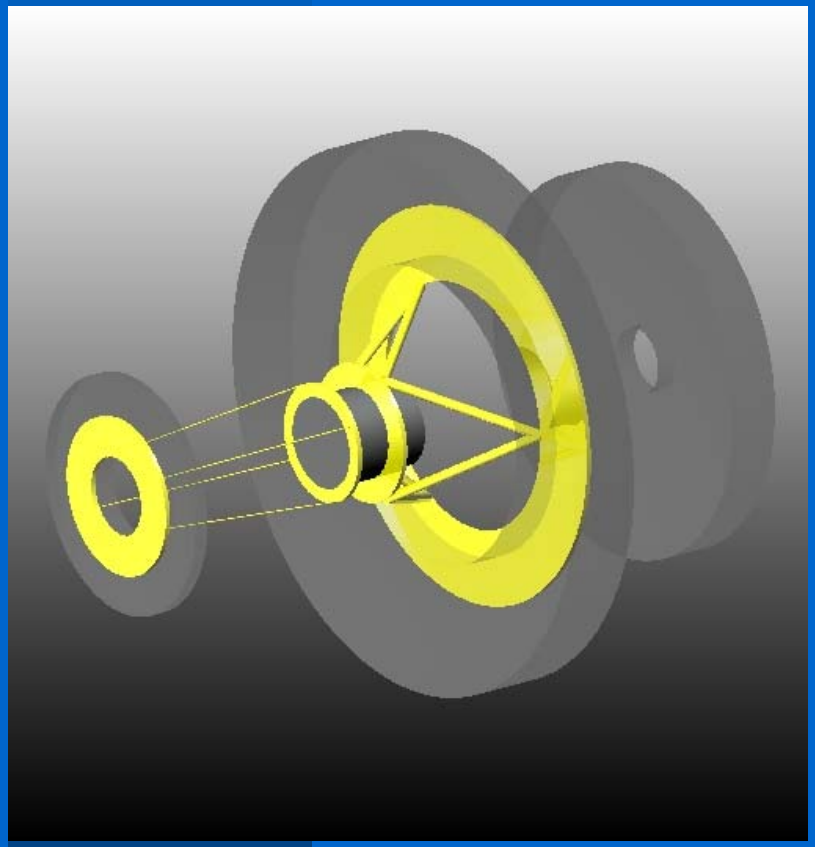

- Primary issue:
  - Instrument inside optical beam
- Volume
  - Limit radial size to prevent vignetting
- Weight
  - Limit moment for mounting and structure components
- Power dissipation
  - must be controlled to prevent thermal convection effects in the optical beam
- Cost < 20 million
- Schedule: build in 5 years

LSST Data Acquisition Requirements

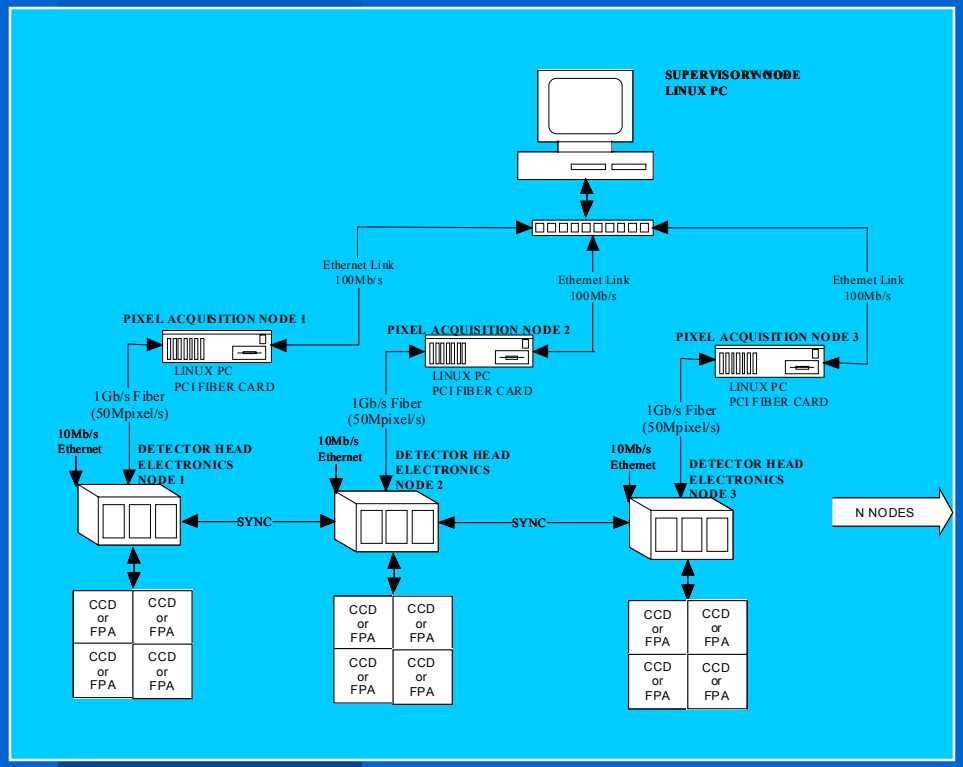

NOAO Monsoon
Scalable Image Acquisition System

- 10s "typ" exposure time
- 2 s readtime
- Avg exp efficiency = 0.82
- 2.27 G pix/exp/2s readtime
  - = 1.14 G pix/s peak pixel rate
  - = 2.27 G bytes/s peak data rate
- This can be handled with
  - 12 2.4 Gb/s SL240 Fibers

System Level Approach to Design

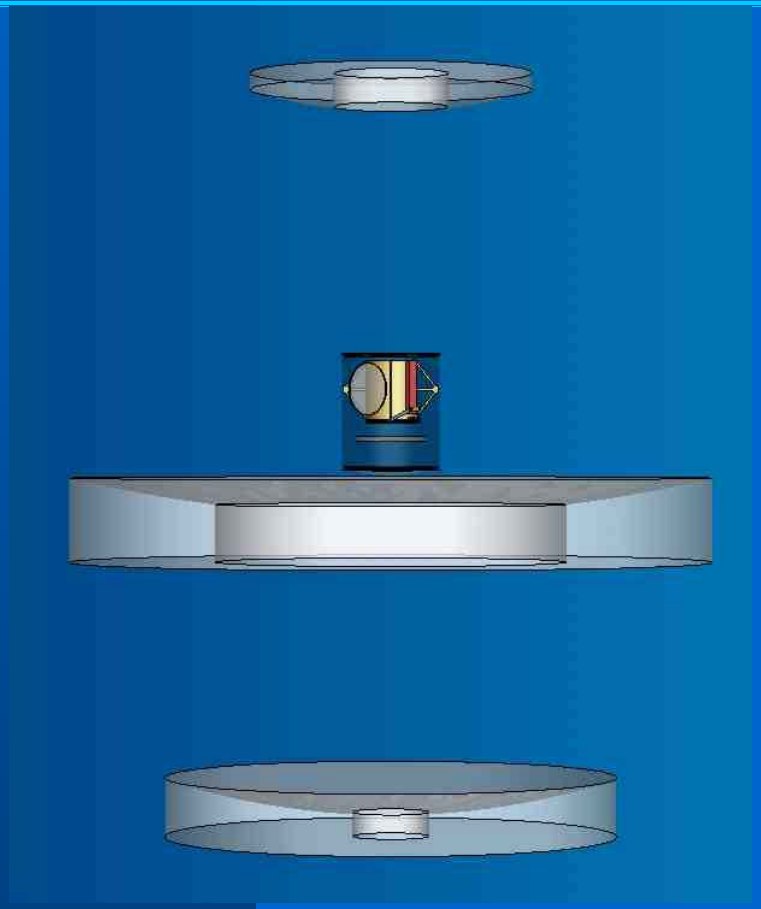

- Examine :
  - Performance
  - Cost (Component&System)
  - System Complexity
  - Power Consumption
  - Reliability
  - Risk

Instrument Design Fundamental Concepts: "Total Cost of Ownership"

- Purchase Costs
  - All components, hardware & software, cables, power supplies…
- Integration Costs
  - Packaging, cabling, software development, documentation development, physical size, weight, power and cooling requirements.
- Maintenance Costs
  - Manpower costs for calibration, troubleshooting, replacement time, documentation, organization overhead from lack of common systems.
- Replacement Cost
  - Cost of components, modularity, delivery times, control of technology
- Loss of Science Time
  - Loss of time due to inefficiency, overheads, down-time, reliability….

Instrument Concept

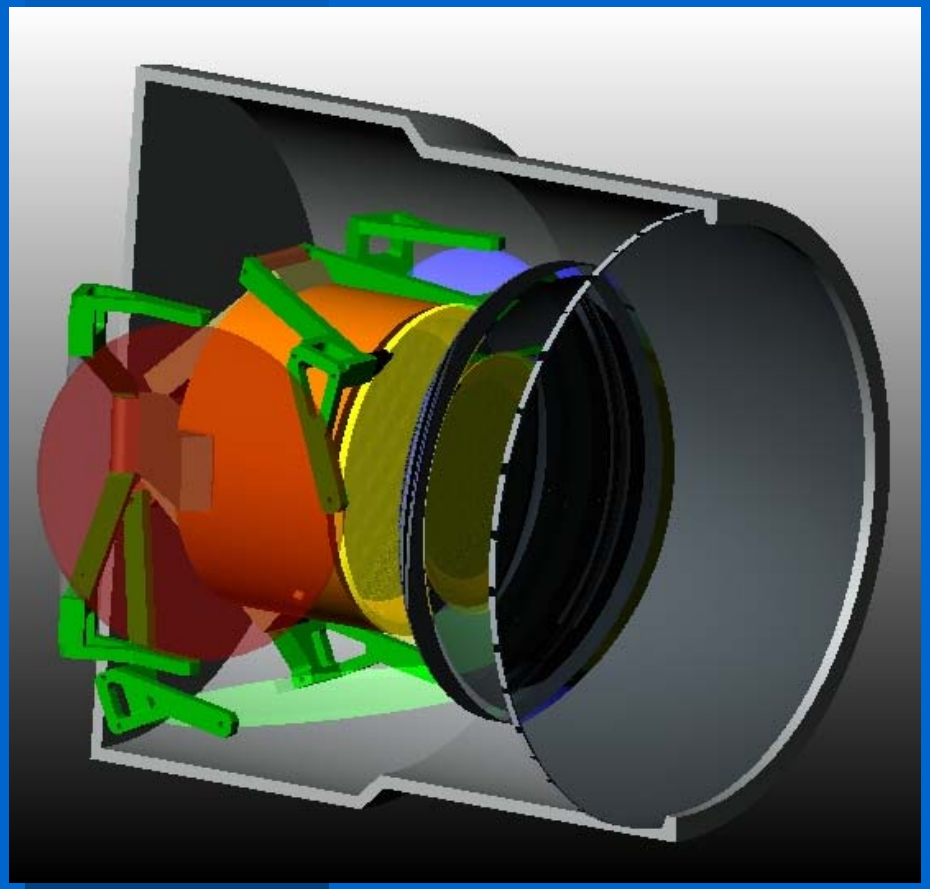

- Dewar within a dewar design
- Dewars "non-evacuated"
  - N_2 partial pressure in outer dewar
  - Xenon in inner dewar
- 3 refractive optical elements
- Outer dewar holds:
  - 2 optical elements (1.6m outer)
  - Acts as active lense support cell
  - Filter mechanism
  - Inner dewar assembly
- Inner dewar holds:
  - Window is 3rd refractive element
  - 2.3 G pixel focal plane assembly

Instrument Concept

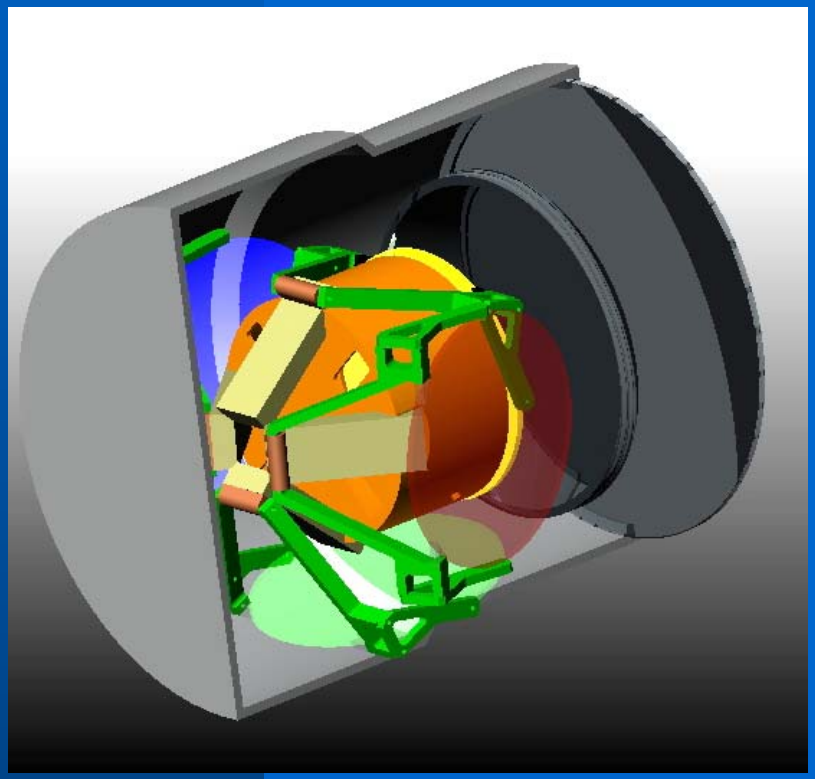

- Dewar within a dewar design
- Dewars "non-evacuated"
  - N_2 partial pressure in outer dewar
  - Xenon in inner dewar
- 3 refractive optical elements
- Outer dewar holds:
  - 2 optical elements (1.6m outer)
  - Acts as active lense support cell
  - Filter mechanism
  - Inner dewar assembly
- Inner dewar holds:
  - Window is 3rd refractive element
  - 2.3 G pixel focal plane assembly

Filter Mechanism

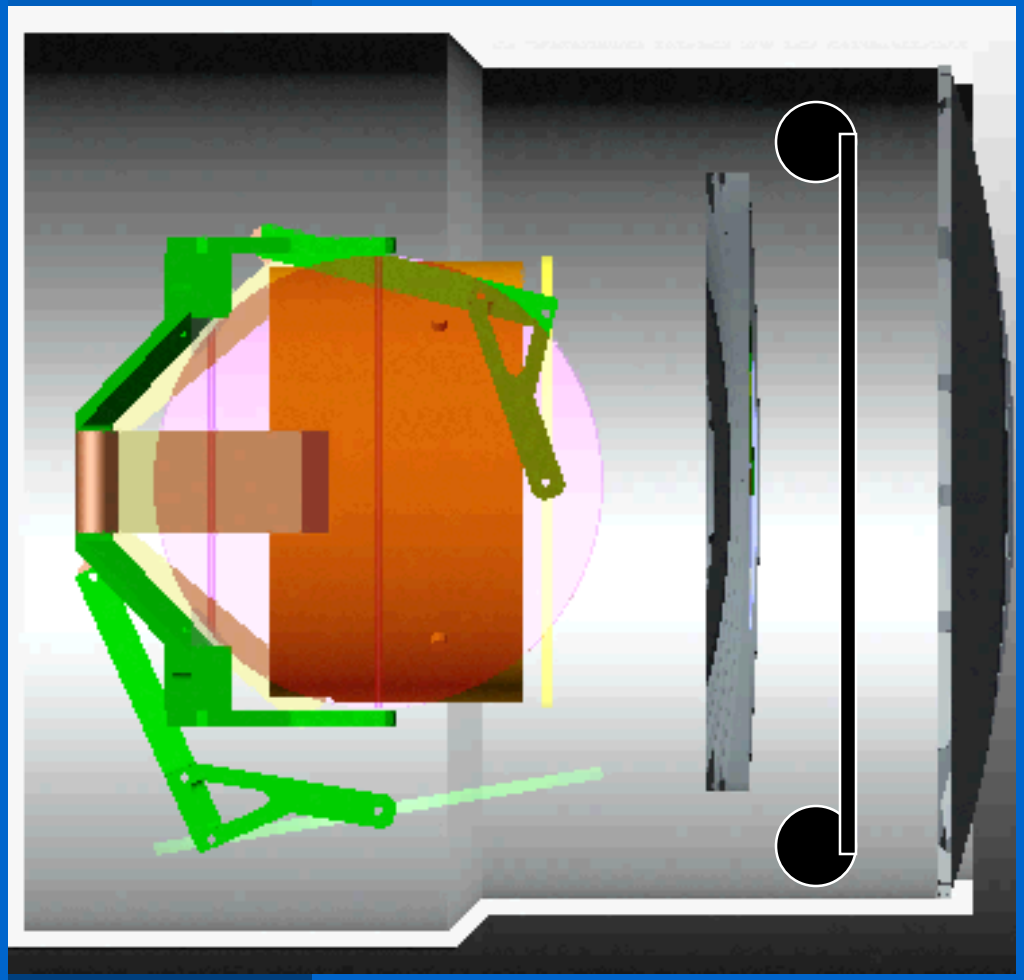

- "Flower petal" design
- Design driven by volume constraint
- Classic filter wheel or filter cassette not viable
- Compound movement
- Separate locking mechanism
- 4 Filters \
  - 60-cm diameter
  - ¾ to 1" thick
  - 40-50 lbs

Inner Dewar

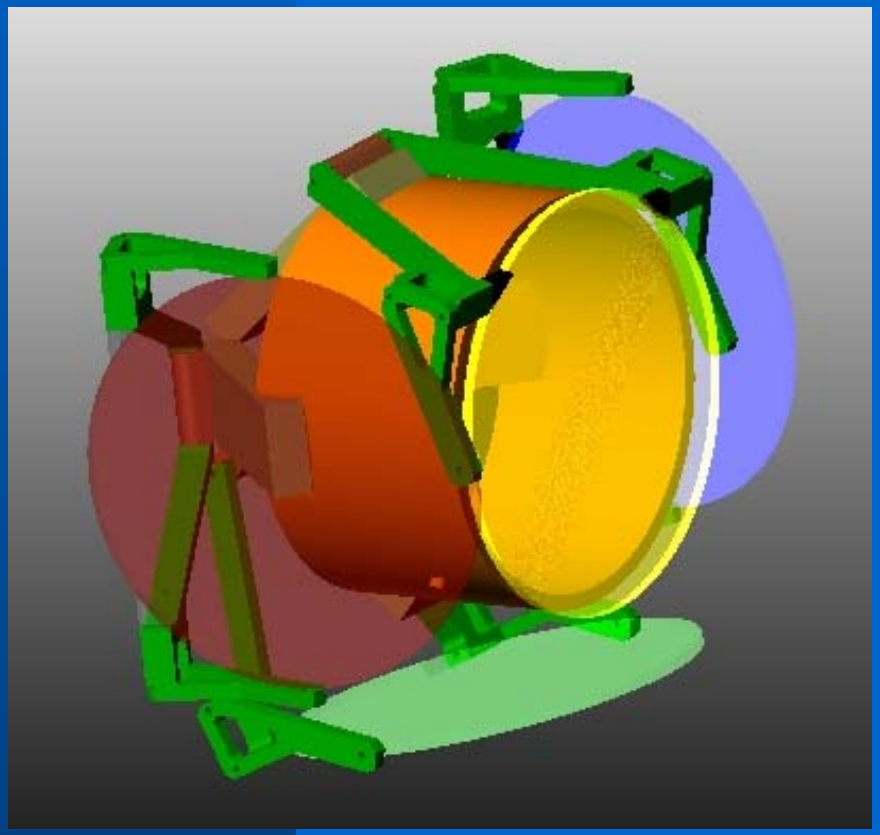

- 568 2k x 2k 10um devices
- Provide mechanical electrical and thermal interface to the focal plane
- Xenon filled dewar
- -20 C operation
- Flexcircuit electrical vacuum feedthru interconnects
- Fiberoptic interface to data acquisition computers

Inner Dewar

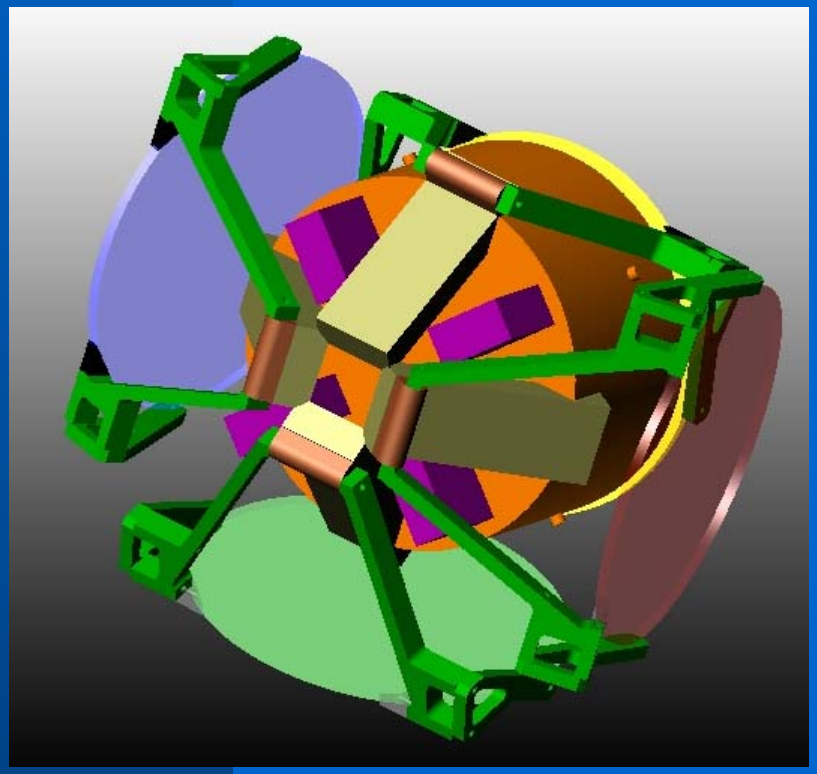

- 568 2k x 2k 10um devices
- Provide mechanical electrical and thermal interface to the focal plane
- Xenon filled dewar
- -20 C operation
- Flexcircuit electrical vacuum feedthru interconnects
- Fiberoptic interface to data acquisition computers

Inner Dewar

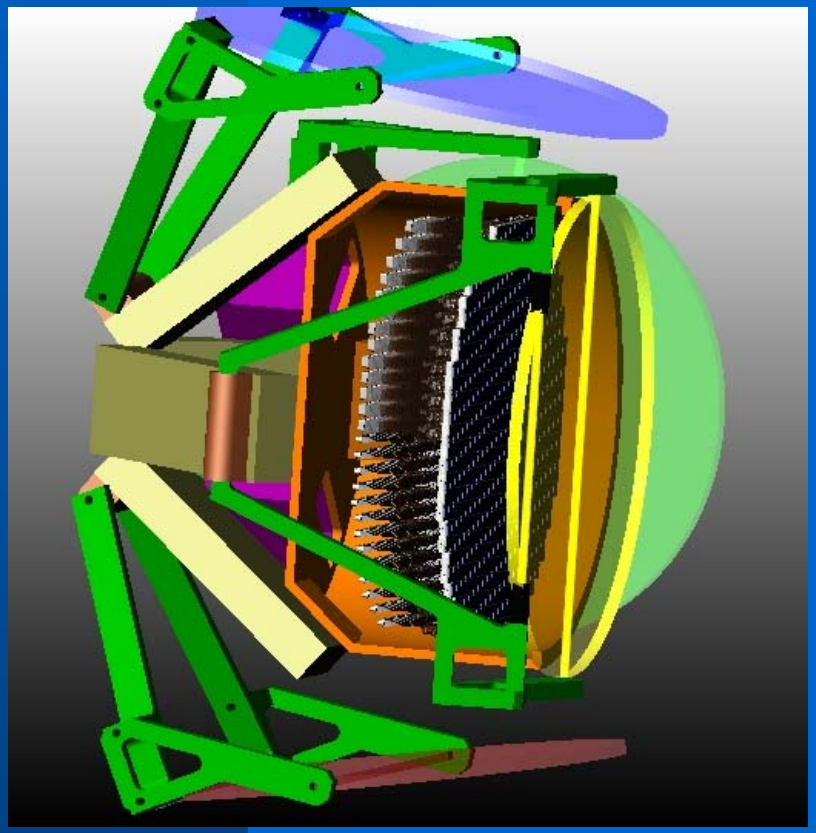

- 568 2k x 2k 10um devices
- Provide mechanical electrical and thermal interface to the focal plane
- Xenon filled dewar
- -20 C operation
- Flexcircuit electrical vacuum feedthru interconnects
- Fiberoptic interface to data acquisition computers

Inner Dewar

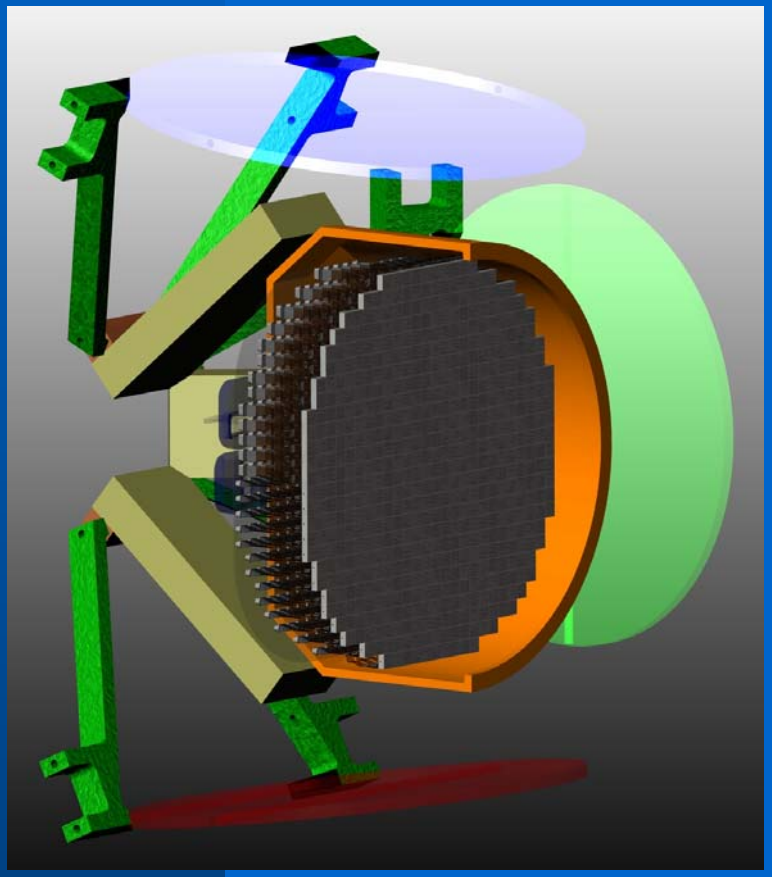

- 568 2k x 2k 10um devices
- Provide mechanical electrical and thermal interface to the focal plane
- Xenon filled dewar
- -20 C operation
- Flexcircuit electrical vacuum feedthru interconnects
- Fiberoptic interface to data acquisition computers

Inner Dewar

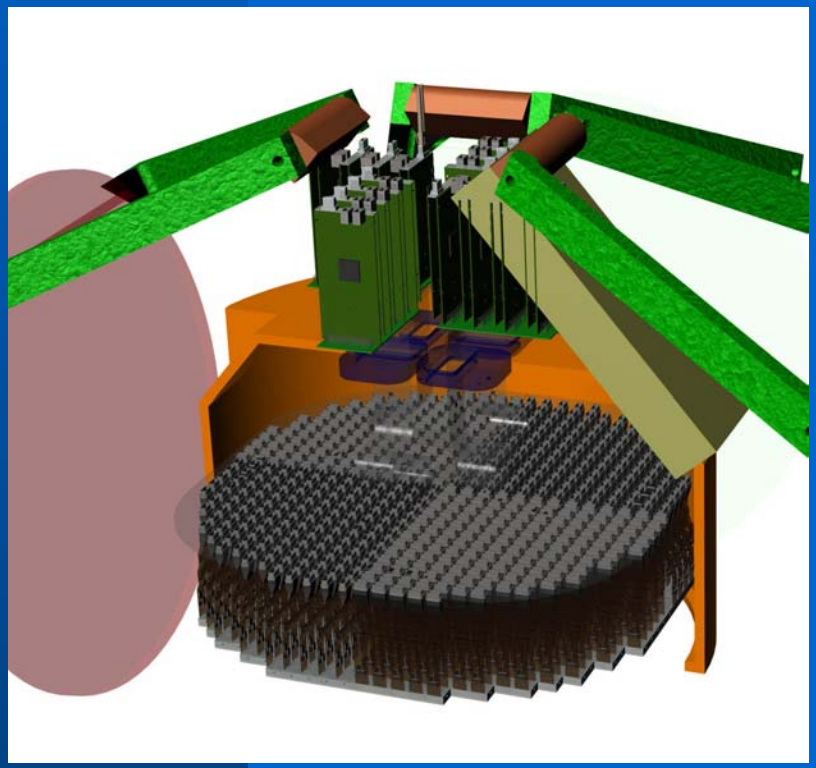

- 568 2k x 2k 10um devices
- Provide mechanical electrical and thermal interface to the focal plane
- Xenon filled dewar
- -20 C operation
- Flexcircuit electrical vacuum feedthru interconnects
- Fiberoptic interface to data acquisition computers

Atmospheric Force of LSST Window for Fully Evacuated Dewar

Hippo Weighs ~ 3 tons

6-7 Tons

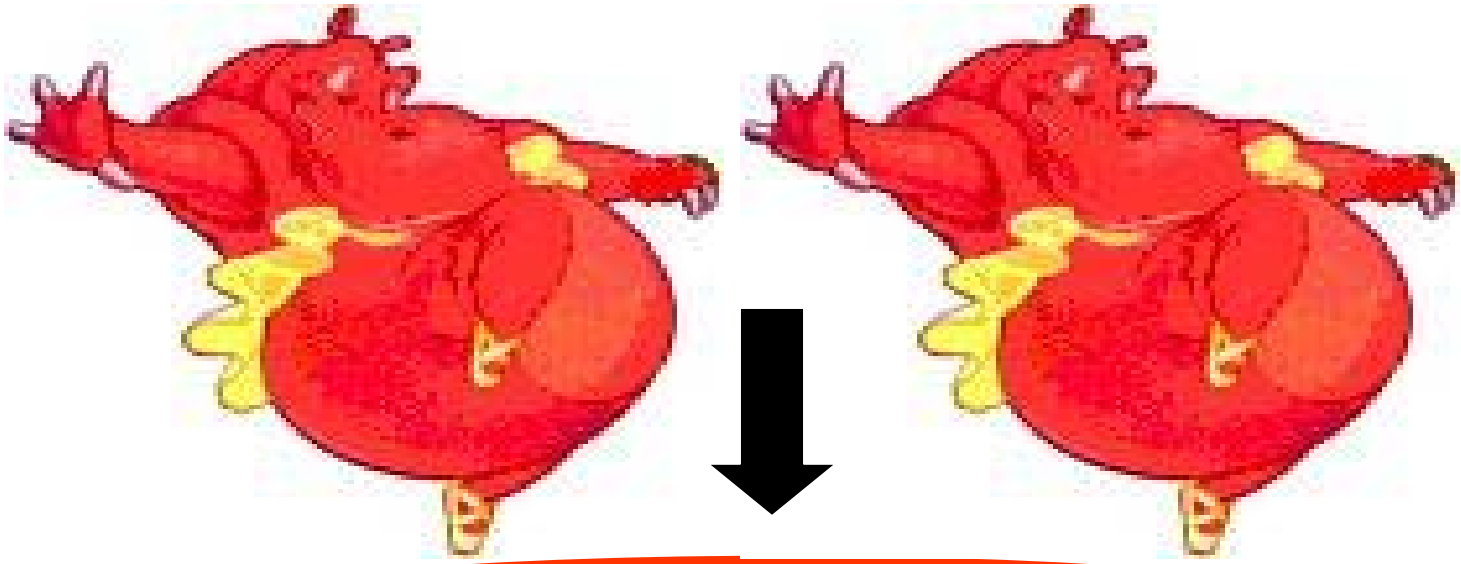

60 cm Dewar Window

Mosaic Physical Format Issues

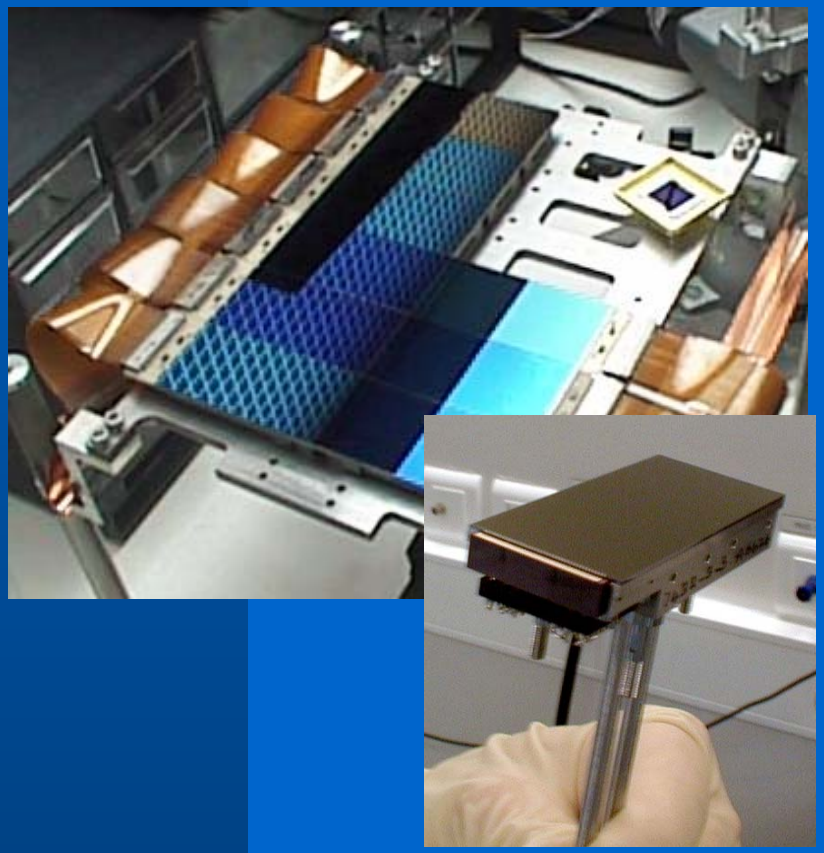

- Focal Plane Metrology
  - Fit to focal surface (+/- 5um)
  - > 90% fill-factor
  - 4-side-Buttable Packaging
    - 100um gaps???
- Optical Baffling
  - Bond wires!!!!!
  - No Shiny Bits!!!
- Electrical Interconnect
- Thermal Control
  - “Warm” Focal Plane
    - Cooling to about –20C

Z Module Technology

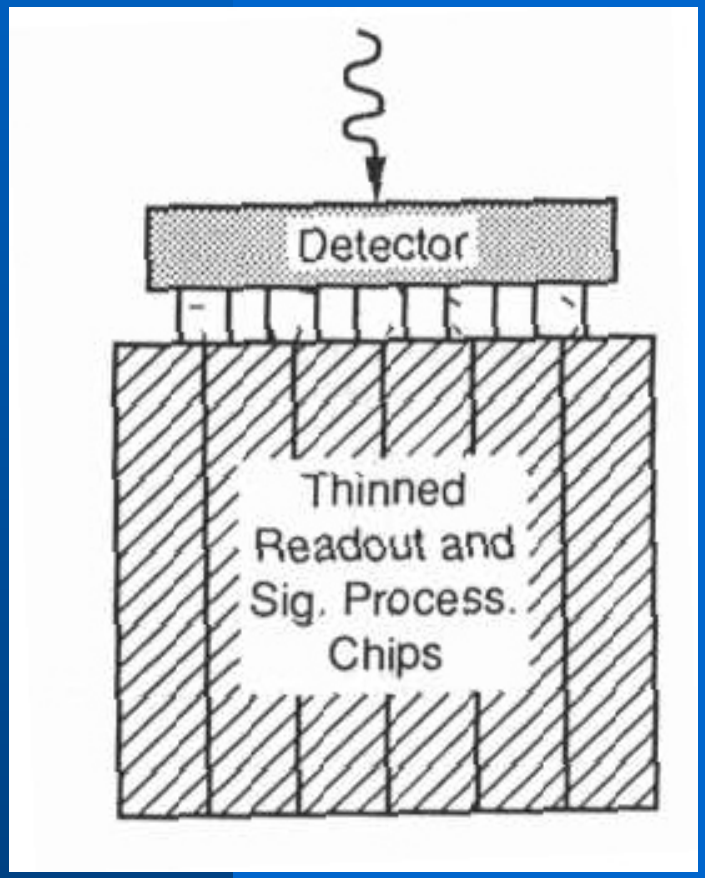

- Detector interface circuitry contained within footprint of detector

Z Module Technology

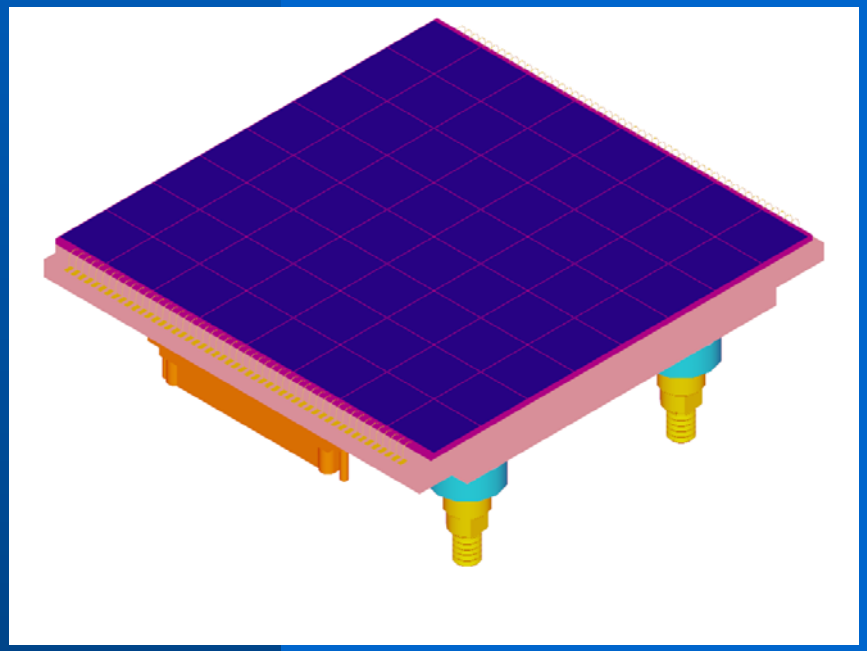

- Detector interface circuitry contained within footprint of detector
- ASIC solution ideal but has risk and high NRE associated with it

Z Module Technology

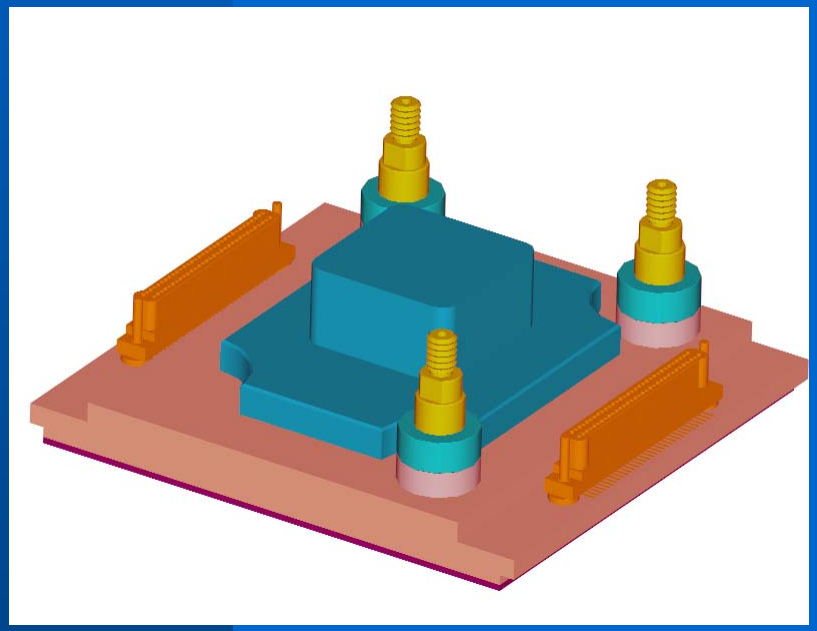

- Detector interface circuitry contained within footprint of detector
- ASIC solution ideal but has risk and high NRE associated with it

Z Module Technology

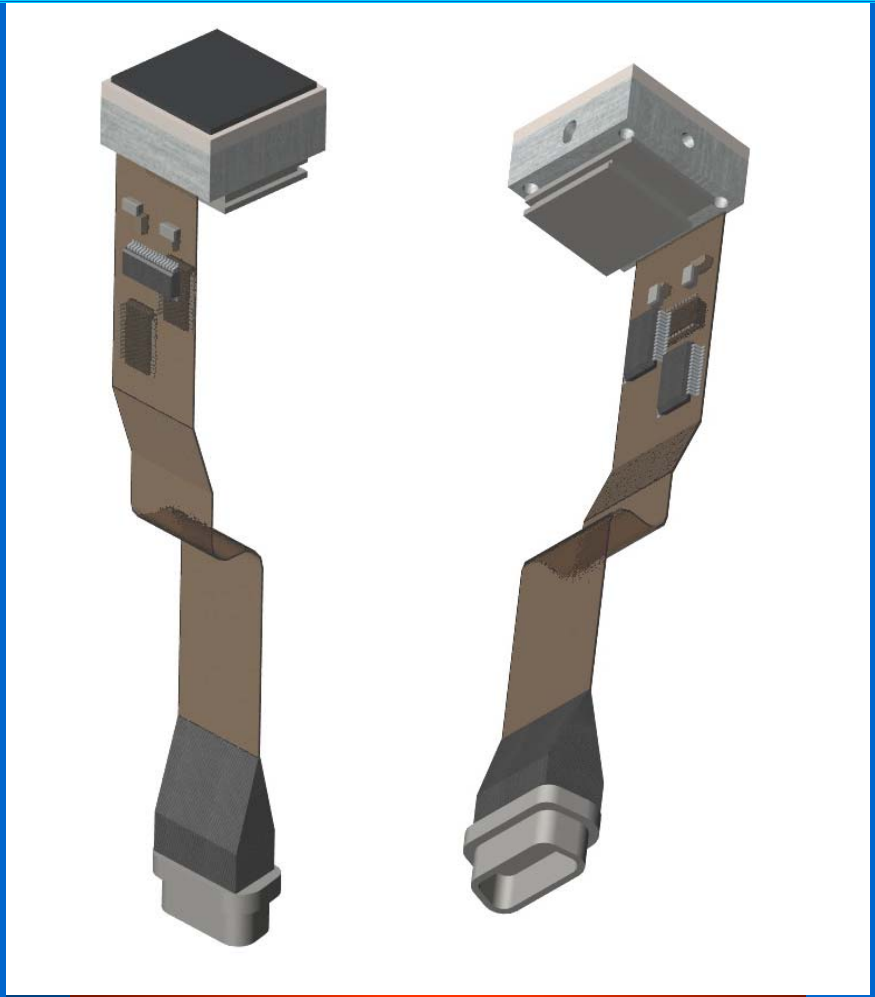

- Detector interface circuitry contained within footprint of detector
- ASIC solution ideal but has risk and high NRE associated with it
- Standard component solution exists now and provides ASIC backup

ASIC Approach… Standard Components…We've Got Options

- SDSU II Dual Channel Video Board
  - 2 channels
  - 1 Mpixel/sec
  - CDS, 16 bit ADC
  - 15 W power

- Analog Devices 9826
  - 3 channels (RGB)
  - 15 Mpixel/sec
  - CDS, 16 bit ADC
  - 400 mW power

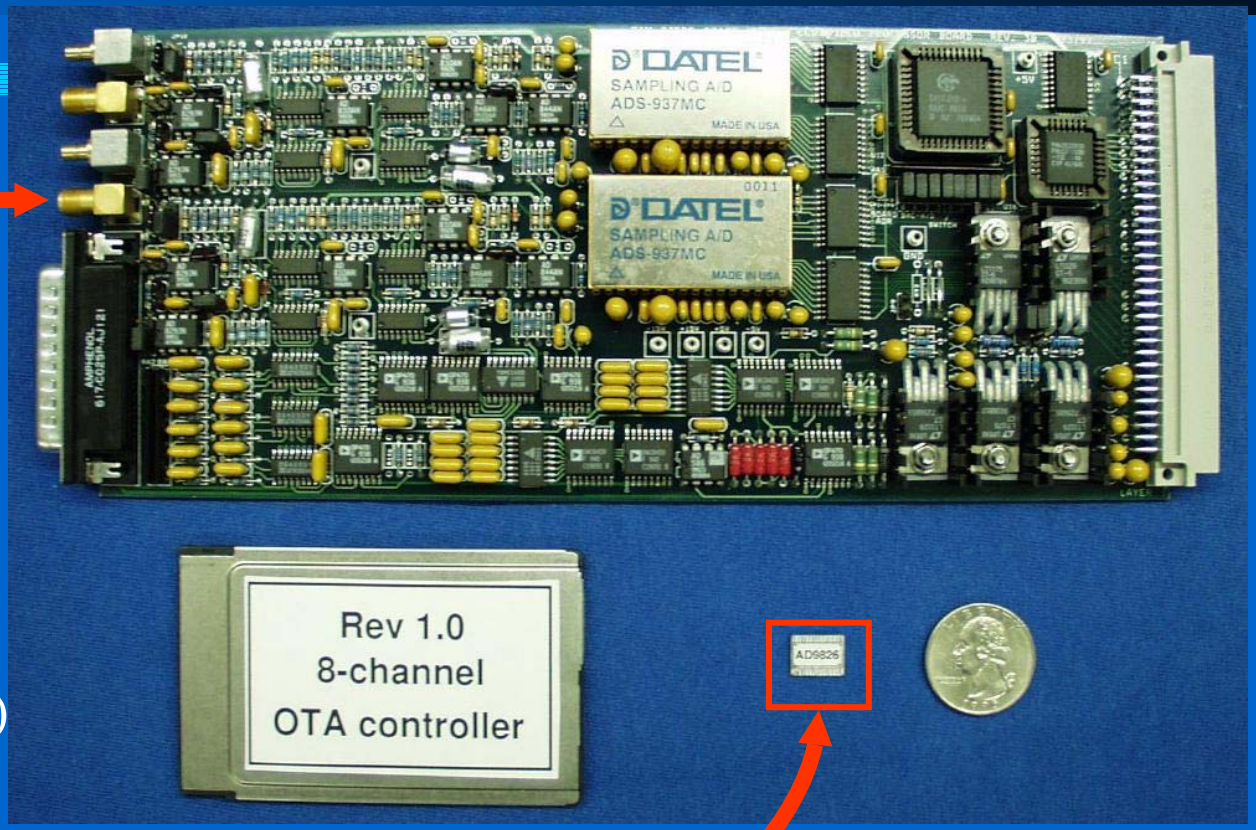

ASIC Approach… Standard Components…We've Got Options

- SDSU II Dual Channel Video Board
  -
  -
  -
  -
- A

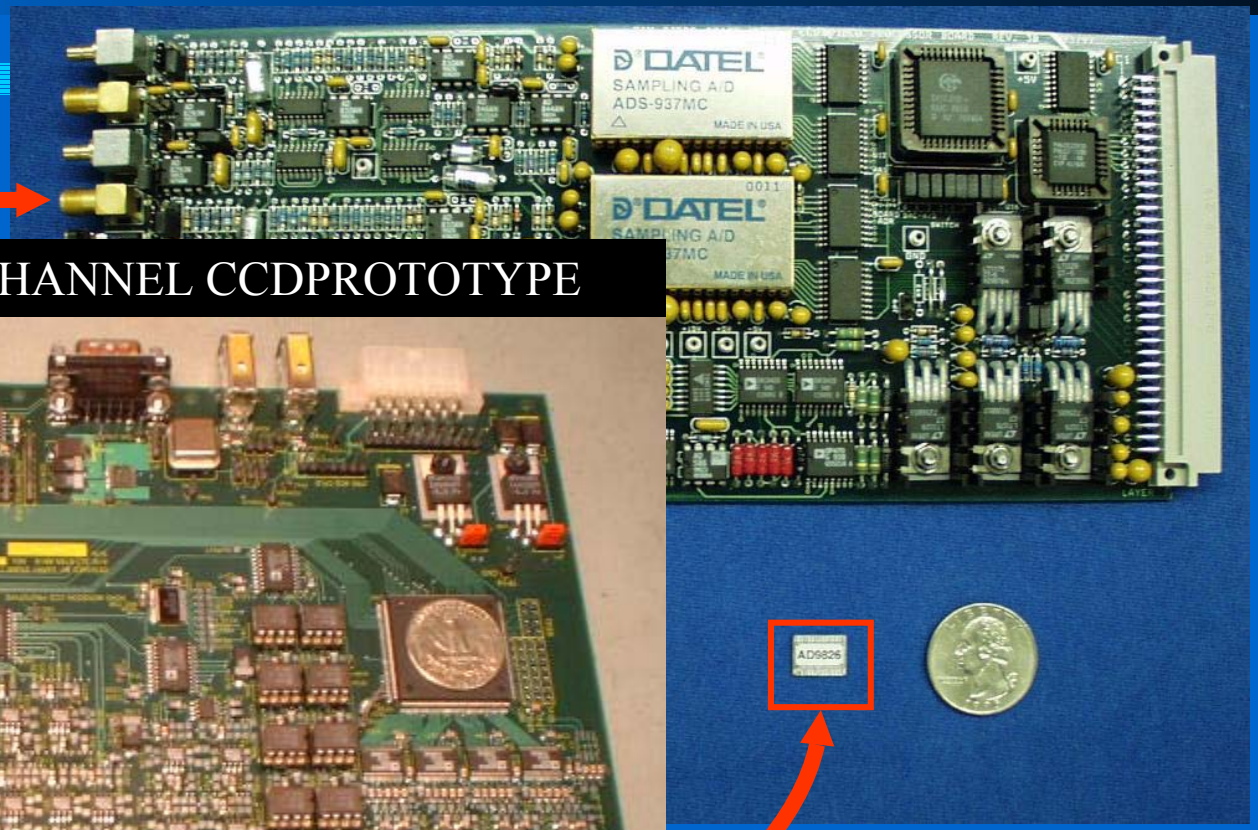

MONSOON 12-CHANNEL CCDPROTOTYPE

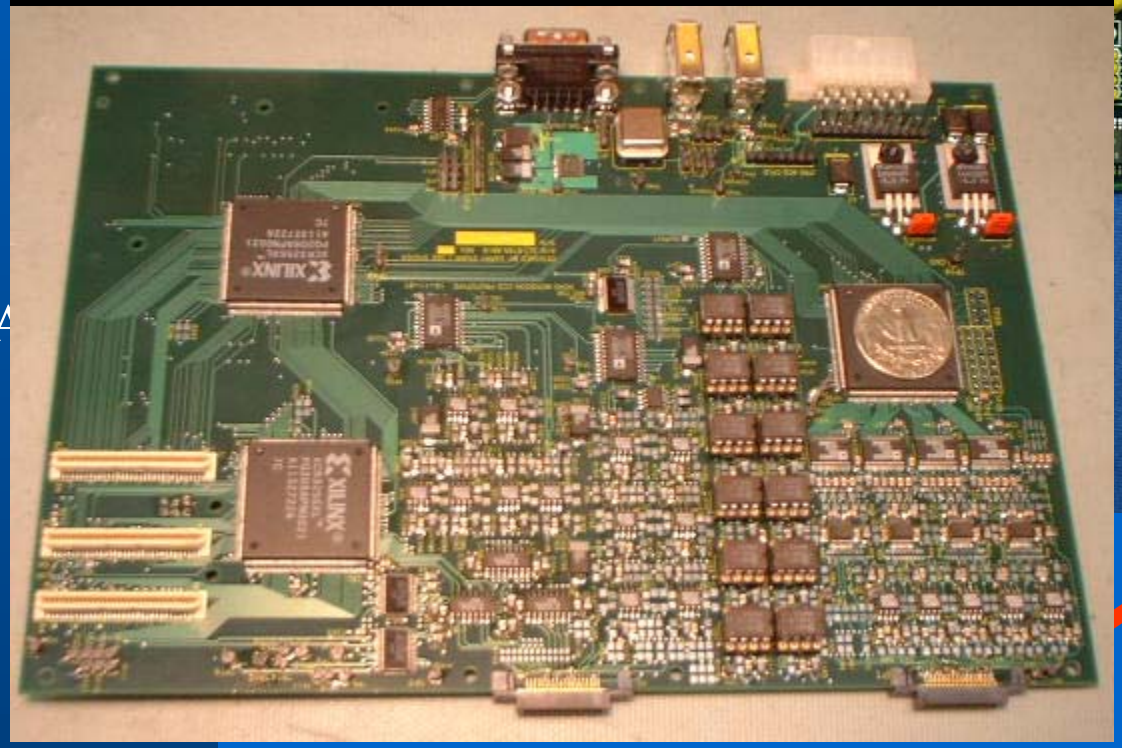

Focal Plane Interface

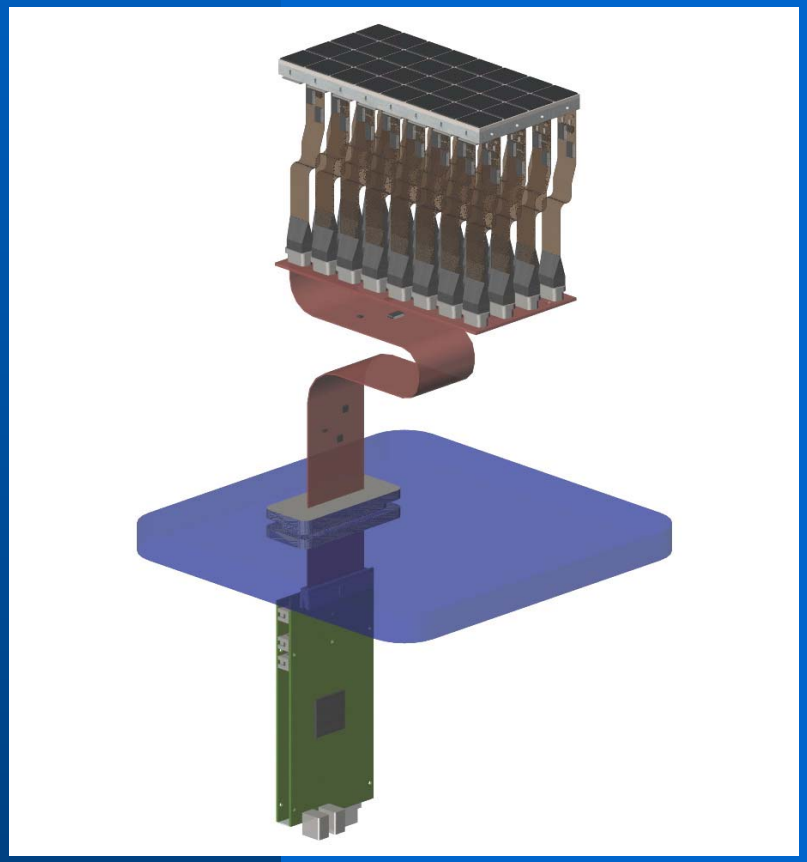

- Need for efficient electrical interface
- Focal plane organized in segments
- Flexible circuit interconnects and vacuum feedthroughs
- Efficient serial LVDS interface
- All detector interface immediate to detector

Focal Plane Interface

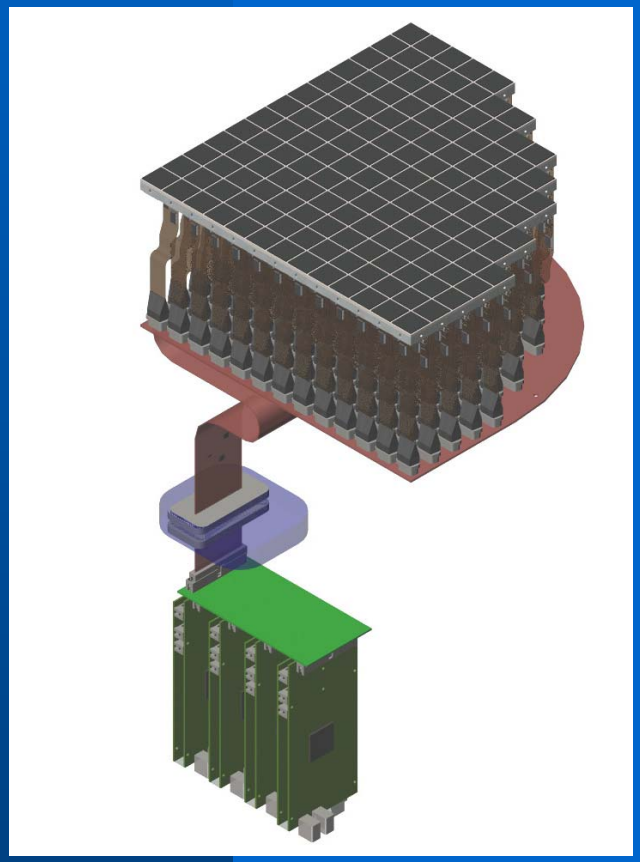

- Need for efficient electrical interface
- Focal plane organized in segments
- Flexible circuit interconnects and vacuum feedthroughs
- Efficient serial LVDS interface
- All detector interface immediate to detector

Focal Plane Interface

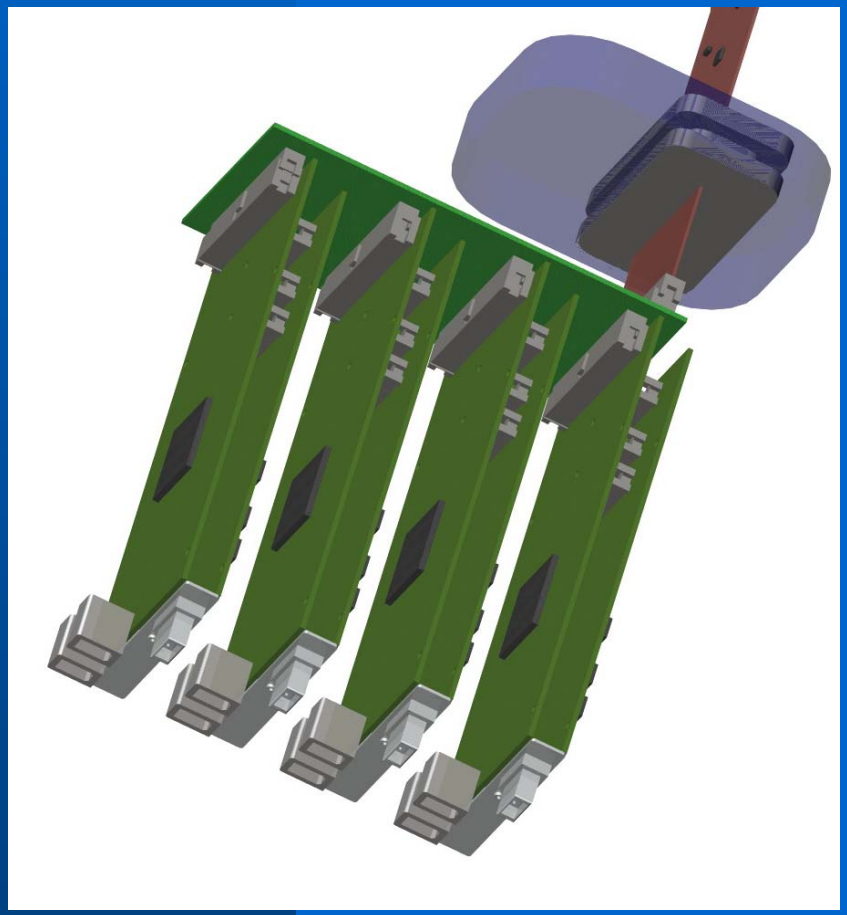

- Need for efficient electrical interface
- Focal plane organized in segments
- Flexible circuit interconnects and vacuum feedthroughs
- Efficient serial LVDS interface
- All detector interface immediate to detector

Focal Plane Interface

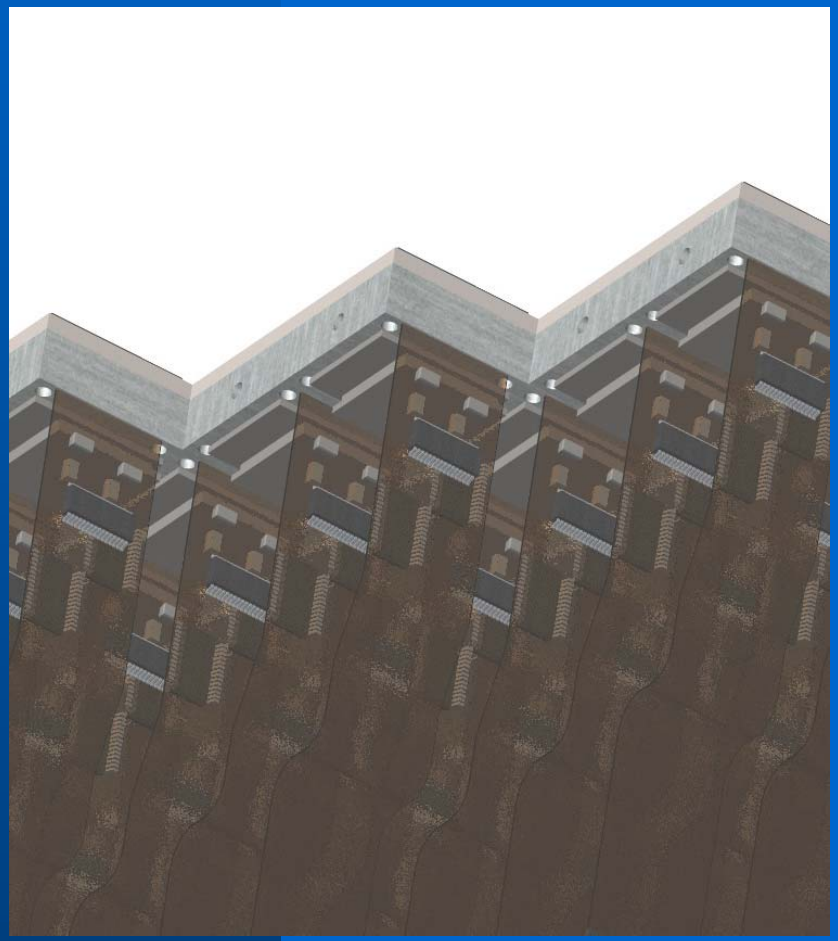

- Need for efficient electrical interface
- Focal plane organized in segments
- Flexible circuit interconnects and vacuum feedthroughs
- Efficient serial LVDS interface
- All detector interface immediate to detector

Focal Plane Interface

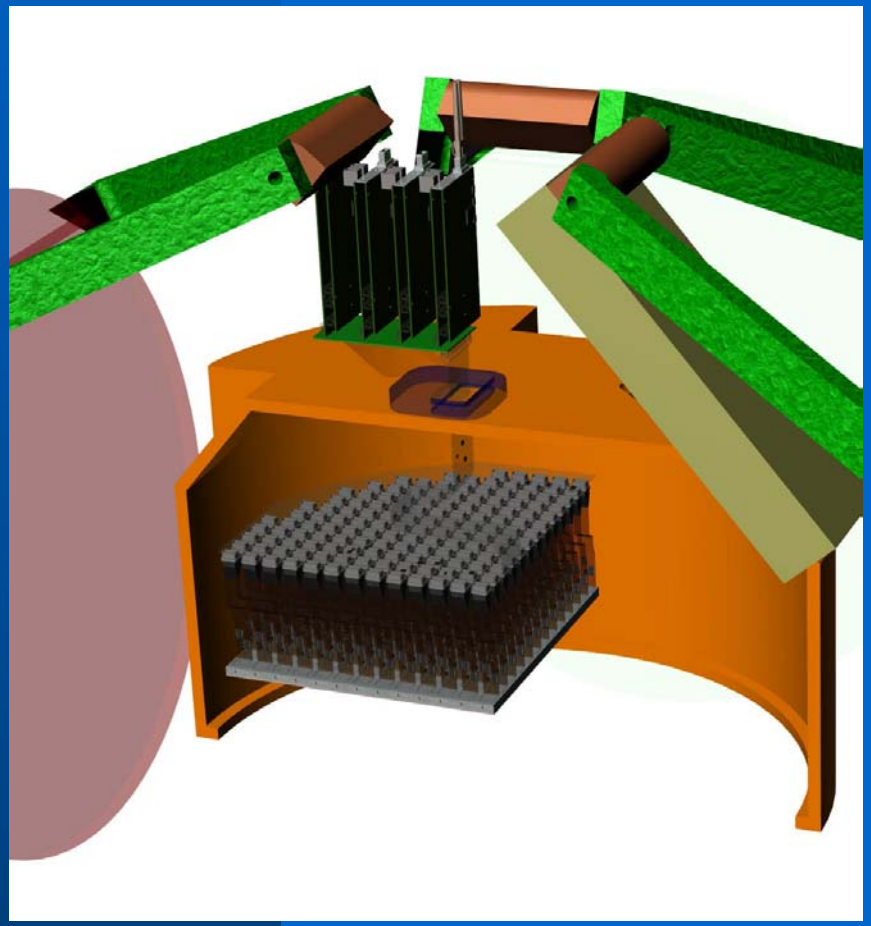

- Need for efficient electrical interface
- Focal plane organized in segments
- Flexible circuit interconnects and vacuum feedthroughs
- Efficient serial LVDS interface
- All detector interface immediate to detector

Focal Plane Interface

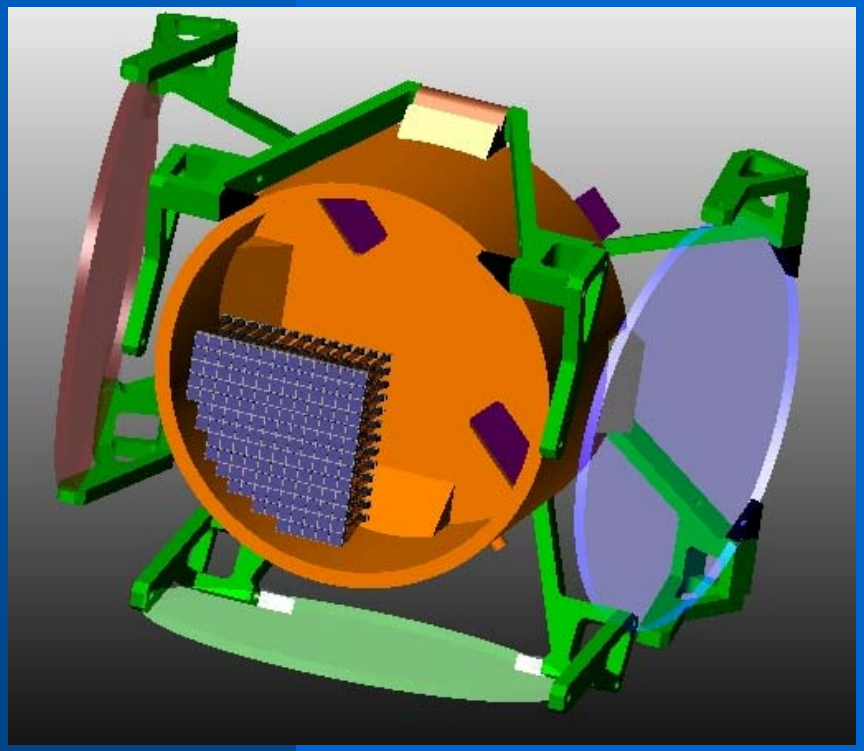

- Need for efficient electrical interface
- Focal plane organized in segments
- Flexible circuit interconnects and vacuum feedthroughs
- Efficient serial LVDS interface
- All detector interface immediate to detector

Key Visible Detector Technologies

1. "Classic" Back-Illuminated Science Grade CCDs
2. "Hi-Resistivity" CCDs ("Red Hot")
3. CMOS "Active Pixel Sensors" (APS) Sensors
4. Hybrid FPA Solutions
5. Orthogonal Transfer Arrays (OTAs)

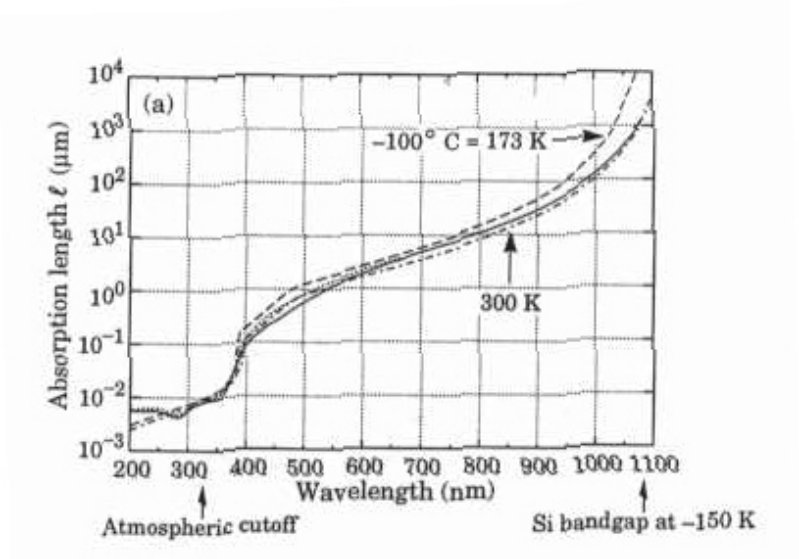

Graph Courtesy of Don Groom SPIE 4008-70

Focal Plane Metrology Issue

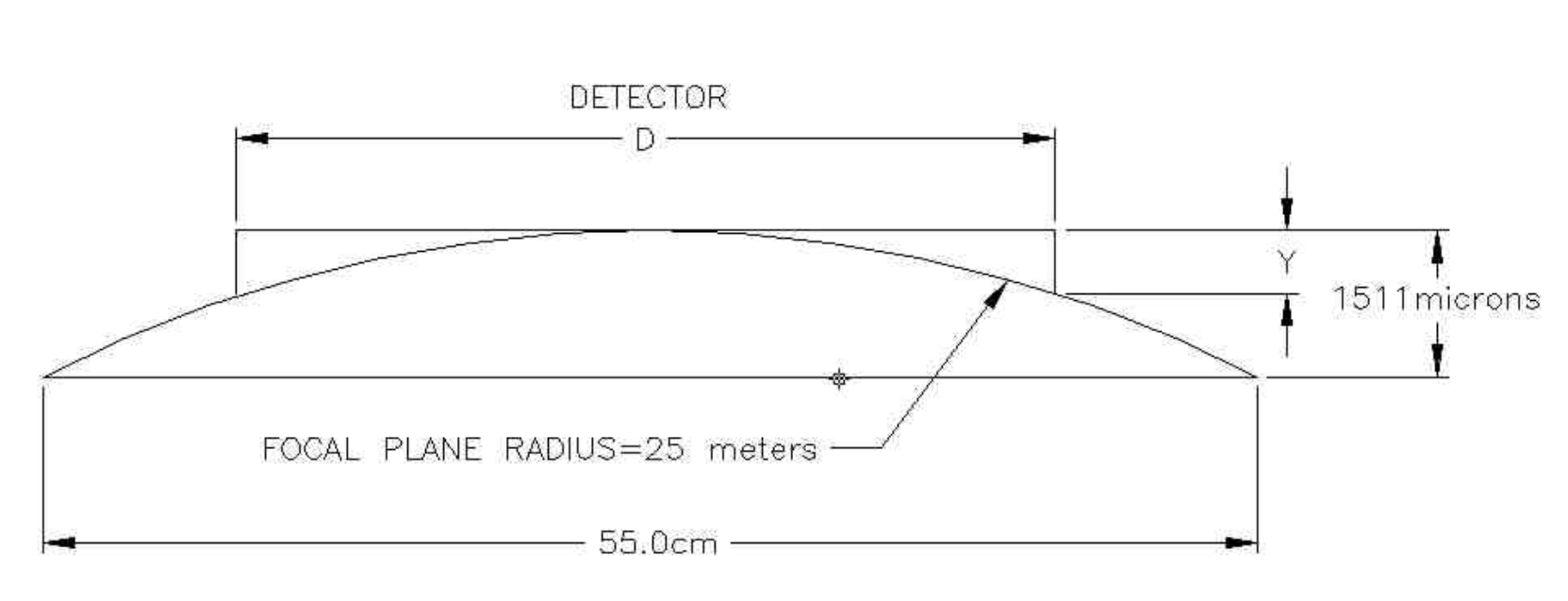

- "Focal plane" is actually "focal surface"
- 25-30 m radius of curvature
- Size limit to mosaic "flat devices" of curved surface
- +/- 5 micron desired depth of focus.

Focal Plane Assembly

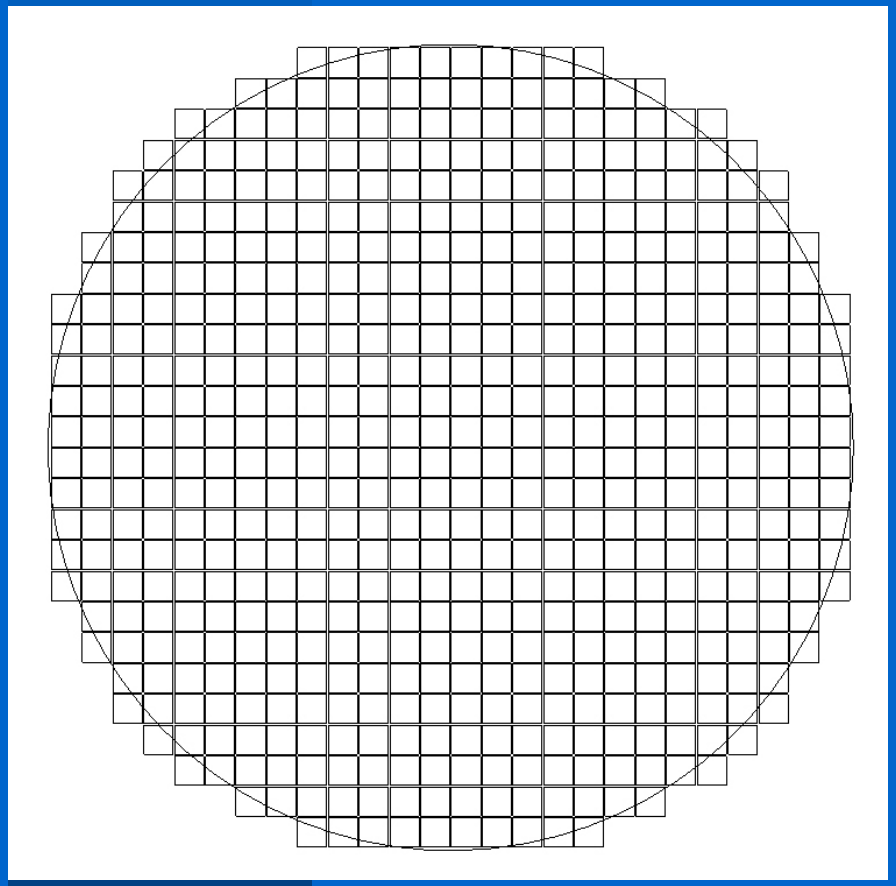

- 568 2k x 2k devices
- 3.8 um deviation from 25m radius focal surface for perfect 2k x 2k detector
- 4 edge buttable devices
- > 90% fill factor

Focal Plane Assembly

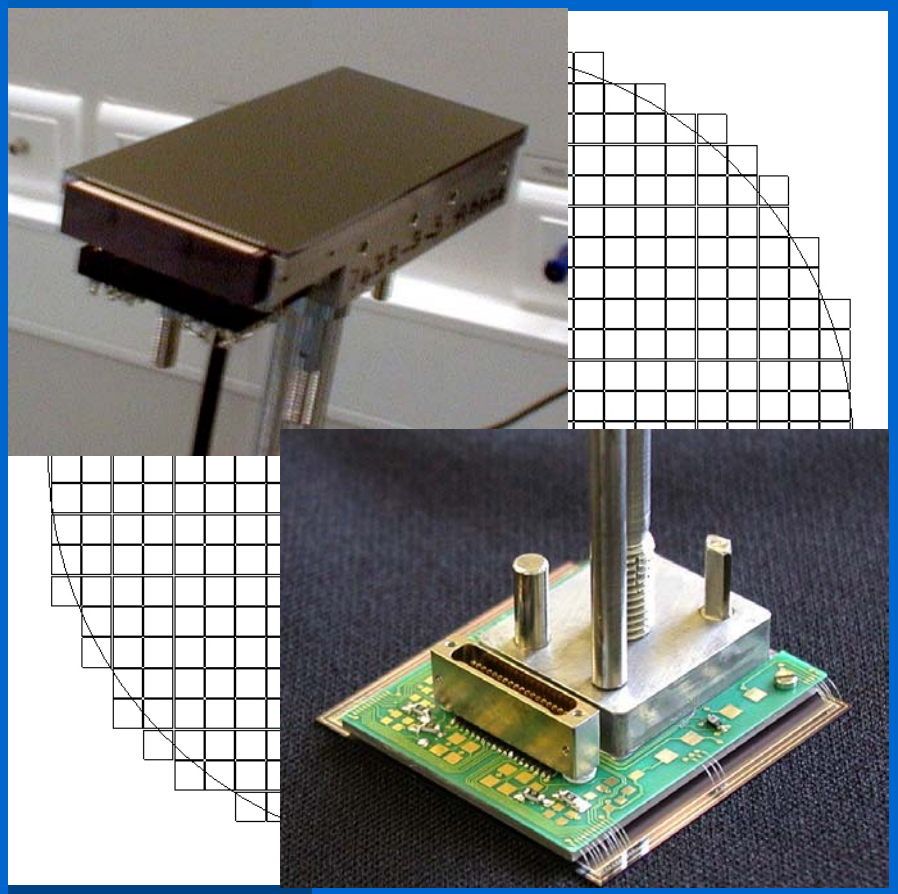

- 568 2k x 2k devices
- 3.8 um deviation from 25m radius focal surface for perfect 2k x 2k detector
- 4 edge buttable devices
- > 90% fill factor

MONSOON Image Acquisition System

- Scalable multi-channel high-speed Image Acquisition System
- Scalable at all levels based on cost/performance trade-offs
- Specifically designed to address the needs of next-generation IR & CCD mosaic systems
  - ORION (2k x 2k) InSb & HgCdTe development
  - NEWFIRM (4k x 4k)
  - WYIN QUOTA (8k x 8k) => ODI (32k x 32k)
  - LSST (47k x 47k) and growing….
- Increased performance over existing solutions
  - With reduced total cost
  - With reduced size
  - With reduced power consumption

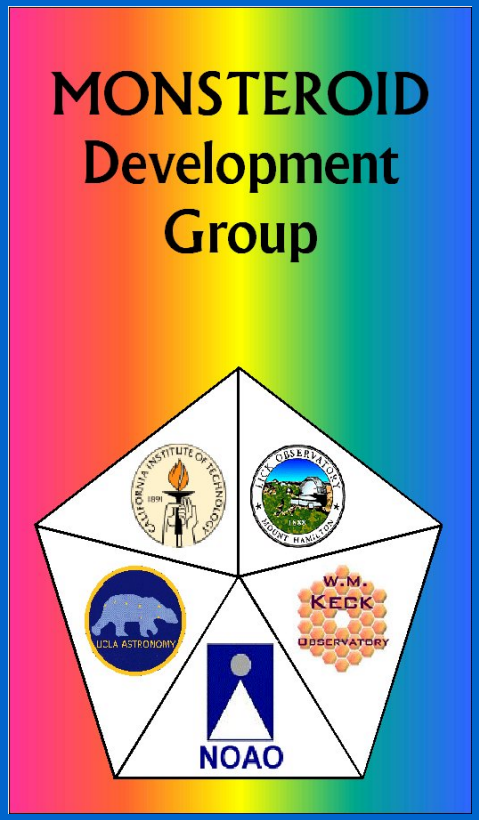

MONSOON Fundamental Concepts: "Image Server"or "Pixel Server"

- Integrated Systems Concept:
  - Image Acquisition System vs. "Controller"
  - Key element in "LSST Observatory" system
  - More than "Interface Electronics"
  - Focus on all key issues:
    - Signal acquisition
    - Data flow
    - Processing
    - System management
  - Remote location / reliability is of vital importance

MONSOON Scalable Architecture

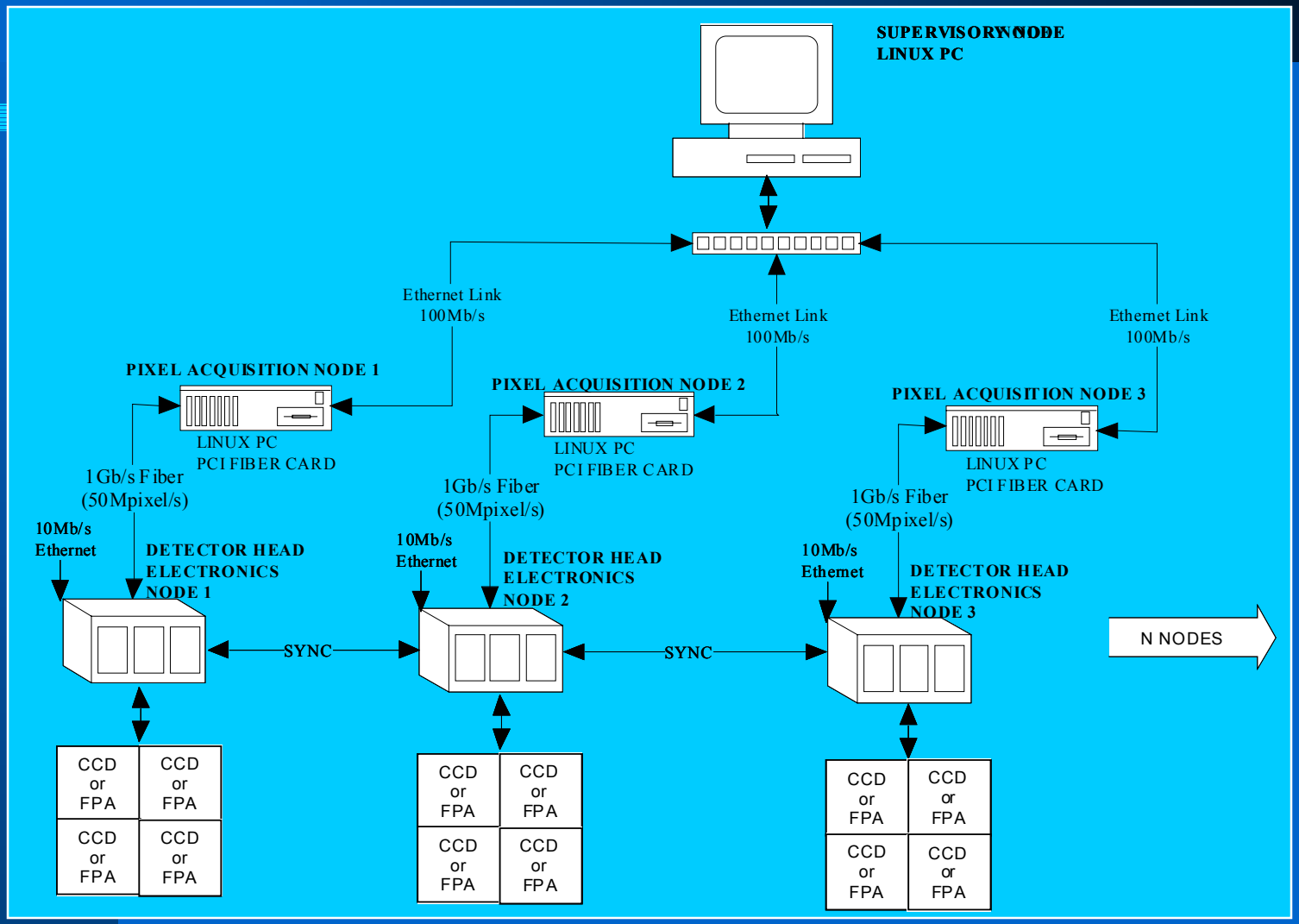

3 Layer System Architecture

- Supervisor Layer
  - Provide single point contact to system
  - Control only, not pixel data
  - Provides client access security
- Pixel Acquisition Node (PAN) Layer
  - All low-level data processing (except digital averaging)
  - No knowledge of other PAN-DHE pairs
  - Single exposure sequencing
    (Fowler Sampling, coadds, MSR techniques, OT imaging)
- Detector Head Electronics (DHE) Layer
  - Integration timing (if master)
  - Detector readout sequencing & digital avgs.
  - Shutter control & array temperature control

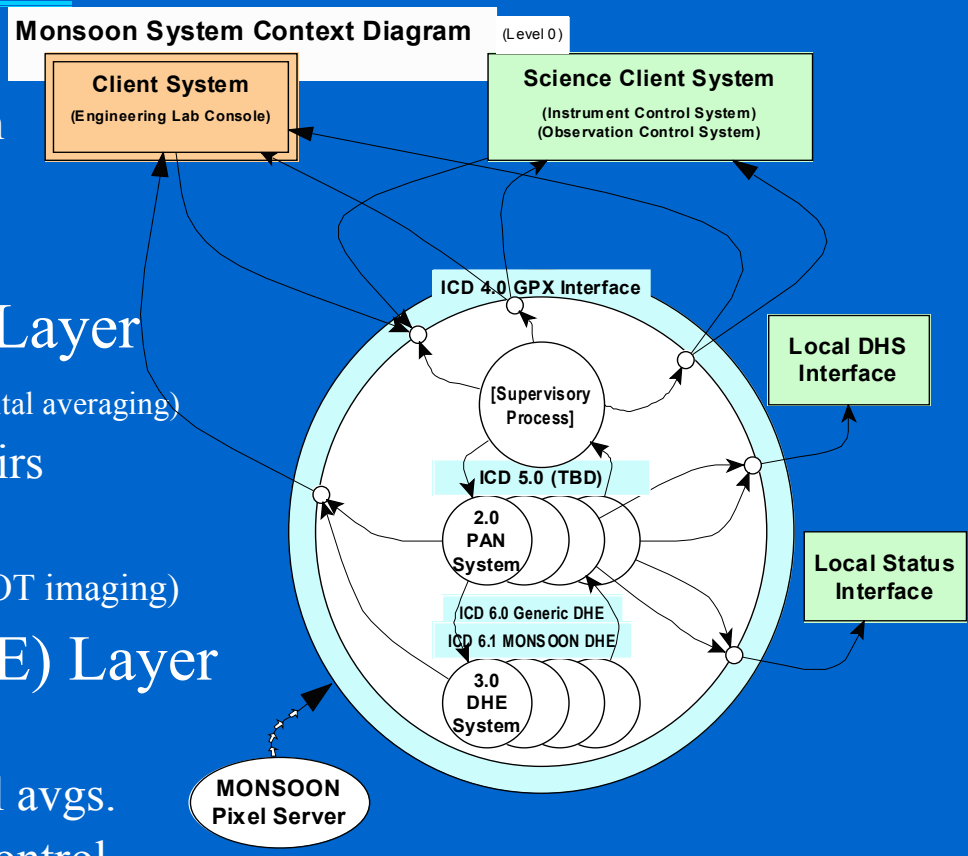

MONSOON System Data Performance Metrics

- All data pipelines 32-bit for future expansion
- Data rates: Up to 120Mpixel/sec per fiber link
- Data processing rates: “scalable” (w/Fiber broadcast)
- Data storage rates: “scalable” (w/Fiber broadcast)
- Data display rates: “scalable” (w/Fiber broadcast)
- # of Channels/DHE:
    - Up to 216 ch per DHE chassis (w/out Bridge, 8 Slot backplane)
    - Up to 532 ch per DHE chassis (w/Bridge, 16 Slot backplane)
- # of Controllers/System: >100

Visible MOSAIC Development Path

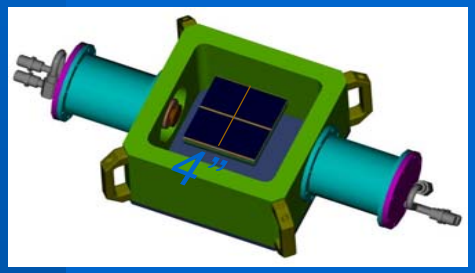

1) QUOTA: 8K x 8K

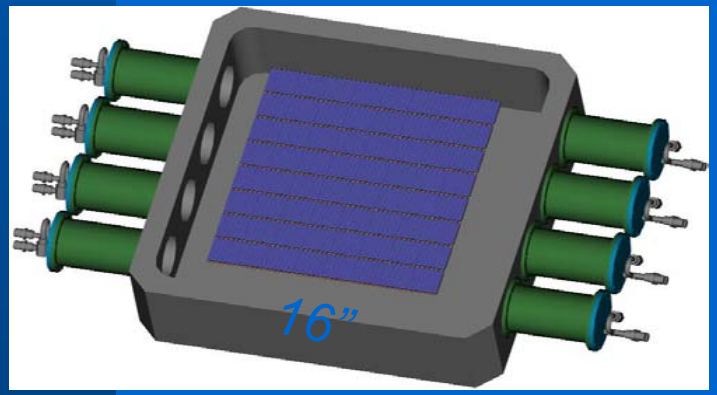

2) ODI: 32K x 32K

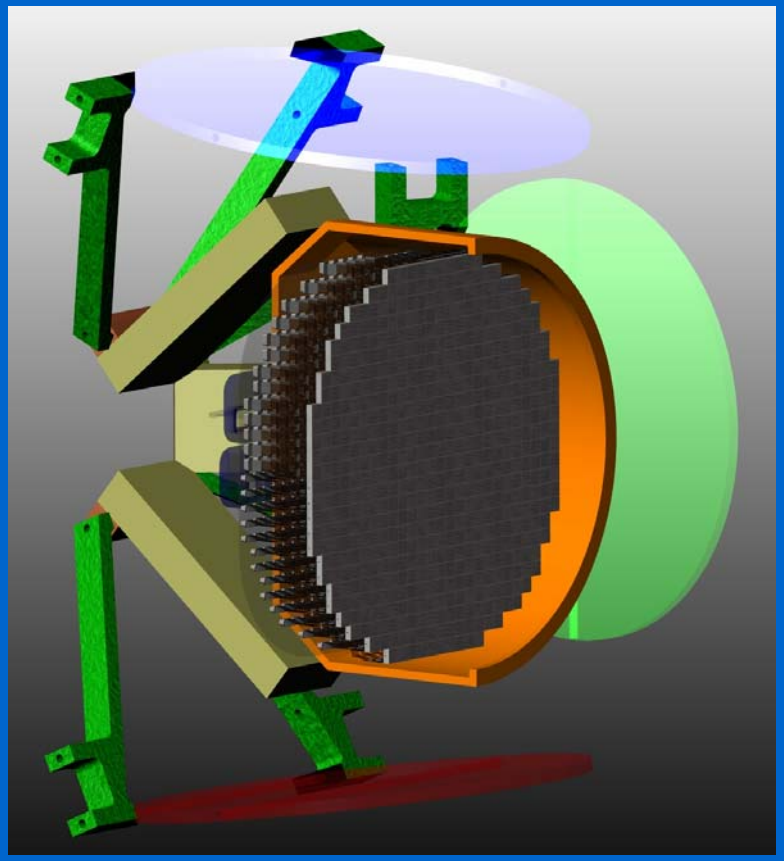

3) LSST: 47K x 47K

QUOTA to ODI to LSST System Scaling

QUOTA : 1 NODE

ODI : 8 NODES

(2.4 Gb/s Fibers)

LSST: 12 NODES

(2.4 Gb/s Fibers)

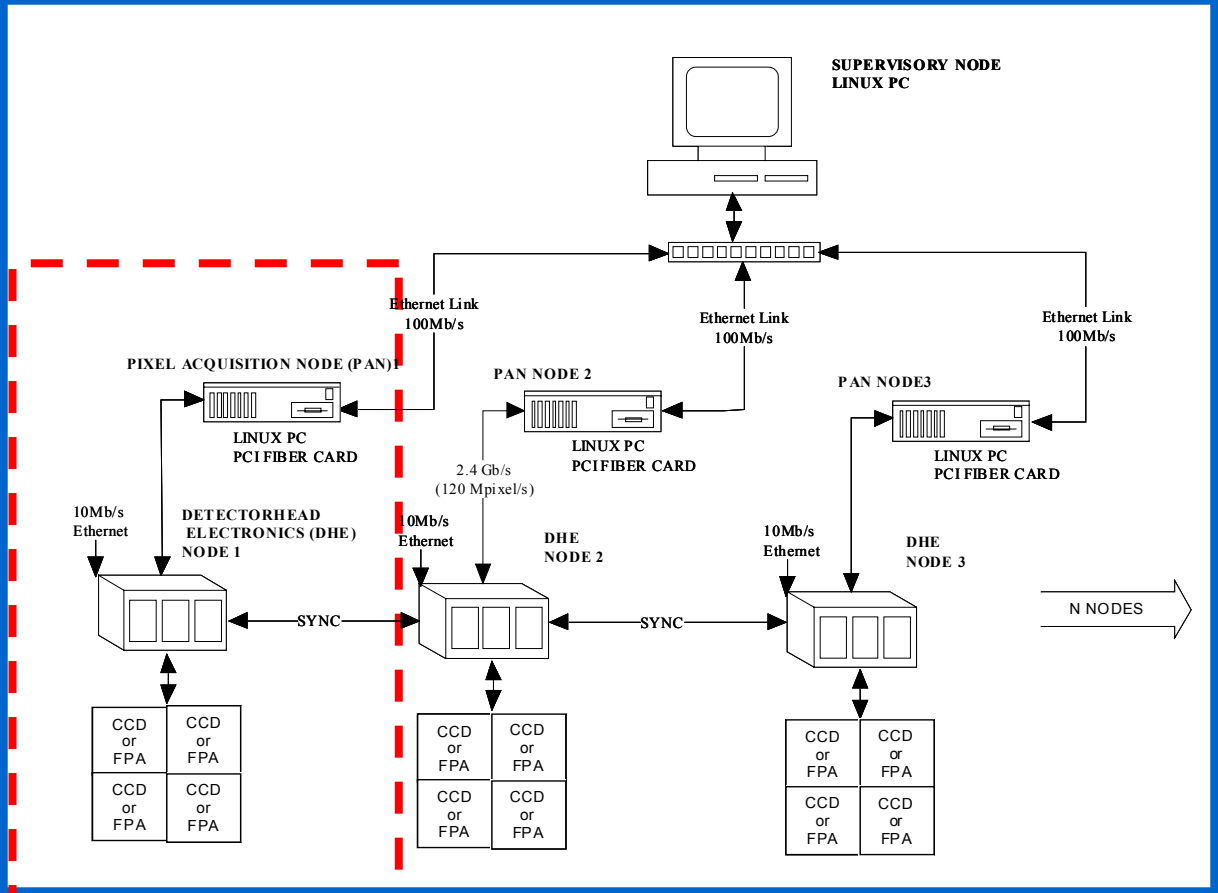

System Design Allows Immediate Software Development

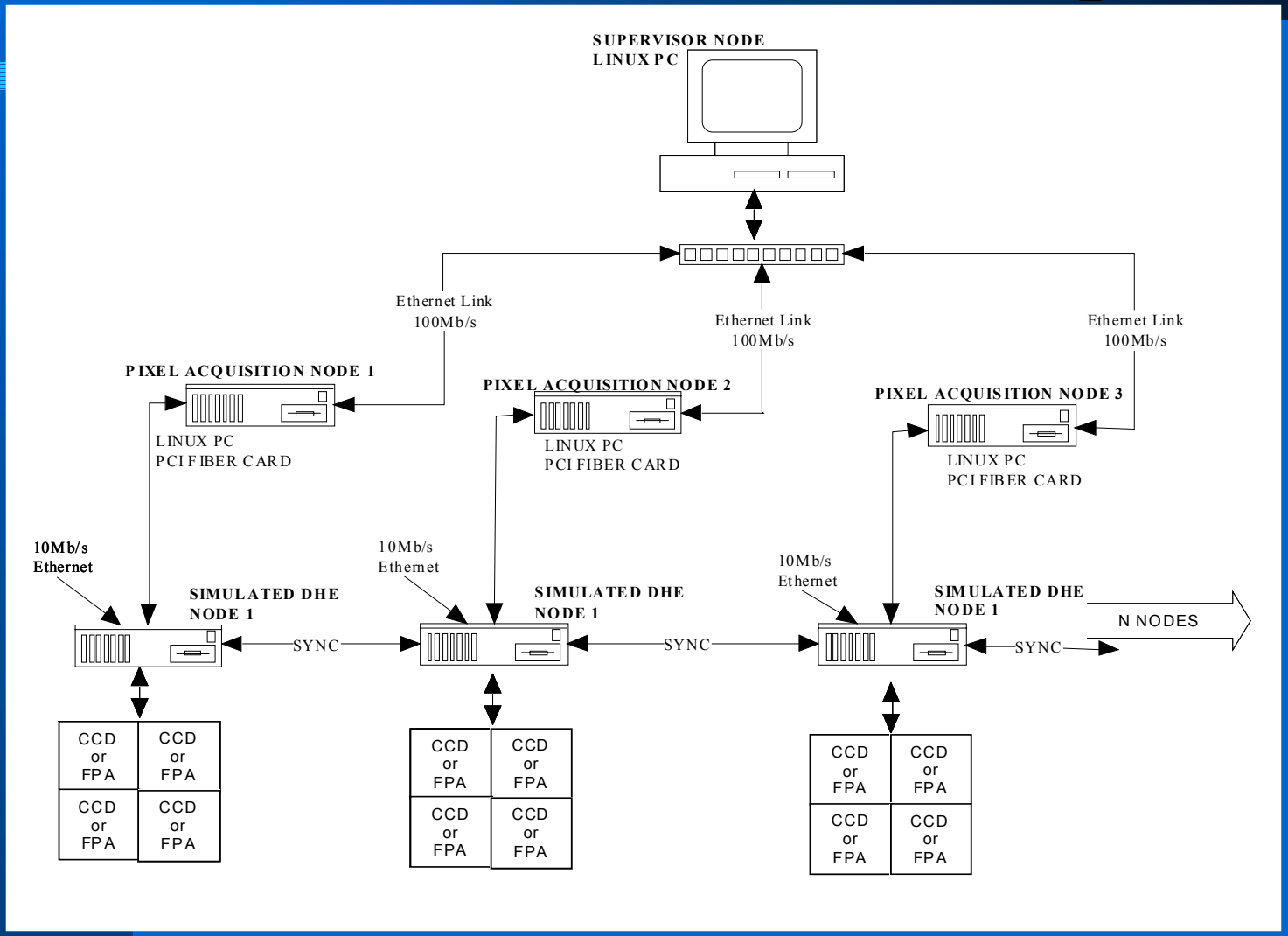

Thermal Considerations

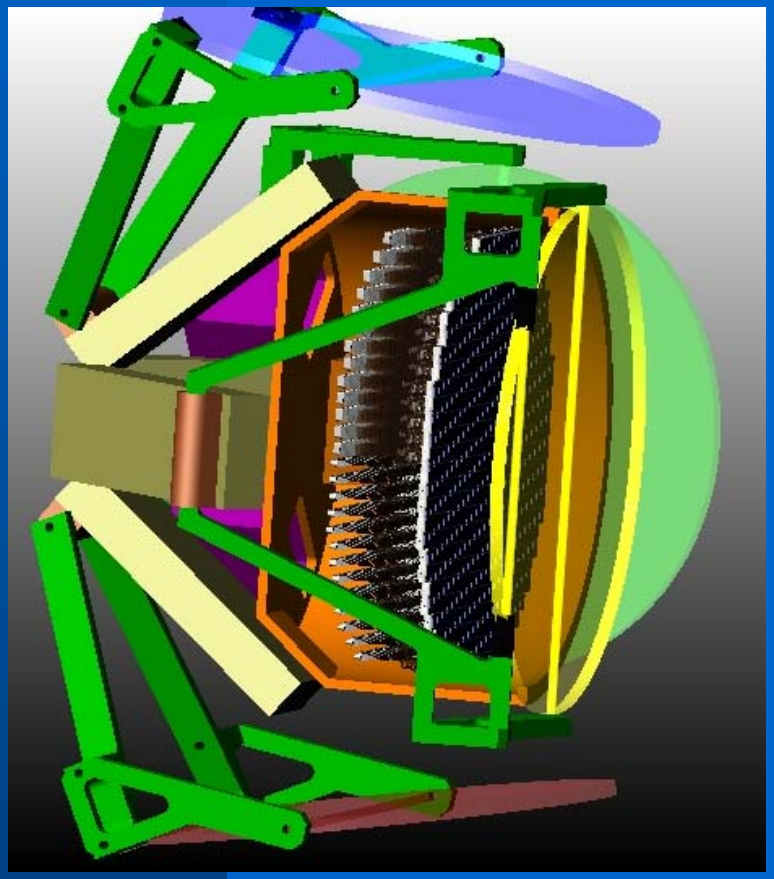

- Radiative losses through dewar window ~ 50 – 80W
- Conductive losses through electrical interconnects
- Internal power dissipation of devices and interface circuitry
- Convective losses through xenon gas ~ 100 – 150W
- Evaluating cryocooler technology and thermoelectric

Spiral Development Lifecycle Model

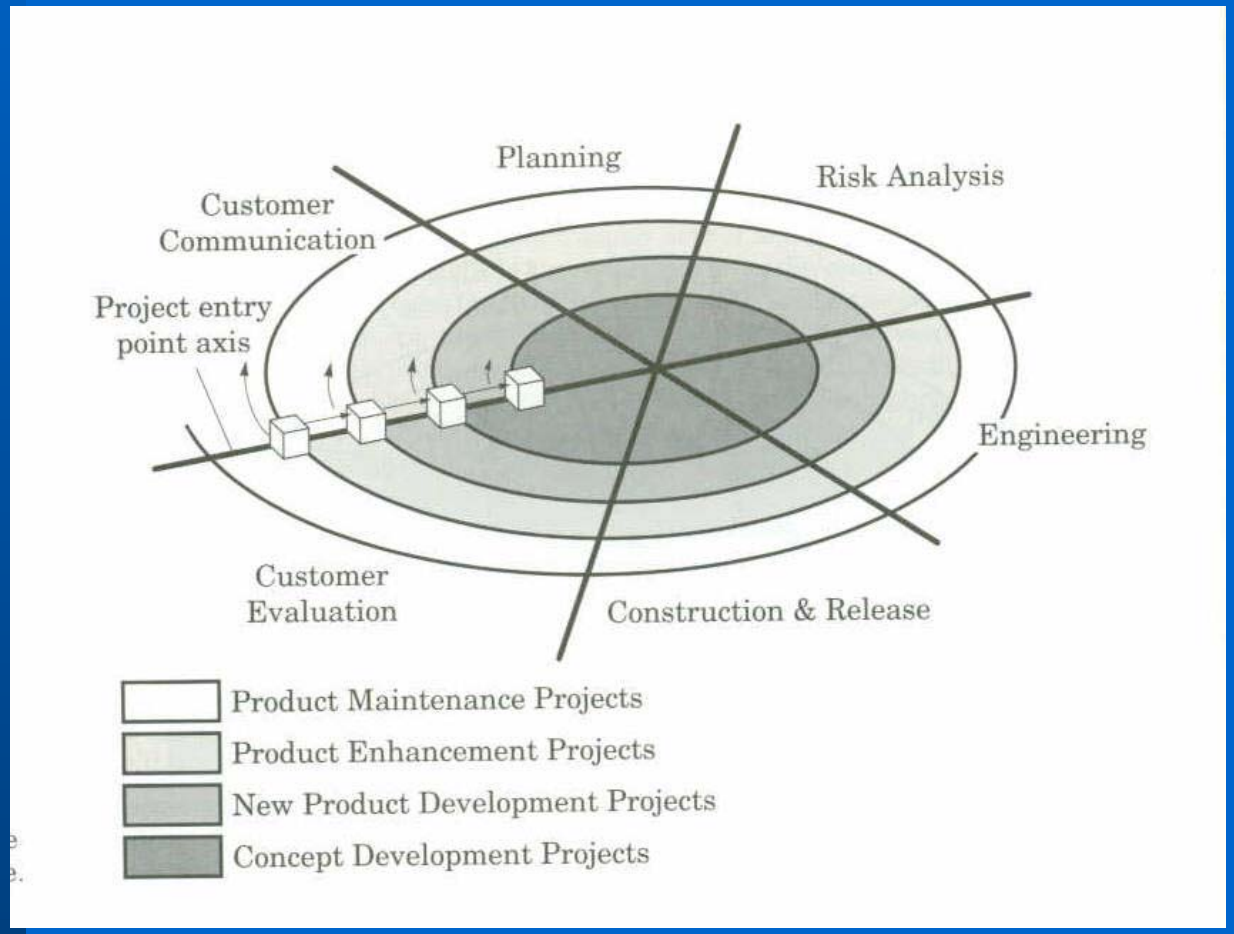

Risk Management

- 4 Step Method
  1) Identify 2) Evaluate 3) Avoid 4) Mitigate

- Continuous risk management process throughout project lifecycle.

Maslow's Model Applied to Projects

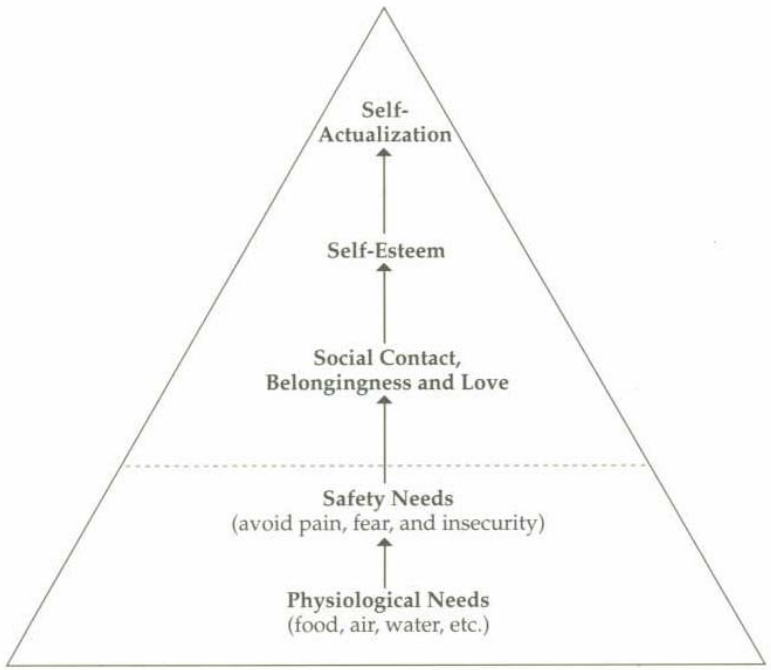

FIGURE 1-1 *Maslow's human need hierarchy. Lower level needs must be satisfied before*

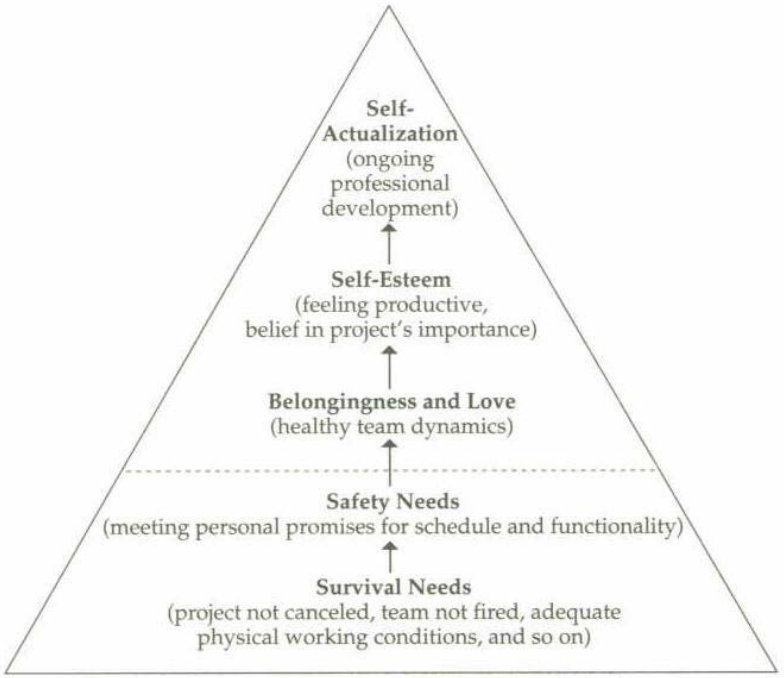

FIGURE 1-2 *Software project need hierarchy. Needs of the project are only approximately the same as the needs of the project's participants.*