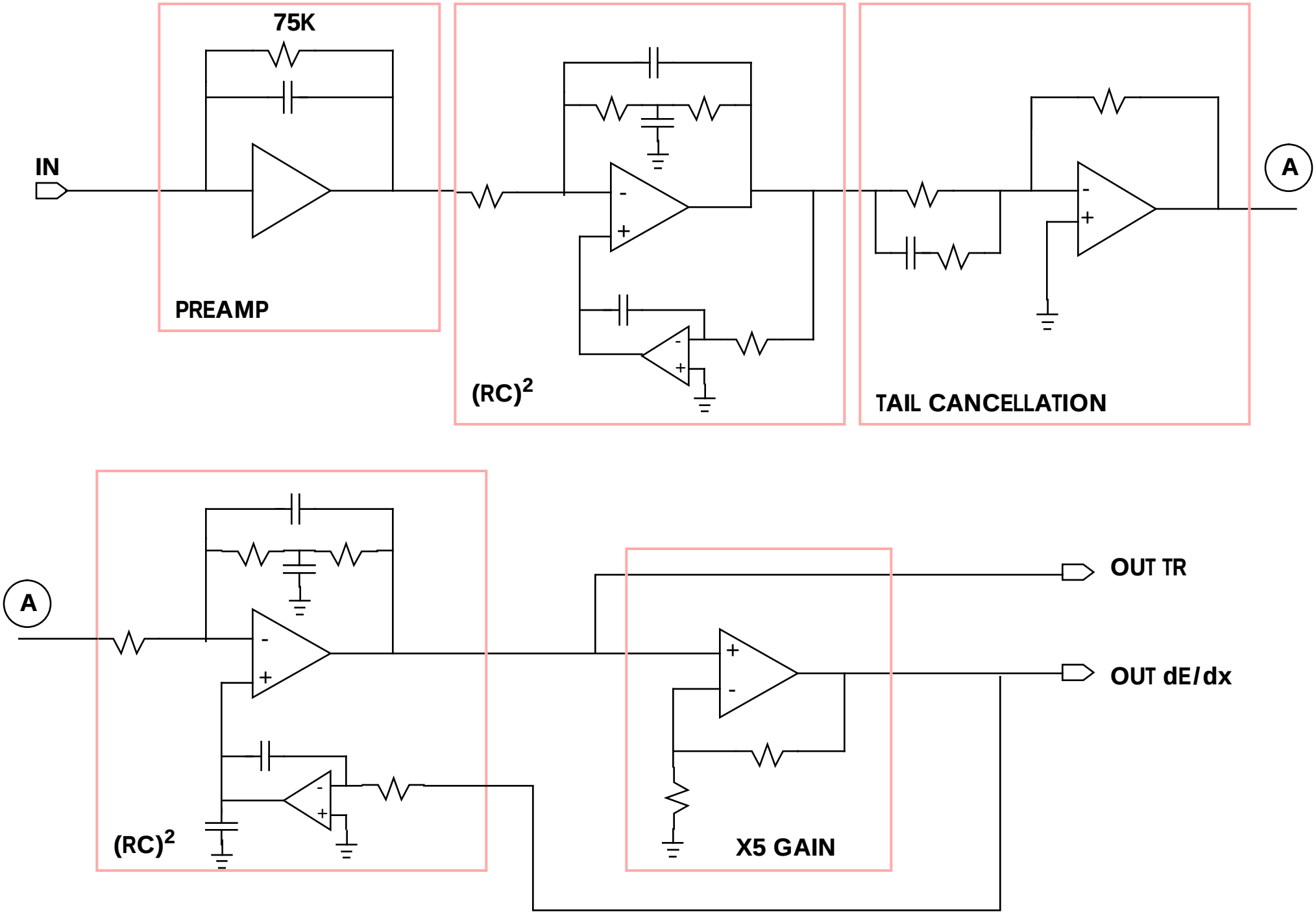
75K
IN
PREAMP
(RC)2
TAIL CANCELLATION
A
A
(RC)2
X5 GAIN
OUT TR
OUT dE/dx