Lecture 40

- CMOS LNAs
- CMOS mixers
    - Current Modulators
    - Voltage Modulators

Low Noise Amplifier Design

Desired Char.

- **High Gain**
- **Low Noise Contribution (NF < 2.0dB)**
- **Input Impedance Matched to the Source Impedance to reduce the effect of reflections.**

MOSFET LNA Design

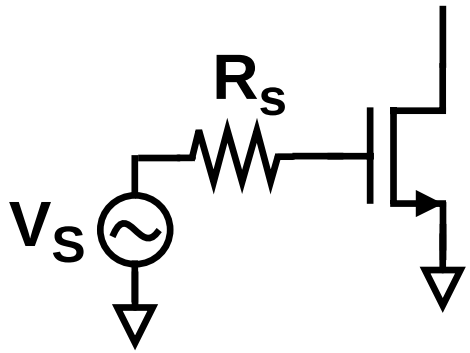

Small Signal Model

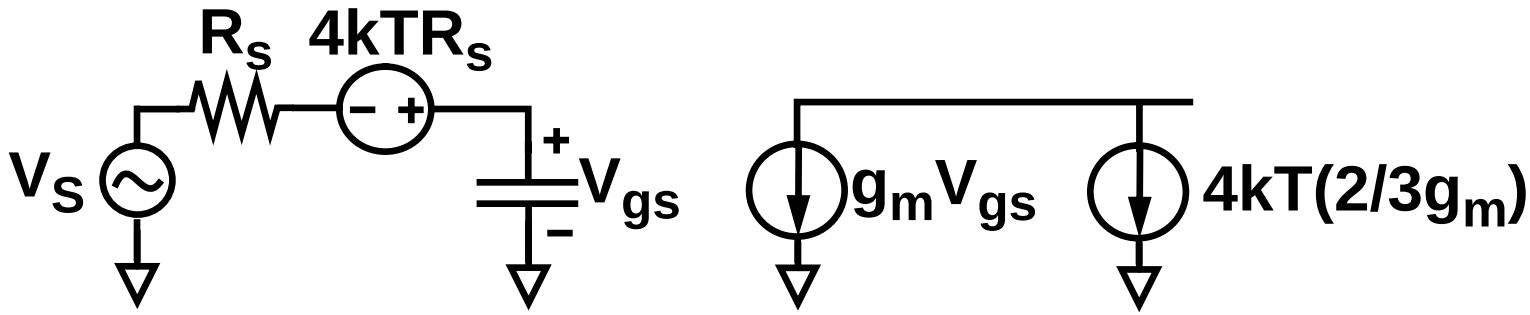

Model Assumes

1) $r_g = 0$
2) $r_o = \infty$
3) $C_{gd} = 0$

$$NF = 1 + \frac{4kT(2/3g_m)}{4kTR_s g_m^2 (1 + \omega^2/(R_s C_{gs})^2)^2}$$

$$NF = 1 + \frac{2/3}{g_m R_s} + (2/3 g_m R_s)\left(\frac{\omega^{2}{}^{2}}{\omega_t^2}\right)$$

where

$$\boxed{\omega_t = \frac{g_m}{C_{gs}}}$$

Assumes : $\omega \ll \omega_t$

Want $g_m R_s \gg 2/3$

$R_s = 50\Omega$

$g_m \gg \frac{1}{50} \Rightarrow$ **Very High Power !**

- g_m / I_D **ratio lower as compared to other tech... Bipolar, GaAs.**
- **CMOS has a lower** f_t, ω_t **compared to other tech.**

Impedance Matching

Common Methods for Impedance Matching

1) **Resistive Termination**
2) **Series-Shunt FB**
3) **Inductor Degeneration**

Resistive Termination

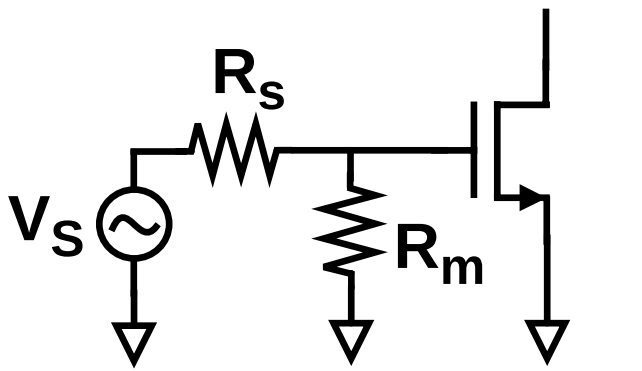

$$F = (R_m + R_s)/R_s$$

$$NF = 10\log(2) = 3dB$$

Best that can be done

Shunt-Series FB

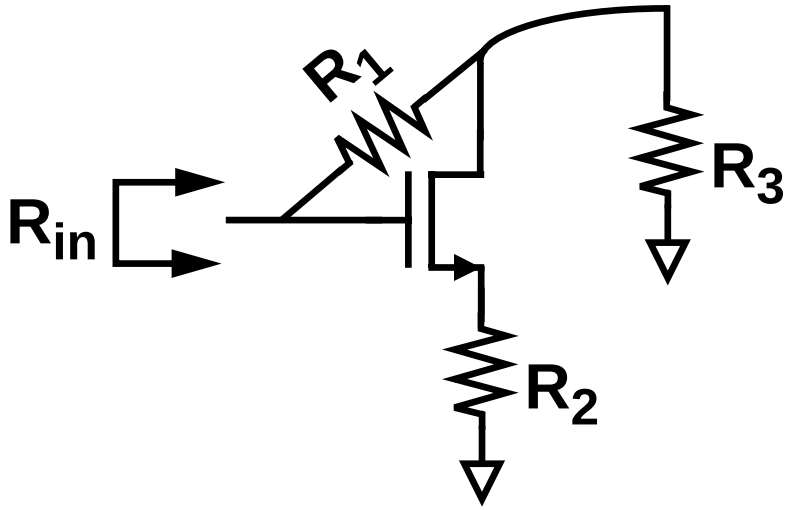

- **Broadband Amp.**
- **Tends to be Noisy**

Table 1: LNAs using Series Shunt Feedback

Author	Publication	NF	Carrier Freq.	Power	Technology
S.Sheng et al.	ISSCC ‘96	7.0 dB	900 MHz	36 mW	1μm CMOS
N.Sheng et al.	IEEE μwave letter	5.7 dB	1 GHz	115mW	GaAs

Inductor Degeneration

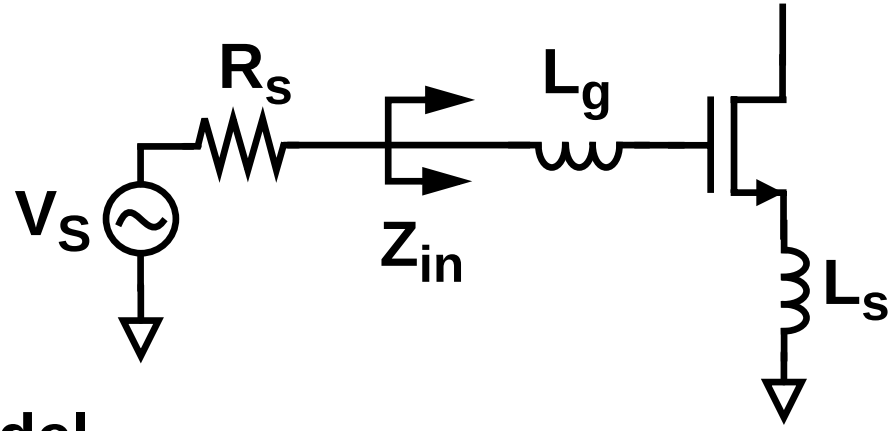

Small Signal Model

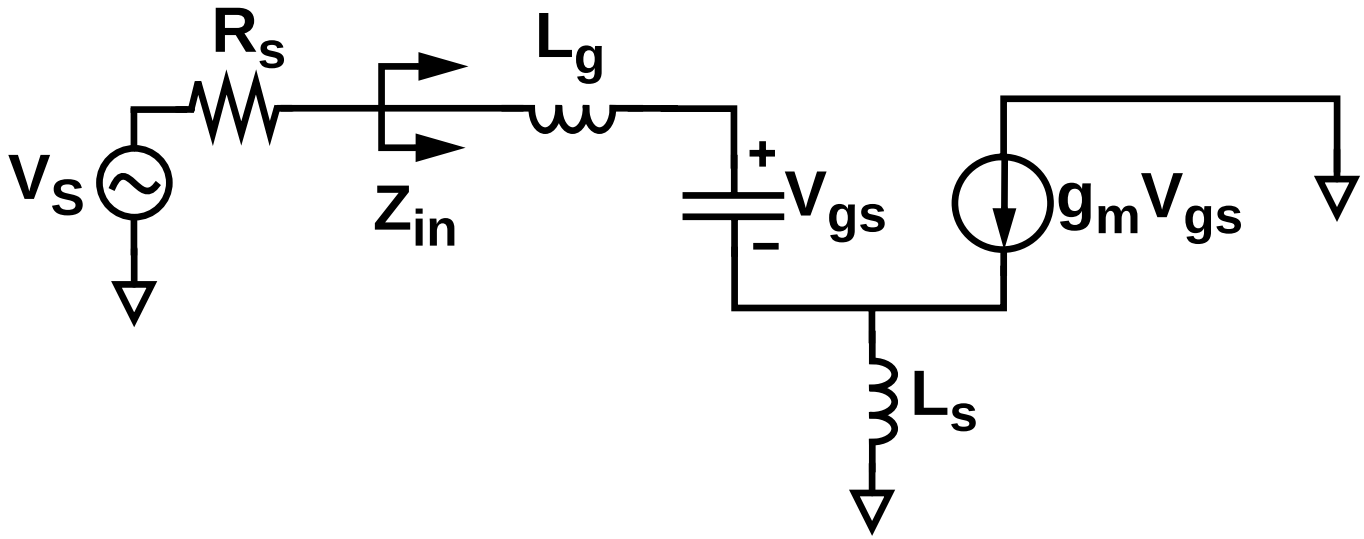

- **Want Z_{in} to Match R_s**

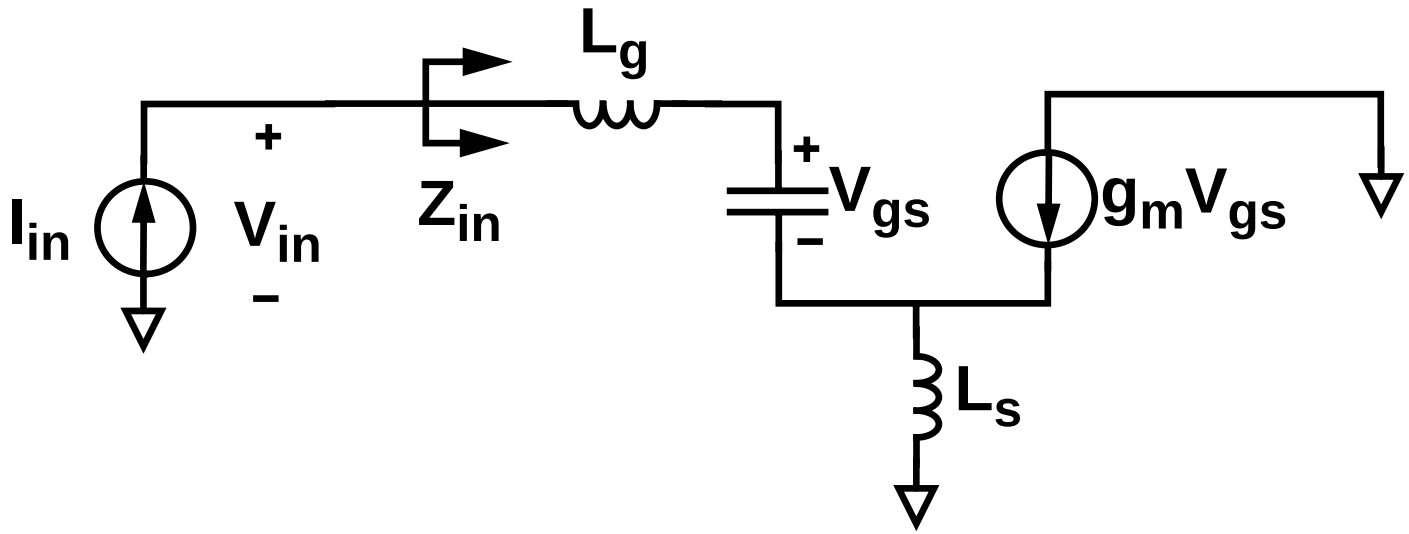

$$V_{in}(s) = I_{in}(sL_g) + I_{in}\left(\frac{1}{sC_{gs}}\right) + \left(I_{in} + g_m I_{in}\left(\frac{1}{sC_{gs}}\right)\right)sL_s$$

$$Z_{in}(s) = \frac{V_{in}}{I_{in}} = \left(\left(\frac{1}{sC_{gs}}\right) + (sL_g + sL_s) + g_m\frac{sL_s}{sC_{gs}}\right)$$

$$= \frac{1}{sC_{gs}} + sL_g + sL_s + g_m\frac{L_s}{C_{gs}}$$

Matching Criteria

$$\boxed{C_{gs} = \frac{1}{L_s + L_g}} \qquad \boxed{g_m\frac{L_s}{C_{gs}} = R_s}$$

Now look at the effective transconductance (G_m)

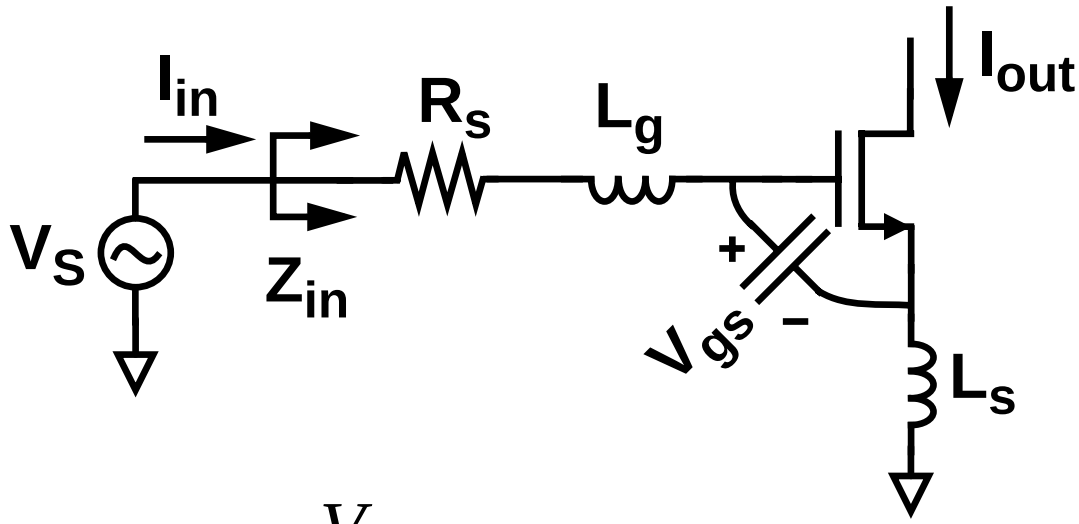

$$I_{in} = \frac{V_s}{Z_{in}}$$

$$I_{out} = I_{in} \cdot \frac{1}{sC_{gs}} \cdot g_m$$

$$G_{meff} = \frac{I_{out}}{V_s} = \frac{1}{sC_{gs}} \left(\frac{g_m}{s(L_s + L_g) + \frac{1}{sC_{gs}} + \frac{g_m}{C_{gs}} L_s + R_s} \right)$$

$$G_{meff} = \frac{g_m}{sC_{gs}\left(\frac{g_m}{C_{gs}}L_s + R_s\right)}$$

Remember: $\omega_T = \frac{g_m}{C_{gs}}$

$$\boxed{G_{meff} = \frac{\omega_T}{\omega(R_s + \omega_T L_s)}}$$

Review of Series RLC Circuits

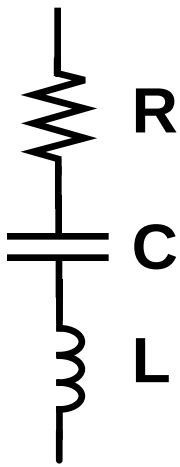

$$Q = \frac{|Z_c|}{R} \qquad Q = \frac{|Z_L|}{R}$$

$$Q = \frac{\omega L}{R} \qquad Q = \frac{1}{\omega C R}$$

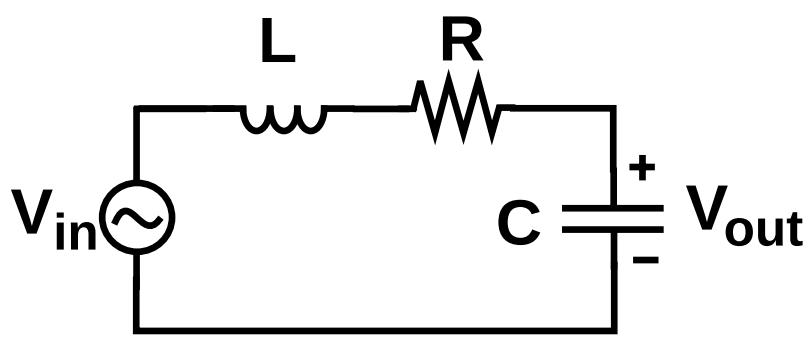

$$\frac{V_{out}}{V_{in}} = \frac{\frac{1}{j\omega C}}{j\omega L + R + \frac{1}{j\omega C}}$$

$$\frac{V_{out}}{V_{in}} = \frac{\frac{1}{j\omega C}}{j\omega L + R + \frac{1}{j\omega C}}$$

$$\omega \approx \omega_o$$

$$\boxed{\frac{V_{out}}{V_{in}} = Q}$$

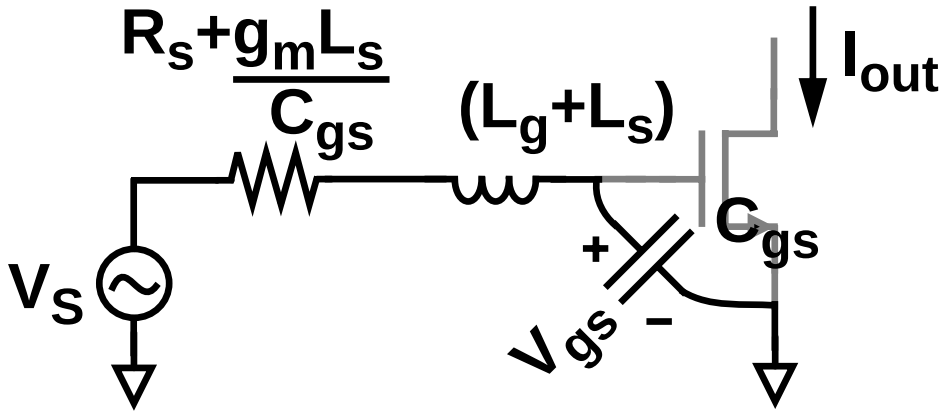

$$V_{gs} = Q_{in} \cdot V_s$$

$$\boxed{G_{meff} = g_m \cdot Q_{in}}$$

$$\boxed{NF = 1 + \gamma \frac{1}{R_s} \frac{1}{g_m} \frac{1}{Q_{in}^2}}$$

Low Noise Amplifier

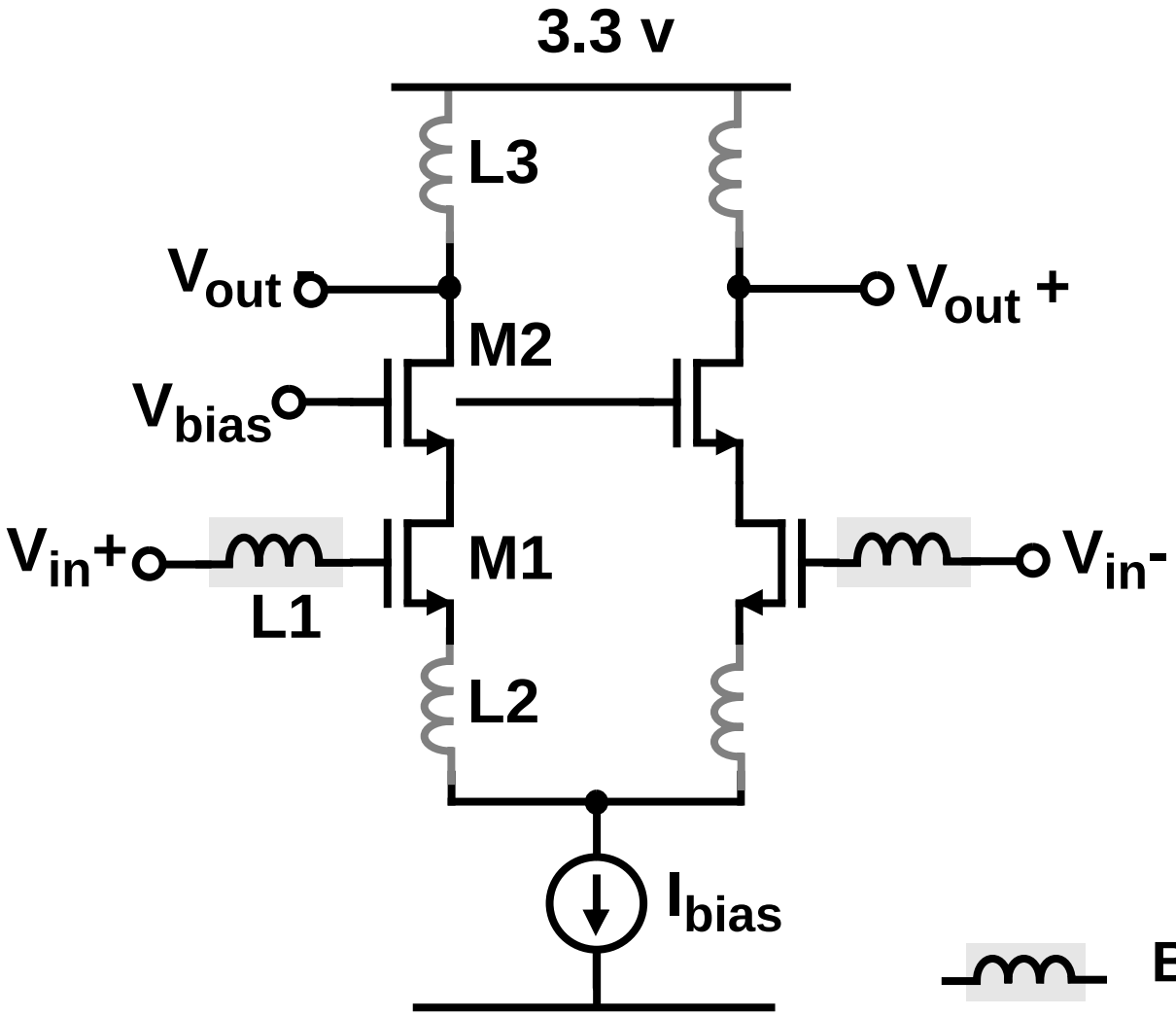

- Narrowband tuned
- NF ~ $\frac{1}{g_{m1}}\frac{1}{Q^2}$

Measured Data

	L2	L3
L (nH)	0.8	6.5
Q@1.9GHz	4	3.7
f_{self} (GHz)	16	3.7

Bondwire Inductors

On-Chip Spiral Inductors

Inductors in Silicon ICs

Aluminum Spirals

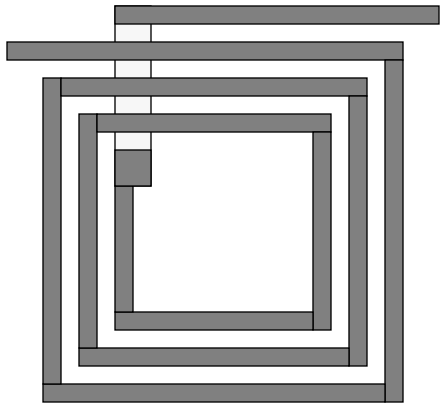

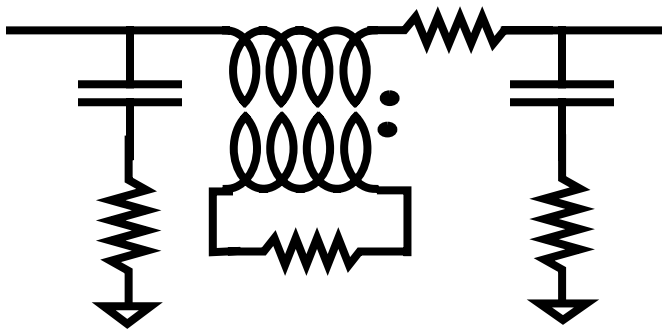

- L=1-10nH
- Q=4-8@2Ghz
- f_{self}~3-10Ghz

Bond Wires

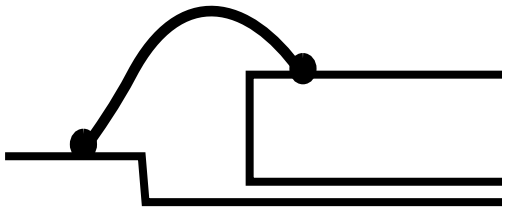

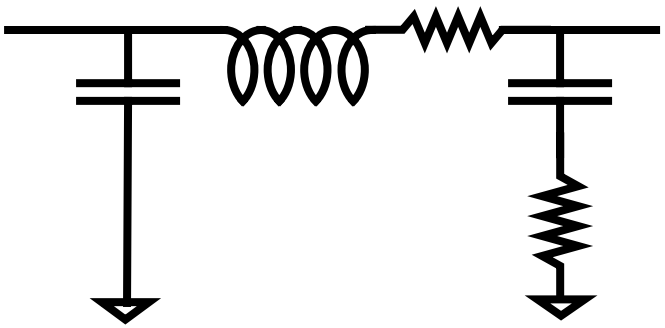

- L=1-5nH
- Q=20-40@2Ghz

Alternatives for High-Q Resonators in Si ICs

- Standard aluminum spirals of bond wires for inductance
- Etched cavities for improved self-resonance
- Plated-up thick metal for higher Q inductors
- Micromachined structures for variable capacitors
- Compatible on-chip acoustic resonators, etc.

Silicon-Etched Low-Cap Inductor Structure

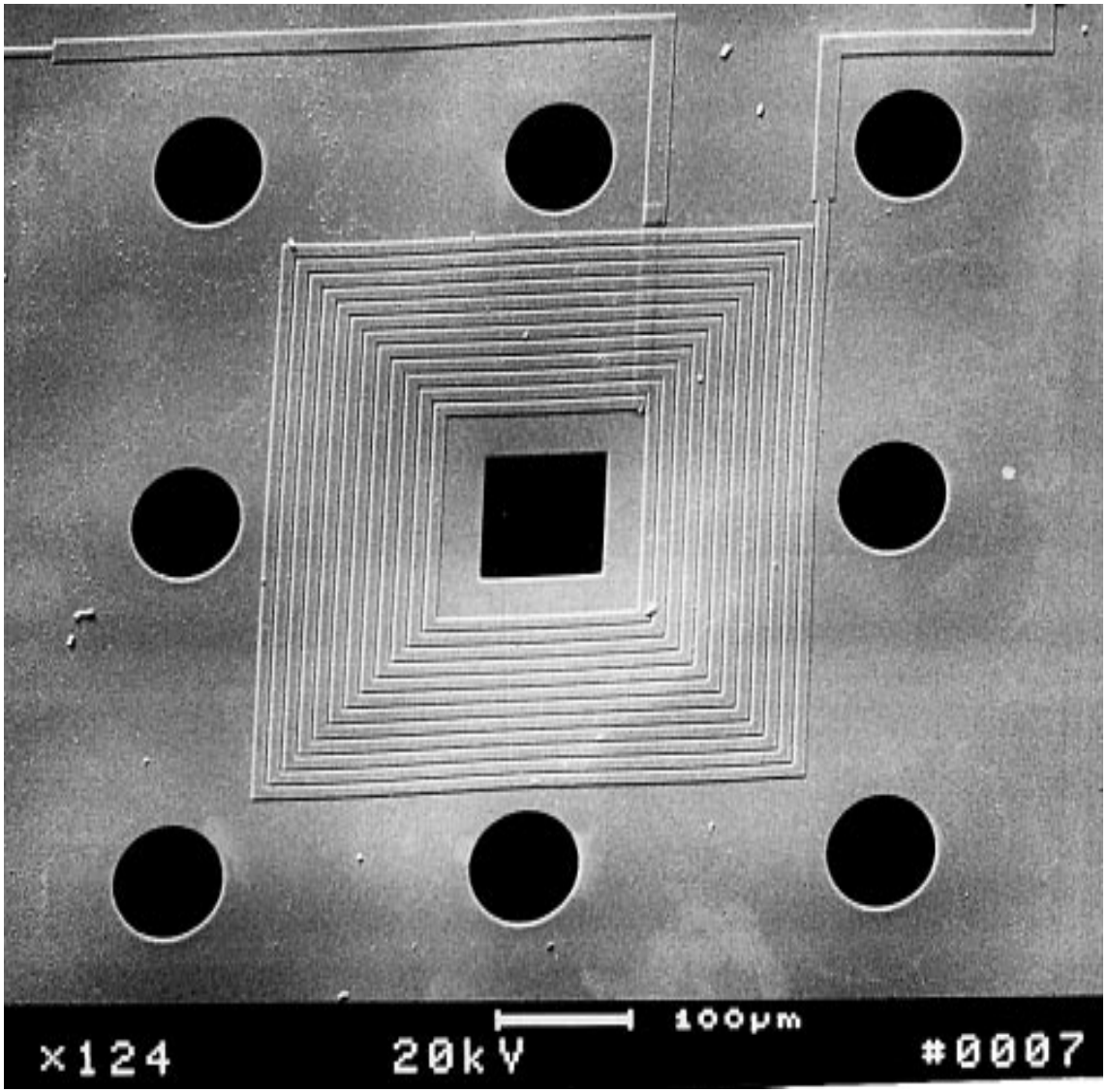

Abidi, et al
UCLA

Silicon Etching in the UCLA Transceiver

Transceiver Chip in Final Form

After selective removal of substrate to lower capacitance ...

... under inductors ...

... and under long RF interconnects

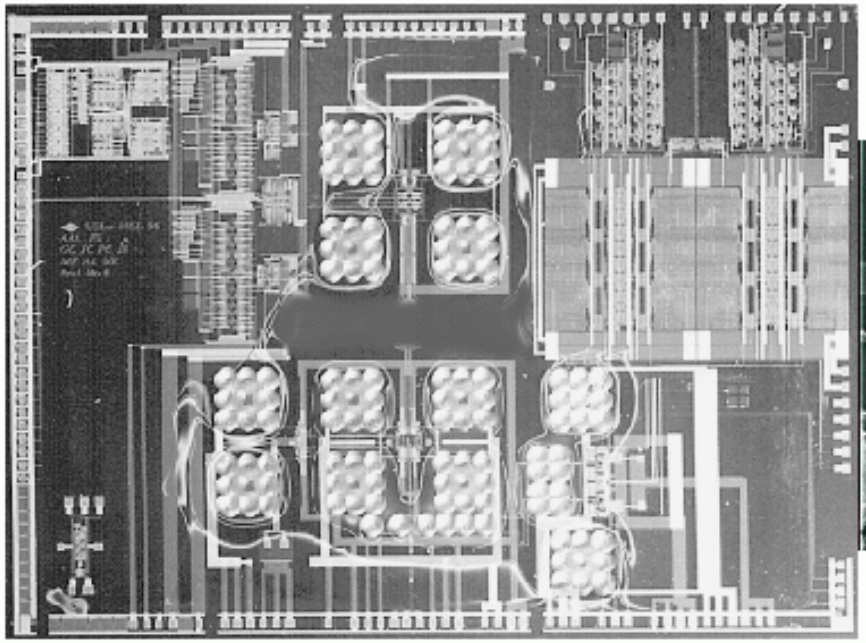

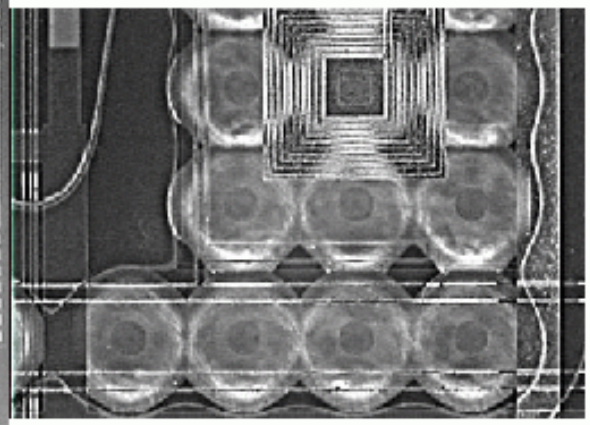

Useful trench isolation between TX and RX, digital and sensitive analog circuits

CMOS Mixers

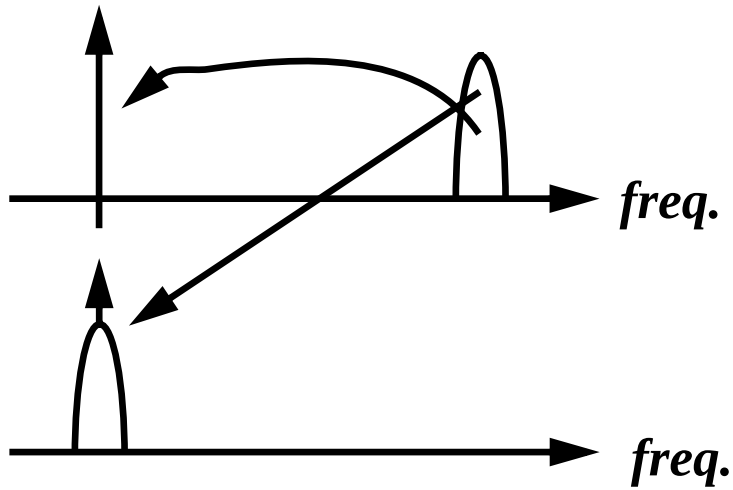

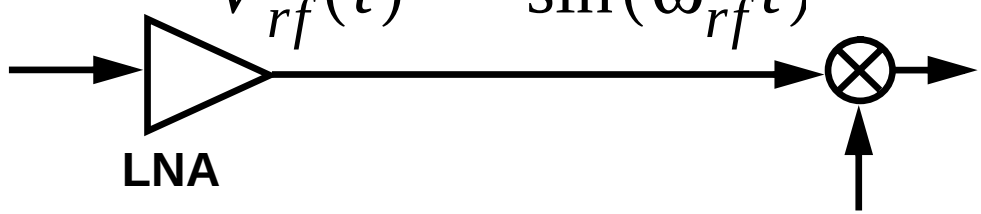

$$V_{rf}(t) = \sin(\omega_{rf} t)$$

$$\frac{1}{2}[\sin(\omega_{rf} - \omega_{LO})t + \sin(\omega_{rf} + \omega_{LO})t]$$

$$V_{LO}(t) = \sin(\omega_{LO} t)$$

Issues in Mixer Design

- Conversion Gain
- Distortion

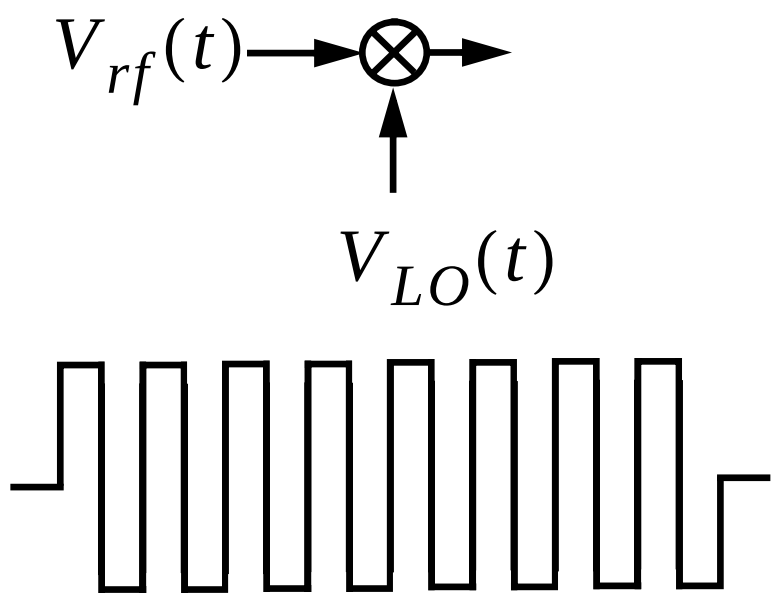

Review of Fourier Series

$$x(t) = \sum_{k=-\infty}^{+\infty} a_k e^{jk\omega_o}$$

$$a_k = \frac{1}{T_o}\int_{T_o} x(t) e^{-jk\omega_o t} dt$$

Simple Current Switching Mixer

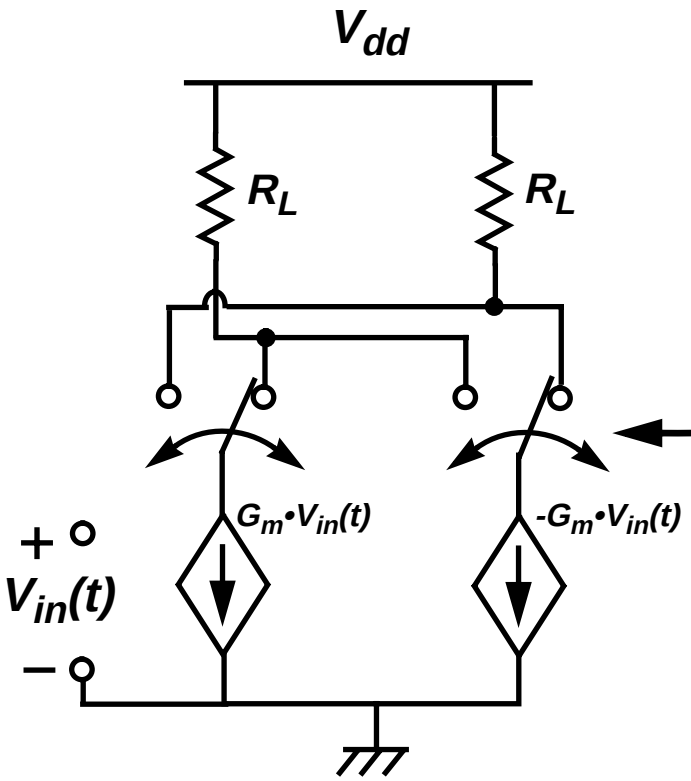

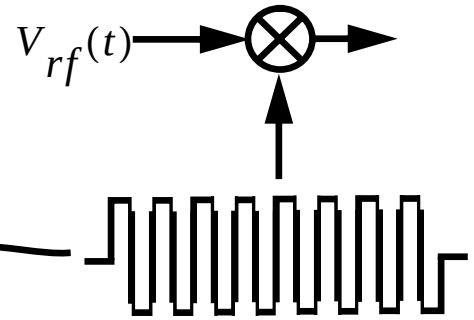

When switches are in one position:

$$A_v = G_m \cdot R_L$$

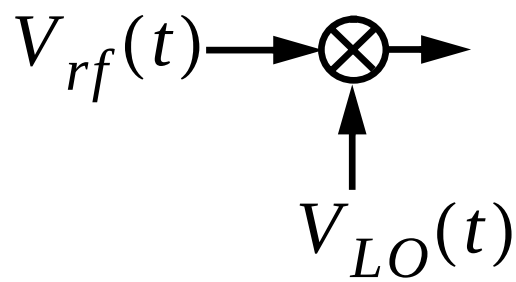

Represent the LO with the following waveform

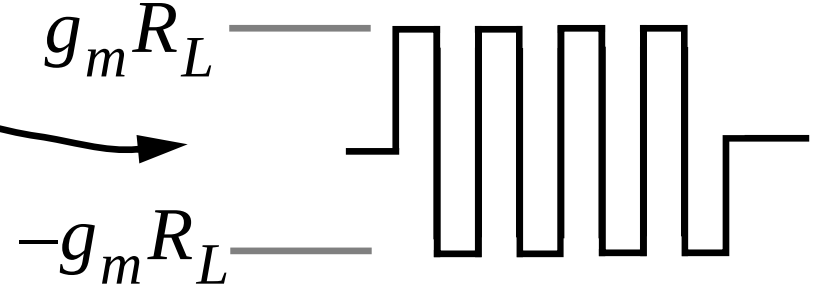

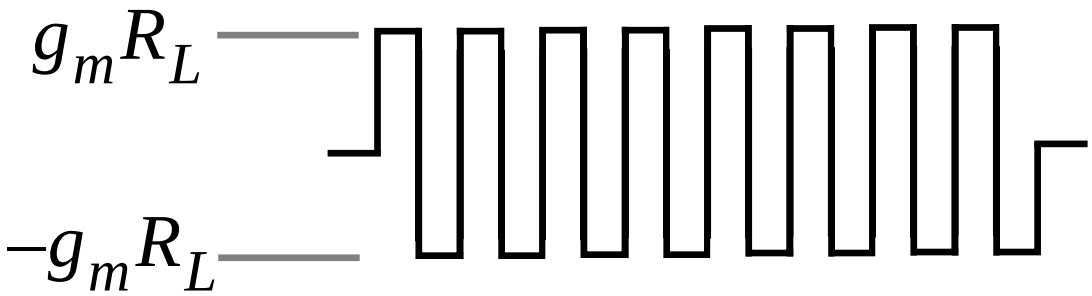

$$V_{LO}(t) = (g_m R_L) \cdot \frac{4}{\pi} \sum_{k=1}^{\infty} \left[\frac{\sin(k\pi/2)}{k} \cos(k\omega_{LO} t) \right]$$

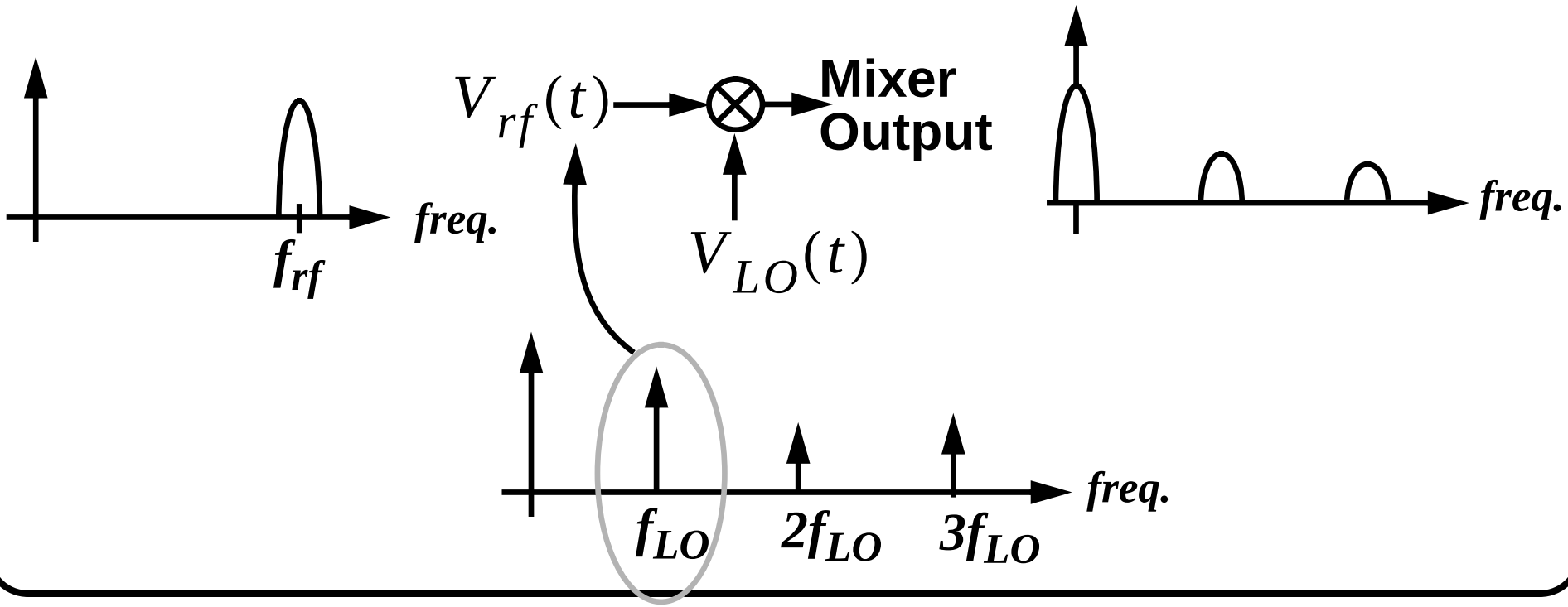

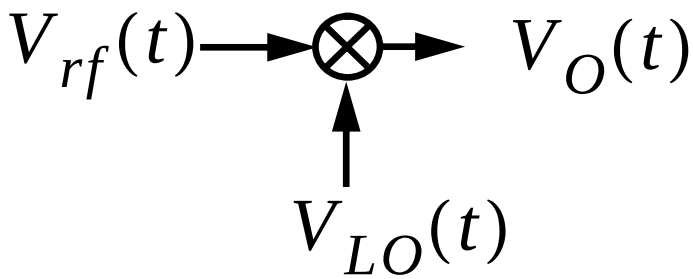

$$V_{rf} = V_{rf}\cos(\omega_{rf}t)$$

$$V_o(t) = V_{rf}(t)\cdot V_{LO}(t)$$

$$= g_m R_L\left(\frac{4}{\pi}\right)[\cos(\omega_{LO}t) - \cos(3\omega_{LO}t)\ldots]\cdot V_{rf}\cos(\omega_{rf}t)$$

$$V_o(t) = g_m R_L\left(\frac{4}{\pi}\right)\left[\frac{1}{2}\cos(\omega_{rf}-\omega_{LO})t + \frac{1}{2}\cos(\omega_{rf}+\omega_{LO})t\ldots\right]$$

$$\boxed{\frac{V_o(t)}{V_{rf}(t)} \approx g_m R_L\left(\frac{2}{\pi}\right)}$$

The conversion can be further approximated in CMOS mixers by averaging the gain over one period of the local oscillator.

$$A_v = g_m R_L \left(\frac{2}{\pi}\right)\left(1 - \frac{\sqrt{2}(V_{gs} - V_t)_{sw}}{\pi V_{LO}}\right)$$

where: $(V_{gs} - V_t)_{sw}$ **is bias condition of the switches when in the balanced state(equal bias current through all switches).**
V_{LO} **is the zero-to-peak voltage of the LO.**

Variable Gain Active Mixer Cell

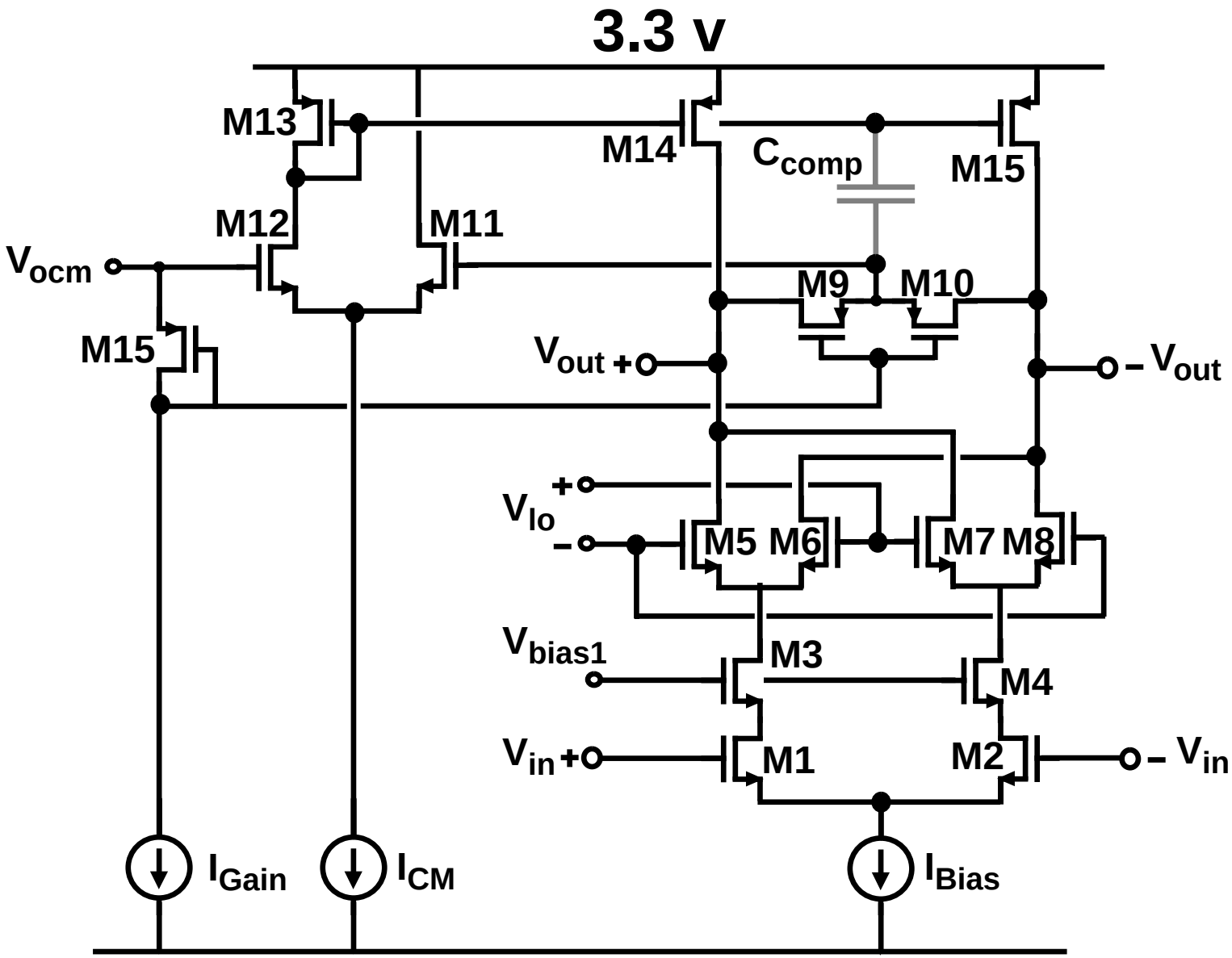
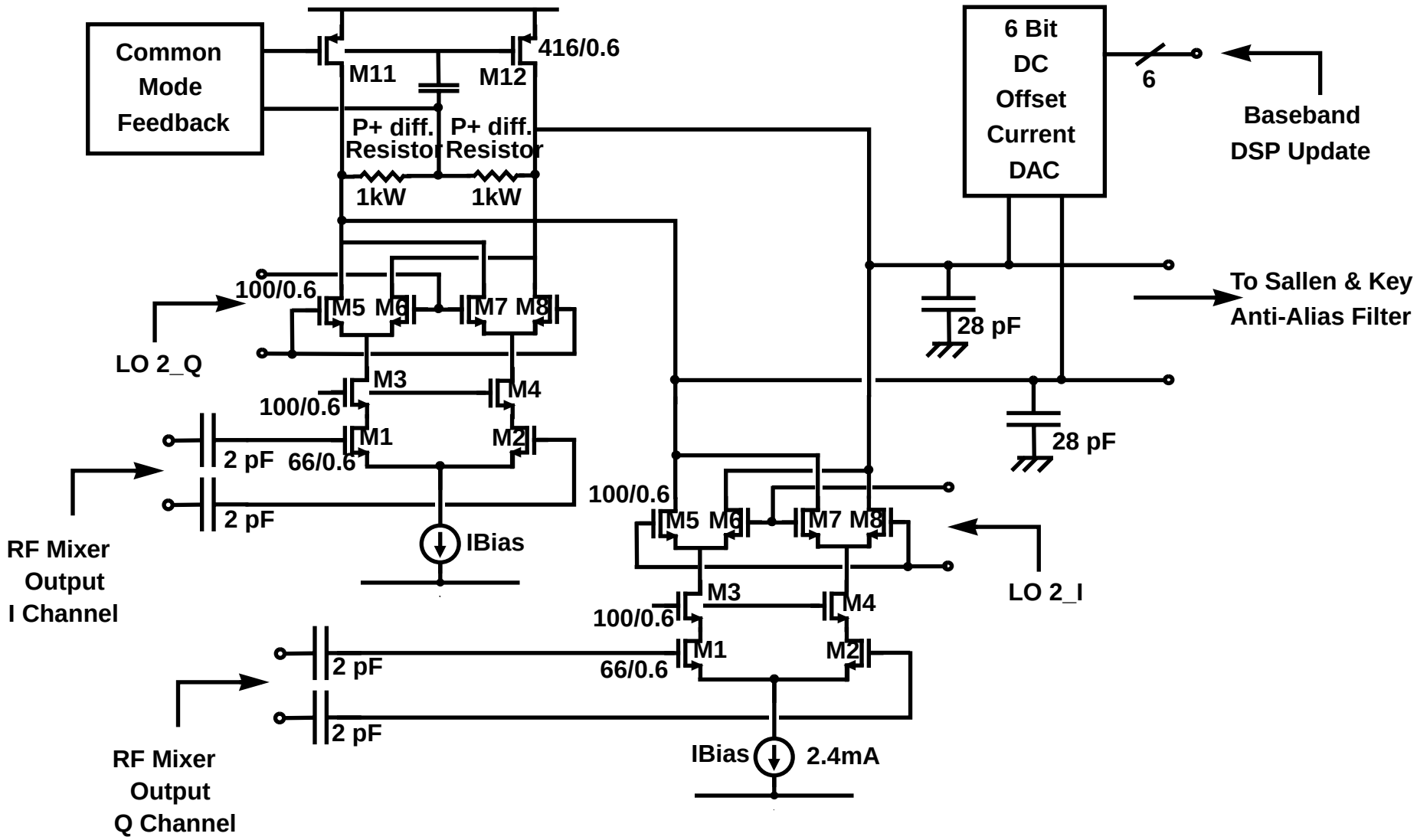
Second Mixer Stage