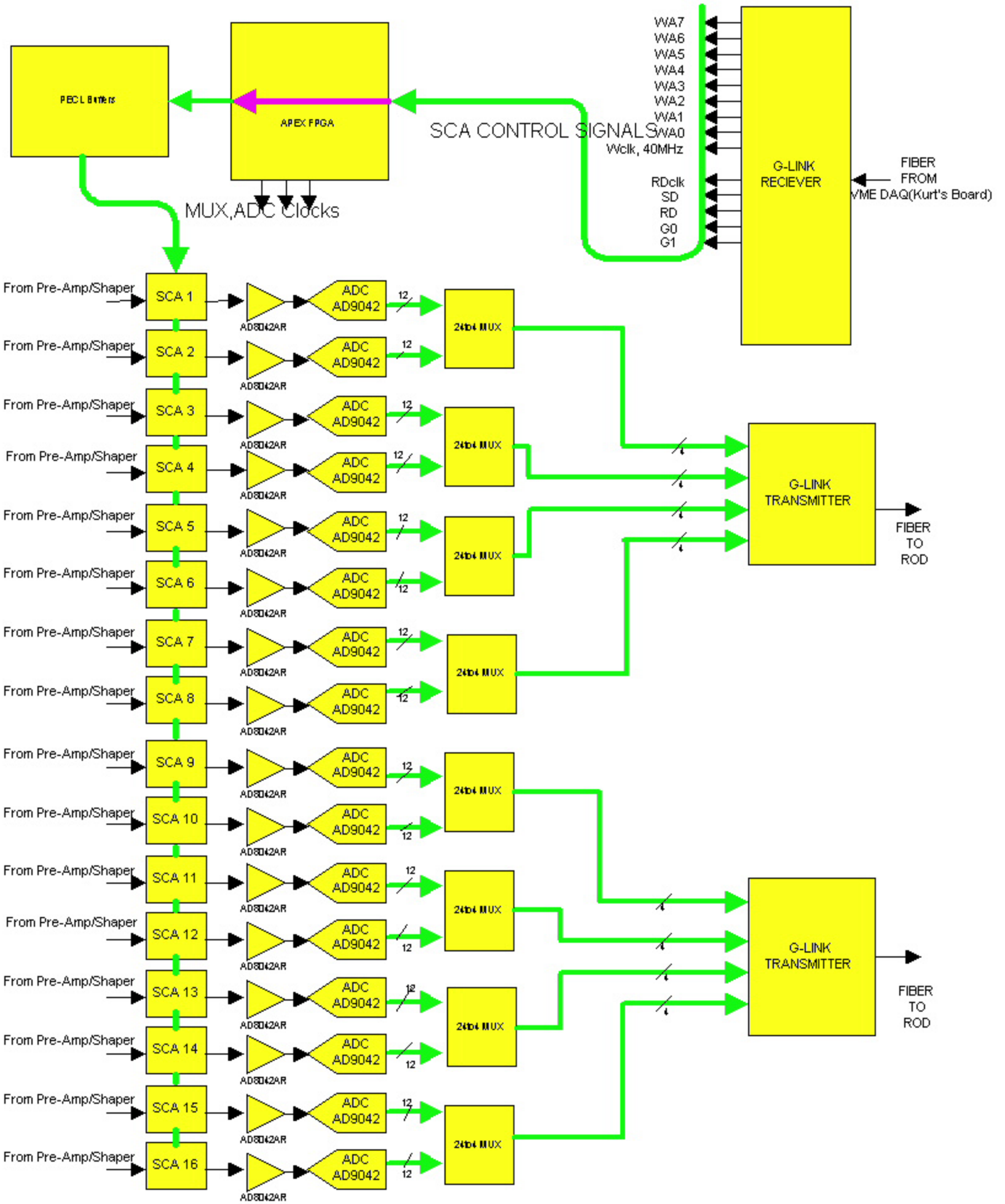ASMII-B Block Diagram