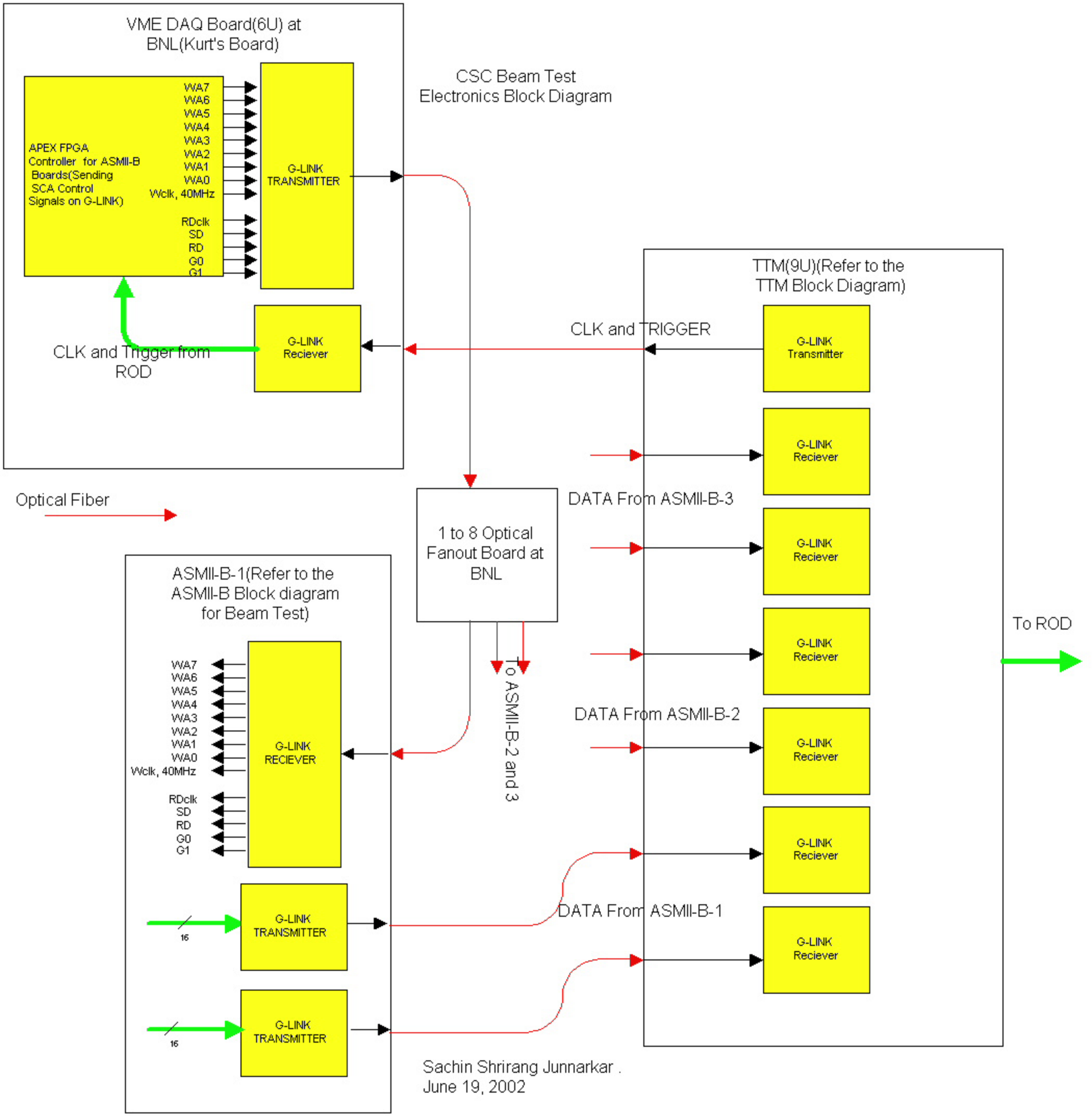
VME DAQ Board(6U) at BNL(Kurt's Board)
CSC Beam Test Electronics Block Diagram
APEX FPGA Controller for ASMII-B Boards(Sending SCA Control Signals on G-LINK)
WA7
WA6
WA5
WA4
WA3
WA2
WA1
WA0
Wclk, 40MHz
RDclk
SD
RD
G0
G1
G-LINK TRANSMITTER
G-LINK Reciever
CLK and Trigger from ROD
TTM(9U)(Refer to the TTM Block Diagram)
CLK and TRIGGER
G-LINK Transmitter
G-LINK Reciever
G-LINK Reciever
G-LINK Reciever
G-LINK Reciever
G-LINK Reciever
G-LINK Reciever
G-LINK Reciever
DATA From ASMII-B-3
DATA From ASMII-B-2
DATA From ASMII-B-1
To ROD
Optical Fiber
1 to 8 Optical Fanout Board at BNL
To ASMII-B-2 and 3
ASMII-B-1(Refer to the ASMII-B Block diagram for Beam Test)
WA7
WA6
WA5
WA4
WA3
WA2
WA1
WA0
Wclk, 40MHz
RDclk
SD
RD
G0
G1
G-LINK RECIEVER
G-LINK TRANSMITTER
G-LINK TRANSMITTER
16
16
Sachin Shrirang Junnarkar .
June 19, 2002